COVER SHEET
G0.0
FOR BLUEBEAM LABELING OCR:

PBK

PARLIER HS STADIUM REPLACEMENT

PARLIER UNIFIED SCHOOL DISTRICT
603 3rd Street
Parlier, CA 93648

DSA SUBMISSION
2026/02/09

DSA NO: 02-124002
FILE NO: 10-H12



DSA SUBMISSION

603 3rd Street
Parlier, CA 93648

PARLIER HS STADIUM REPLACEMENT

ARCHITECT

LICENSED ARCHITECT
MICHELE GARGANO
No. C-32560
RENEWAL DATE
MAR 31, 2027
STATE OF CALIFORNIA

COVER SHEET

G0.0

OWNER / REPRESENTATIVE
PARLIER UNIFIED SCHOOL DISTRICT
603 3RD ST,
PARLIER, CA 93648
T 559-646-2731

ARCHITECT
PBK ARCHITECTS, INC
7790 N PALM AVE.
FRESNO, CA 93711
T 559-448-8400

CIVIL / LANDSCAPE ENGINEER
BLAIR, CHURCH, & FLYNN
451 CLOVIS AVE.
CLOVIS, CA 93612
T 559-326-1400

STRUCTURAL ENGINEER
CORNERSTONE ENGINEERING
986 W ALLUVIAL, STE 201
FRESNO, CA 93711
T 559-320-3200

ELECTRICAL ENGINEER
HARDIN-DAVIDSON ENGINEERING
356 POLLASKY AVE. SUITE 200
CLOVIS, CA 93612
T 559-323-4995

MP ENGINEER
LAWRENCE ENGINEERING GROUP
4910 E. CLINTON WAY. SUITE 101
FRESNO, CA 93727
T 559-431-0101

SPORTS CONSULTANT
PBK SPORTS
14001 DALLAS PKWY
DALLAS, TX 75240
T 972-233-1323

BLEACHERS CONSULTANT
SOUTHERN BLEACHER COMPANY
801 5TH STREET
GRAHAM, TX 76450
T 940-549-0733

PROJECT INFORMATION G1.1

FOR BLUEBEAM LABELING/DOOR:

GENERAL

Sheet №	Sheet Name
G0.0	COVER SHEET
G1.1	PROJECT INFORMATION

CODE ANALYSIS

CA1.1	CODE ANALYSIS SITE PLAN
CA1.2	FIRE ACCESS SITE PLAN
CA2.1	EXIT ANALYSIS - BUILDINGS
CA2.2	EXIT ANALYSIS - BLEACHERS
CA3.1	SIGNAGE FLOOR PLAN
CA4.1	CALGREEN CHECKLIST (1 OF 4)
CA4.2	CALGREEN CHECKLIST (2 OF 4)
CA4.3	CALGREEN CHECKLIST (3 OF 4)
CA4.4	CALGREEN CHECKLIST (4 OF 4)

CIVIL: SITE DEVELOPMENT

CS1.0	TOPOGRAPHIC NOTES AND LEGEND
CS1.1	PARTIAL TOPOGRAPHIC SURVEY
CS1.2	PARTIAL TOPOGRAPHIC SURVEY
CS1.3	PARTIAL TOPOGRAPHIC SURVEY
CS2.1	PARTIAL DEMOLITION PLAN
CS2.2	PARTIAL DEMOLITION PLAN
CS2.3	PARTIAL DEMOLITION PLAN
CS3.1	PARTIAL SITE PLAN
CS3.2	PARTIAL SITE PLAN
CS3.3	PARTIAL SITE PLAN
CS4.1	PARTIAL HORIZONTAL CONTROL PLAN
CS4.2	PARTIAL HORIZONTAL CONTROL PLAN
CS4.3	PARTIAL HOIZONTAL CONTROL PLAN AND TABLE
CS5.1	PARTIAL GRADING PLAN
CS5.2	PARTIAL GRADING PLAN
CS5.3	PARTIAL GRADING PLAN
CS6.1	PARTIAL UTILITY PLAN
CS6.2	PARTIAL UTILITY PLAN

CIVIL: TYPICAL INFORMATION

X1.1	DETAILS
X1.2	DETAILS
X1.3	DETAILS
X1.4	DETAILS
X1.5	DETAILS

LANDSCAPE: SITE DEVELOPMENT

LS1.1	PARTIAL IRRIGATION PLAN
LS1.2	PARTIAL IRRIGATION PLAN
LS1.3	PARTIAL IRRIGATION PLAN
LS1.4	IRRIGATION DETAILS
LS1.5	IRRIGATION DETAILS
LS1.6	IRRIGATION DETAIL
LS2.1	PARTIAL PLANTING PLAN
LS2.2	PARTIAL PLANTING PLAN
LS2.3	PARTIAL PLANTING PLAN
LS2.4	PLANTING DETAILS

ARCHITECTURAL: SITE

AS1.1	OVERALL SITE PLAN
AS2.1	ENLARGED SITE PLAN
AS3.1	SITE DETAILS
AS3.2	SITE DETAILS

ARCHITECTURAL: BUILDING M

AM1.1	BUILDING M - FLOOR PLAN
AM1.2	BUILDING M - ANNOTATED FLOOR PLAN
AM2.1	BUILDING M - REFLECTED CEILING PLAN
AM3.1	BUILDING M - ROOF PLAN
AM4.1	BUILDING M - EXTERIOR ELEVATIONS
AM5.1	BUILDING M - BUILDING SECTIONS
AM6.1	BUILDING M - INTERIOR ELEVATIONS

ARCHITECTURAL: BUILDING N

AN1.1	BUILDING N - FLOOR PLAN
AN1.2	BUILDING N - ANNOTATED FLOOR PLAN
AN2.1	BUILDING N - REFLECTED CEILING PLAN
AN3.1	BUILDING N - ROOF PLAN
AN4.1	BUILDING N - EXTERIOR ELEVATIONS
AN5.1	BUILDING N - BUILDING SECTIONS
AN6.1	BUILDING N - INTERIOR ELEVATIONS
AN6.2	BUILDING N - INTERIOR ELEVATIONS
AN5.1	BUILDING N - BUILDING SECTIONS
AN6.1	BUILDING N - INTERIOR ELEVATIONS
AN6.2	BUILDING N - INTERIOR ELEVATIONS

ARCHITECTURAL: TYPICAL INFORMATION

AX2.1	WALL TYPES & TYP. FRAMING DETAILS
AX3.1	EXTERIOR DETAILS
AX3.2	EXTERIOR DETAILS
AX3.3	EXTERIOR DETAILS
AX3.4	EXTERIOR DETAILS
AX3.5	EXTERIOR DETAILS
AX4.1	INTERIOR DETAILS
AX4.2	INTERIOR DETAILS
AX4.3	INTERIOR DETAILS
AX4.4	INTERIOR DETAILS
AX5.1	OPENING SCHEDULES
AX5.2	HOLLOW METAL FRAME DETAILS
AX5.4	HARDWARE DETAILS
AX6.1	ARCHITECTURAL WOODWORK
AX7.1	INTERIOR FINISH SCHEDULES

STRUCTURAL: TYPICAL INFORMATION

SX0.1	PROJECT INFORMATION
SX0.2	TESTING AND SPECIAL INSPECTIONS
SX1.1	TYPICAL DETAILS No. 1
SX1.2	TYPICAL DETAILS No. 2
SX1.3	TYPICAL DETAILS No. 3
SX1.4	TYPICAL DETAILS No. 4
SX1.5	TYPICAL DETAILS No. 5
SX1.6	TYPICAL DETAILS No. 6
SX3.1	SITE DETAILS
SX4.1	FOUNDATION DETAILS
SX4.2	ROOF FRAMING DETAILS
SX4.3	ROOF FRAMING DETAILS No. 2

STRUCTURAL: BUILDING M

SM2.1	FOUNDATION PLAN - BUILDING M
SM2.2	CEILING FRAMING PLAN - BUILDING M
SM2.3	ROOF FRAMING PLAN - BUILDING M
SM3.1	BUILDING SECTIONS No.1 - BUILDING M
SM3.2	BUILDING ELEVATIONS No.1 - BUILDING M
SM3.3	BUILDING ELEVATIONS No.2 - BUILDING M

STRUCTURAL: BUILDING N

SN2.1	FOUNDATION PLAN - BUILDING N
SN2.2	CEILING FRAMING PLAN - BUILDING N
SN2.3	ROOF FRAMING PLAN - BUILDING N
SN2.4	DEDUCT ALTERNATE #3
SN3.1	BUILDING SECTIONS No. 1 - BUILDING N
SN3.2	BUILDING SECTIONS No. 2 - BUILDING N
SN3.3	BUILDING ELEVATIONS No.1 - BUILDING N
SN3.4	BUILDING ELEVATIONS No.2 - BUILDING N

MECHANICAL: BUILDING M

MM1.1	BUILDING M - MECHANICAL FLOOR PLAN
MM2.1	BUILDING M - MECHANICAL ROOF PLAN

MECHANICAL: BUILDING N

MN1.1	BUILDING N - MECHANICAL FLOOR PLAN
MN1.2	BUILDING N - MECHANICAL FLOOR PLAN - ALT 3
MN2.1	BUILDING N - MECHANICAL ROOF PLAN
MN2.2	BUILDING N - MECHANICAL ROOF PLAN - ALT 3

MECHANICAL: TYPICAL INFORMATION

MX1.1	MECHANICAL DETAILS
MX1.2	MECHANICAL DETAILS
MX1.3	MECHANICAL DETAILS
MX2.1	MECHANICAL NOTES AND SCHEDULES
MX2.2	MECHANICAL NOTES AND SCHEDULES
MX3.1	MECHANICAL BUILDING M T-24
MX3.2	MECHANICAL BUILDING M T-24
MX3.3	MECHANICAL BUILDING N T-24
MX3.4	MECHANICAL BUILDING N T-24
MX3.5	MECHANICAL BUILDING N ALT 3 T-24
MX3.6	MECHANICAL BUILDING N ALT 3 T-24

PLUMBING: BUILDING M

PM1.1	BLDG. M -PLUMBING PLAN -SEWER, VENT AND CONDENSATE
PM1.2	BLDG. M -PLUMBING PLAN -WATER AND GAS
PM2.1	BLDG. M -PLUMBING ROOF PLAN

PLUMBING: BUILDING N

PN1.1	BLDG. N -PLUMBING PLAN -SEWER, VENT AND CONDENSATE
PN1.2	BLDG. N -PLUMBING PLAN -WATER AND GAS
PN1.3	BLDG. N -PLUMBING PLAN -SEWER, VENT AND CONDENSATE - ALT 3
PN1.4	BLDG. N -PLUMBING PLAN -WATER AND GAS - ALT 3
PN2.1	BLDG. N -PLUMBING ROOF PLAN
PN2.2	BLDG. N -PLUMBING ROOF PLAN - ALT 3

PLUMBING: TYPICAL INFORMATION

PX1.1	PLUMBING DETAILS
PX1.2	PLUMBING DETAILS
PX1.3	PLUMBING DETAILS
PX1.4	PLUMBING DETAILS
PX2.1	PLUMBING SCHEDULES
PX2.2	PLUMBING NOTES & CALCS

ELECTRICAL: TYPICAL INFORMATION

EX1.0	ELECTRICAL NOTES
EX1.1	ELECTRICAL DETAILS
EX1.2	ELECTRICAL DETAILS
EX1.3	ELECTRICAL DETAILS
EX1.4	FIRE ALARM INFORMATION
EX1.5	FIRE ALARM INFORMATION
EX2.0	SOLAR INFORMATION
EX2.1	SOLAR INFORMATION
EX2.2	SOLAR INFORMATION
EX2.3	SOLAR INFORMATION
EX2.4	SOLAR INFORMATION
EX3.0	BUILDING M - T24 COMPLIANCE FORMS
EX3.1	BUILDING M - T24 COMPLIANCE FORMS
EX3.2	BUILDING N - T24 COMPLIANCE FORMS
EX3.3	BUILDING N - T24 COMPLIANCE FORMS
EX3.4	BUILDING M - T24 COMPLIANCE FORMS
EX3.5	BUILDING M - T24 COMPLIANCE FORMS ALT. BID #3
EX3.6	BUILDING M - T24 COMPLIANCE FORMS ALT. BID #3

ELECTRICAL: SITE DEVELOPMENT

ES1.0	DEMO ELECTRICAL SITE
ES1.1	SITE POWER
ES1.2	SITE POWER
ES1.3	SITE DATA/COMM

ELECTRICAL: BUILDING M

EM1.0	ELECTRICAL PLANS - BUILDING M
EM1.1	ELECTRICAL PLANS - BUILDING M

ELECTRICAL: BUILDING N

EN1.0	ELECTRICAL PLANS - BUILDING N
EN1.1	ELECTRICAL PLANS - BUILDING N
EN1.2	ELECTRICAL PLANS - BUILDING N ALT. BID #3

ELECTRICAL: PRESSBOX

EP1.0	ELECTRICAL PLANS - PRESSBOX
MT1	NOTES, FOUNDATION DETAIL

ELECTRICAL: MUSCO LIGHTING

MS1	POLE DETAIL
MD2	ATTACHMENT DETAILS

MD3 ATTACHMENT DETAILS

PLAY FIELD: SITE DEVELOPMENT

PF-1.00	Layout and Material Plan-PF-X.00
PF-1.01	Color Marking Plan-PF-X.00
PF-1.02	Surface Grading Plan-PF-4.00
PF-1.03	Subsurface Collection Plan-PF-X.00
PF-1.04	Throwing Event Layout Plan-PF-4.00
PF-1.05	Utility Plan-PF-X.00

PLAY FIELD: TYPICAL INFORMATION

PF-1.06	Construction Details-PF-X.00
PF-1.07	Construction Details-PF-X.00

BLEACHERS: SITE DEVELOPMENT

B1	COVER PAGE
B2	GENERAL NOTES

BLEACHERS: HOME

B3	FOOTING LAYOUT
B4	EXIT FOOTING LAYOUTS
B5	PIER DETAILS
B6	PIER DETAILS
B7	UNDERSTRUCTURE LAYOUT
B8	EXIT UNDERSTRUCTURE LAYOUTS
B9	ELEVATION VIEW
B10	SECTION VIEW
B11	SECTION VIEW
B12	SECTION VIEW
B13	SECTION VIEW
B14	SIGHT LINES
B15	SIGHT LINES
B16	SEATING LAYOUT
B17	EXIT LAYOUTS
B18	LEFT EXIT VIEWS
B19	LEFT EXIT VIEWS
B20	SEAT BRACKET LAYOUT
B21	PRESS BOX LAYOUT
B22	PRESS BOX FRAMING PLAN
B23	PRESS BOX ROOF HATCH DETAILS
B24	PRESS BOX DETAILS
B24.1	PRESS BOX DETAILS
B25	PRESS BOX DETAILS
B26	PRESS BOX CEILING DETAILS
B27	APPENDIX "A" MATERIAL SPECS

BLEACHERS: VISITOR

B28	FOOTING LAYOUT
B29	PIER DETAILS
B30	PIER DETAILS
B31	UNDERSTRUCTURE LAYOUT
B32	ELEVATION VIEWS
B33	SECTION VIEW
B34	SIGHT LINES
B35	SEATING LAYOUT
B36	EXITS
B37	SEAT BRAKET LAYOUT

BLEACHERS: DETAILS

B38	PLANK DETAILS
B39	PLANK DETAILS
B40	EXIT DETAILS
B41	EXIT DETAILS
B42	GRANDSTAND DETAILS
B43	GRANDSTAND DETAILS

SCOREBOARD: PC SET

1	SCOREBOARD PC COVER SHEET
2	DSA 103 SPECIAL INSPECTION FORM
3	DSA 103 SPECIAL INSPECTION FORM (CONT.)
5	MOUNTING DETAILS W/ VIDEO DISPLAY
6	DECORATIVE ACCENT TRUSS LAYOUT
9	2-COLUMN STRUCTURE W/ PIER FOUNDATIONS

Grand total: 228

GENERAL ABBREVIATIONS

REFER TO SCHEDULES AND LEGENDS FOR ADDITIONAL ABBREVIATIONS
REFER TO OTHER DISCIPLINES FOR ADDITIONAL ABBREVIATIONS

A		FHC	fire hose cabinet	POLYIS	polyisocyanurate
ABV	above	FIN	finish	O	
ACOUS	acoustical	FLR	floor	PR	pair
ACT	acoustical ceiling tile	FLUOR	fluorescent	PT	paint
AD	area drain	FT	foot or feet	PTD	painted
ADJ	adjustable	FUR	furring		
AFF	above finished floor			R	
ALT	alternate	G		R	riser
ALUM	aluminum	GAL	gallon	RAD	radius
APPROX	approximate	GALV	galvanized	RCP	reflected ceiling plan
ARCH	architect / architectural	GB	grab bar	RD	roof drain
		GC	general contractor	RE:	refer
B		GL	glass	REF	refrigerator
B.O.	bottom of	GND	ground	REINF	reinforced
BALC	balcony	GWB	gypsum wall board	REQD	required
BD	board	GYP	gypsum	RESIL	resilient
BET	between			RM	room
BLDG	building	H		RO	rough opening
BLKG	blocking	H.W.H.	hot water heater	RTU	roof top unit (mech)
BLW	below	HC	handicapped		
BM	beam	HDWD	hardwood	S	
BOT	bottom	HDWR	hardware	S	south
BRKT	bracket	HM	hollow metal	SAFB	sound attenuation fiber batt
BULKHD	bulkhead	HORIZ	horizontal		
BUR	built up roof	HR	hour	SC	scupper
		HT	height	SCHED	schedule
C				SEAL	sealant
C.G.	corner guard	I		SECT	section
CAB	cabinet	ID	inner diameter	SF	square foot
CALK	caulking	INCAN	incandescent	SHT	sheet
CDS	cabinet design series	INSUL	insulation	SIM	similar
CEM	cement	INT	interior	SPEC	specification
CER	ceramic			SQ	square
CJ	control joint	J		SS	stainless steel
CLG	ceiling	JAN	janitor	STD	standard
CLOS	closet	JST	joist	STF	storefront
CLR	clear	JT	joint	STL	steel
CO	cased opening			STOR	storage
COL	column	L		STRUCT	structural
CONC	concrete	LAM	laminate	SUSP	suspended
CONT	continous	LAV	lavatory	SYM	symmetrical
CPT	carpet	LB	pound(s)		
CT	ceramic tile	LDG	landing	T	
CTR	center	LT	light	T	tread
CW	curtain wall			T&G	tongue & groove
		M		T.O.	top of
D		MAX	maximum	TEL	telephone
DBL	double	MECH	mechanical	TER	terrazzo
DET	detail	MEMB	membrane	THK	thick
DIA	diameter	MFR	manufacturer	THR	threshold
DIM	dimension	MIN	minimum	TYP	typical
DN	down	MISC	miscellaneous		
DR	door	MO	masonry opening	U	
DS	down spout	MTD	mounted	UC	undercut
DW	dishwasher	MTL	metal	UNFIN	unfinished
DWG	drawing			UNO	unless noted otherwise
		N		UON	unless otherwise noted
E		N	north	UTIL	utility
E	east	NIC	not in contract		
EA	each	NO	number	V	
EIFS	exterior insulation & finish system	NOM	nominal	VCT	vinyl composition tile
		NTS	not to scale	VERT	vertical
ELEC	electric(al)			VIF	verify in field
ELEV	elevation	O		VTR	vent termination pipe
EMER	emergency	O.P.	overflow pipe	VWC	vinyl wall covering
ENCL	enclosure	OA	overall		
EOS	edge of slab	OC	on center	W	
EQ	equal	OD	outside diameter	W	west
EQUIP	equipment	OFF	office	W/	with
ETR	existing to remain	OH	opposite hand	W/O	without
EW	each way	OPG	opening	WC	watercloset
EXP. JT.	expansion joint	OPP	opposite	WIN	window
EXST	existing			WP	waterproof
		P		WS	wood, solid core
F		PART	partition	WSCT	wainscot
F.O.	face of	PCT	porcelain tile	WT	weight
FA	fire alarm	PERM	perimeter		
FAP	fire annunciator panel	PG	paint grade	X	
FD	floor drain	PLAM	plastic laminate	XPS	extruded polystyrene
FE	fire extinguisher	PLAS	plaster		
FEC	fire extinguisher cabinet	PLYWD	plywood		
FG	finish group				
FH	fire hydrant				

GENERAL NOTES

1. ALL WORK AND MATERIALS SHALL BE IN FULL ACCORDANCE WITH THE REQUIREMENTS OF THE CODES AND ALL APPLICABLE LOCAL ORDINANCES. WHERE CONTRACT DOCUMENTS EXCEED SUCH REQUIREMENTS, WITHOUT VIOLATING SUCH CODES, REGULATIONS AND ORDINANCES, CONTRACT DOCUMENTS TAKE PRECEDENCE. WHERE CODES CONFLICT, THE MORE STRINGENT SHALL APPLY.

2. THE CONSTRUCTION DOCUMENT DRAWINGS AND PROJECT MANUAL (SPECIFICATIONS) ARE COMPLIMENTARY, AND WHAT IS REQUIRED BY ONE SHALL BE AS BINDING AS IF REQUIRED BY BOTH.

3. THE CONTRACTOR SHALL:
   A. CONFIRM ALL NEW AND EXISTING CONDITIONS WITH THE CONTRACT DOCUMENTS. NOTIFY THE ARCHITECT IMMEDIATELY IN WRITING OF ALL DISCREPANCIES OR CONFLICTS. DO NOT PROCEED WITH WORK IN THE AREA OF DISCREPANCY OR CONFLICT UNTIL DIRECTION IS GIVEN BY THE ARCHITECT. IF THE CONTRACTOR PROCEEDS WITHOUT DIRECTION FROM THE ARCHITECT, IT SHALL BE AT THE CONTRACTOR'S RISK, AND THE CONTRACTOR SHALL BE RESPONSIBLE FOR ALL REQUIRED CORRECTIVE ACTION.
   B. REVIEW THE ARCHITECTURAL DRAWINGS BEFORE THE INSTALLATION OF SYSTEMS SHOWN ON CONSULTING ENGINEERS'S DOCUMENTS. DISCREPANCIES BETWEEN THE ARCHITECTURAL AND CONSULTING ENGINEER'S DOCUMENTS SHALL BE BROUGHT TO THE ARCHITECT'S ATTENTION FOR DIRECTION. CONSTRUCTION INSTALLED IN CONFLICT WITH THE ARCHITECTURAL DRAWINGS SHALL BE CORRECTED BY THE CONTRACTOR AT NO EXPENSE TO THE OWNER.
   C. CORRECT ALL WORK INSTALLED IN CONFLICT WITH THE CONSTRUCTION DOCUMENTS BY THE CONTRACTOR AS DIRECTED BY THE ARCHITECT AND AT NO ADDITIONAL EXPENSE TO THE OWNER.
   D. SECURE AND PAY FOR ALL PERMITS, GOVERNMENTAL FEES, AND LICENSES REQUIRED FOR PROPER COMPLETION OF THE WORK. REQUEST ALL INSPECTIONS REQUIRED BY LOCAL GOVERNMENTAL AGENCIES AND COORDINATE WORK ACCORDINGLY.
   E. PROVIDE BARRICADES AND PROTECTIVE DEVICES SEPARATING CONSTRUCTION AREAS. PROVIDE TEMPORARY PASSAGES AS REQUIRED. PRIOR TO DELIVERY OF MATERIALS TO CONSTRUCTION ZONE AND REMOVAL OF WASTE FROM SITE, CHECK WITH OWNER FOR ACCEPTABLE ACCESS ROUTE AND TIME. UNDER NO CIRCUMSTANCES USE AREA OUTSIDE THE CONSTRUCTION ZONE WITHOUT PRIOR CLEARANCE FROM THE OWNER. COMPLY WITH REQUIREMENTS AS SPECIFIED IN THE PROJECT MANUAL.
   F. REMOVE ALL TRASH AND DEBRIS DAILY. DO NOT STORE BUILDING MATERIALS IN CORRIDORS AT ANY TIME. COMPLY WITH REQUIREMENTS AS SPECIFIED IN THE PROJECT MANUAL (SPECIFICATIONS).
   G. ENACT ALL MEASURES TO PROTECT IN PLACE AND SAFEGUARD ALL ELEMENTS TO REMAIN FROM BEING DAMAGED. REPLACE OR REPAIR ELEMENTS DAMAGED BY THE EXECUTION OF THE CONTRACT TO EQUAL OR LIKE NEW CONDITION.
   H. VERIFY POINTS OF CONNECTION, INCLUDING SIZES AND LOCATIONS, AND ALL OTHER REQUIRED OPERATING CRITERIA WITH EQUIPMENT MANUFACTURER.
   I. BE RESPONSIBLE FOR REQUESTING ALL INSPECTIONS AND TESTS INDICATED ON THE PLANS AND SPECIFICATIONS, RECOMMENDED BY THE SOILS REPORT AND/OR REQUIRED BY ANY GOVERNMENT AGENCY. OWNER SHALL BEAR THE COSTS.
   J. CONFIRMING AND CORRELATING ALL QUANTITIES AND DIMENSIONS; SELECTING FABRICATION PROCESSES AND TECHNIQUES OF CONSTRUCTION; COORDINATING THAT ALL TRADES HAVE REVIEWED THE ENTIRE WORK AND DOCUMENTATION AND NOT LIMITED TO SAID SPECIFIC TRADE.

4. DO NOT SCALE THE CONSTRUCTION DOCUMENTS. WRITTEN DIMENSIONS TAKE PRECEDENCE OVER SCALED GRAPHICS. NOTIFY THE ARCHITECT IMMEDIATELY IN WRITING OF ALL ADDITIONAL REQUIRED DIMENSIONS. DO NOT PROCEED WITH WORK IN THE AREA OF DISCREPANCY OR CONFLICT UNTIL DIRECTION IS GIVEN BY THE ARCHITECT. IF THE CONTRACTOR PROCEEDS WITHOUT DIRECTION FROM THE ARCHITECT, IT SHALL BE AT THE CONTRACTOR'S RISK, AND THE CONTRACTOR SHALL BE RESPONSIBLE FOR ALL REQUIRED CORRECTIVE ACTION.

5. PRIORITY OF DOCUMENTS: FIGURED DIMENSIONS ON DRAWINGS SHALL GOVERN. BUT WORK NOT DIMENSIONED SHALL BE AS DIRECTED. WORK NOT PARTICULARLY SHOWN OR SPECIFIED SHALL BE THE SAME AS SIMILAR PARTS THAT ARE SHOWN OR SPECIFIED. LARGE SCALE DETAILS SHALL TAKE PRECEDENCE OVER SMALLER SCALE DRAWINGS AS TO SHAPE & DETAILS OF CONSTRUCTION. SPECIFICATIONS SHALL GOVERN TO MATERIALS, WORKMANSHIP AND INSTALLATION PROCEDURES. THE SPECIFICATIONS CALLING FOR FOR THE HIGHER QUALITY MATERIAL OR WORKMANSHIP SHALL PREVAIL. CONTRACTOR SHALL NOTIFY THE ARCHITECT/ENGINEER IN WRITING OF CONFLICTS IN THE WORKING DRAWINGS & SPECIFICATIONS WHICH MAY BE IN CONFLICT. IN THE EVENT THAT DRAWINGS AND SPECIFICATIONS ARE IN CONFLICT, THE MORE RESTRICTIVE, HIGHER QUALITY MATERIAL OR WORKMANSHIP SHALL PREVAIL.

6. THESE DOCUMENTS AND THE IDEAS AND DESIGNS INCORPORATED HEREIN, AS AN INSTRUMENT OF PROFESSIONAL SERVICE, ARE THE PROPERTY OF PBK ARCHITECTS, INC., AND ARE NOT TO BE USED, IN WHOLE OR IN PART, FOR ANY OTHER PROJECT WITHOUT THE WRITTEN AUTHORIZATION OF PBK ARCHITECTS, INC.

7. THE WORK SHOWN ON THESE DRAWINGS AS EXISTING CONDITIONS WAS PREPARED FROM INFORMATION FURNISHED BY THE OWNER. WHILE THIS INFORMATION IS BELIEVED TO BE RELIABLE, PBK ARCHITECTS, INC. IS NOT RESPONSIBLE FOR THE ACCURACY OR ADEQUACY OF ANY WORK SHOWN AS EXISTING NOR IS PBK ARCHITECTS, INC. RESPONSIBLE FOR ANY ERRORS OR OMISSIONS WHICH MAY HAVE BEEN INCORPORATED INTO THESE DRAWINGS AS A RESULT.

8. FIRE SAFETY DURING CONSTRUCTION & DEMOLITION:
   A. GENERAL: FIRE SAFETY DURING CONSTRUCTION SHALL COMPLY WITH CALIFORNIA FIRE CODE (CFC) CALIFORNIA CODE OF REGULATIONS (CCR) TITLE 24, PART 9, CHAPTER 5 AND CHAPTER 33. ALL CONSTRUCTION AND DEMOLITION SHALL BE IN ACCORDANCE WITH CHAPTER 33 OF THE CBC AND CFC AND THE WRITTEN SITE FIRE SAFETY PLAN
   B. ACCESS ROADS: FIRE DEPARTMENT ACCESS ROADS SHALL BE ESTABLISHED AND MAINTAINED IN ACCORDANCE WITH CHAPTERS, SECTION 501.4 AND CHAPTER 33, SECTION 3311.
   C. WATER SUPPLY: WATER MAINS AND HYDRANTS SHALL BE OPERATION IN ACCORDANCE WITH CHAPTER 5, SECTION 501.4 AND CHAPTER 33, SECTION 3313
   D. BUILDING ACCESS: ACCESS TO BUILDINGS FOR THE PURPOSE OF FIREFIGHTING SHALL BE PROVIDED. CONSTRUCTION MATERIAL SHALL NOT BLOCK ACCESS TO BUILDINGS, HYDRANTS OR FIRE APPLIANCES.
   E. ALTERATIONS OF BUILDINGS: SHALL COMPLY WITH APPLICABLE PROVISIONS OF CHAPTER 33.
   F. DEMOLITION OF BUILDINGS: SHALL COMPLY WITH APPLICABLE PROVISIONS OF CHAPTER 33.
   G. FIRE WATCH: MAINTAIN FIRE WATCH WHEN REQUIRED BY THE BUILDING OFFICIAL AND WHEN EXISTING FIRE PROTECTION SYSTEMS ARE SHUT DOWN FOR ALTERATIONS IN ACCORDANCE WITH CHAPTER 33, SECTION 3305.5. FIRE WATCH SHALL REMAIN IN EFFECT UNTIL EXISTING FIRE PROTECTION SYSTEMS ARE RETURNED TO SERVICE OR AS ALLOWED BY THE BUILDING OFFICIAL

9. DRAWINGS NOTED AS "N.T.S" OR "NTS" ARE NOT TO SCALE.

10. FIELD VERIFY ALL DIMENSIONS AND EXISTING CONDITIONS BEFORE COMMENCING WORK. NOTIFY ARCHITECT OF ANY DISCREPANCIES PRIOR TO PROCEEDING WITH AFFECTED WORK.

11. NOTES OR DIMENSIONS NOTED AS "TYPICAL" OR "TYP." SHALL APPLY TO CONDITIONS THAT ARE THE SAME OR SIMILAR.

12. DIMENSIONS NOTED AS "FIELD VERIFY" OR "FV" SHALL BE MEASURED AND CONFIRMED AT THE PROJECT SITE BY THE CONTRACTOR AND REVIEWED WITH THE ARCH. BEFORE INCORPORATING INTO THE WORK.

13. DIMENSIONS NOTED AS "CLEAR" OR "CLEAR INSIDE" OR "CLR" REQUIRE SPECIFIC COORDINATION AMONG DISCIPLINES AND OR MANUFACTURERS.

14. NONRESIDENTIAL ENERGY STANDARDS COMPLIANCE STATEMENT (TITLE 24, PART 6):

    THE DESIGN INDICATED HEREIN COMPLIES WITH THE REQUIREMENTS OF THE ENERGY CONSERVATION STANDARDS OF TITLE 24, PART 6, CALIFORNIA CODE OF REGULATIONS. THE PROPOSED BUILDING(S) WILL BE IN COMPLIANCE WITH THE ENERGY CONSERVATION STANDARDS PROVIDED IT (THEY) IS (ARE) BUILT ACCORDING TO THESE DRAWINGS AND SPECIFICATIONS AND PROVIDED ANY FUTURE IMPROVEMENTS ARE COMPLETED ACCORDING TO THE REQUIREMENTS OF TITLE 24, PART 6, CALIFORNIA CODE OF REGULATIONS. THESE PLANS AND SPECIFICATIONS HAVE BEEN PREPARED TO INCLUDE ALL SIGNIFICANT ENERGY CONSERVATION FEATURES REQUIRED FOR COMPLIANCE WITH THE STANDARDS. BUILDING AREAS THAT ARE UNCONDITIONED AND/OR NOT SUBJECT TO THE STANDARDS ARE INDICATED ON THE PLANS.

    ENVELOPE MANDATORY MEASURES:

    A. INSTALLED INSULATING MATERIALS SHALL HAVE BEEN CERTIFIED BY THE MANUFACTURER TO COMPLY WITH THE CALIFORNIA QUALITY STANDARDS FOR INSULATING MATERIAL.
    B. ALL INSULATING MATERIALS SHALL BE INSTALLED IN COMPLIANCE WITH THE FLAME SPREAD RATING AND SMOKE DENSITY REQUIREMENTS OF TITLE 24, PART 2, CALIFORNIA CODE OF REGULATIONS, SECTIONS 720 AND 2603.
    C. ALL EXTERIOR JOINTS AND OPENINGS IN THE BUILDING ENVELOPE THAT ARE POTENTIAL AND OBSERVABLE SOURCES OF AIR LEAKAGE SHALL BE CAULKED, GASKETED, WEATHERSTRIPPED OR OTHERWISE SEALED.
    D. SITE CONSTRUCTED DOORS, WINDOWS, AND SKYLIGHTS SHALL BE CAULKED BETWEEN THE UNIT AND THE BUILDING, AND SHALL BE WEATHERSTRIPPED (EXCEPT FOR UNFRAMED GLASS DOORS AND FIRE DOORS).
    E. MANUFACTURED DOORS AND WINDOWS INSTALLED SHALL HAVE AIR INFILTRATION RATES CERTIFIED BY THE MANUFACTURER IN ACCORDANCE WITH TITLE 24, PART 6, CALIFORNIA CODE OF REGULATIONS, SECTION 110.6.
    F. MANUFACTURED FENESTRATION PRODUCTS IN THE ENVELOPE OF THE BUILDING, INCLUDING, BUT NOT LIMITED TO, WINDOWS, SLIDING GLASS DOORS, FRENCH DOORS, SKYLIGHTS, CURTAIN WALLS, AND GARDEN WINDOWS MUST BE LABELED FOR U-VALUE IN ACCORDANCE WITH THE (NFRC) NATIONAL FENESTRATION RATING COUNCIL'S INTERIM U-VALUE RATING PROCEDURE.
    G. DEMISING WALL INSULATION SHALL BE INSTALLED IN ALL OPAQUE PORTIONS OF FRAMED WALLS (EXCEPT DOORS).

15. INSPECTOR OF RECORD REQUIREMENTS:

    A. ONE OR MORE INSPECTORS EMPLOYED BY THE OWNER IN ACCORDANCE WITH THE REQUIREMENTS OF TITLE 24 OF THE CALIFORNIA CODE OF REGULATIONS WILL BE ASSIGNED TO THE WORK. THE INSPECTORS DUTIES ARE SPECIFICALLY DEFINED IN SECTION 4-342 OF SAID TITLE 24. PART 1 AND IN ADDITION SHALL BE AS STIPULATED IN INTERPRETATION OF REGULATION DOCUMENT IR A-8.

    B. INSPECTOR SHALL BE CERTIFIED AS A CLASS __2__ INSPECTOR THROUGH THE DIVISION OF THE STATE ARCHITECT INSPECTOR EXAMINATION PROGRAM. INSPECTOR SHALL ALSO BE SPECIFICALLY APPROVED BY THE DIVISION OF THE STATE ARCHITECT FOR THIS PROJECT AT LEAST 10 DAYS PRIOR TO THE START OF ANY WORK FOR THIS PROJECT.

16. CHANGES TO THE APPROVED DRAWINGS AND SPECIFICATIONS SHALL BE MADE BY AN ADDENDUM OR A CONSTRUCTION CHANGE DOCUMENT APPROVED BY THE DIVISION OF THE STATE ARCHITECT, AS REQUIRED BY TITLE 24, CCR, PART 1, SECTION 4-338.

17. FOOD HANDLING FACILITIES SHALL COMPLY WITH ALL LOCAL HEALTH REQUIREMENTS AND THE CALIFORNIA RETAIL FOOD FACILITIES LAW.

18. THE INTENT OF THESE DRAWINGS AND SPECIFICATIONS IS THAT THE WORK OF THE ALTERATION, REHABILITATION OR RECONSTRUCTION IS TO BE IN ACCORDANCE WITH TITLE 24, CCR. SHOULD ANY CONDITIONS SUCH AS DETERIORATION OR NON-COMPLYING CONSTRUCTION BE DISCOVERED WHICH IS NOT COVERED BY THE CONTRACT DOCUMENTS WHEREIN THE FINISHED WORK WILL NOT COMPLY WITH TITLE 24, CCR, A CONSTRUCTION CHANGE DOCUMENT (CCD), OR A SEPARATE SET OF PLANS AND SPECIFICATIONS, DETAILING

CODE ANALYSIS SITE PLAN
CA1.1
FOR BLUEBEAM LABELING/OCR:

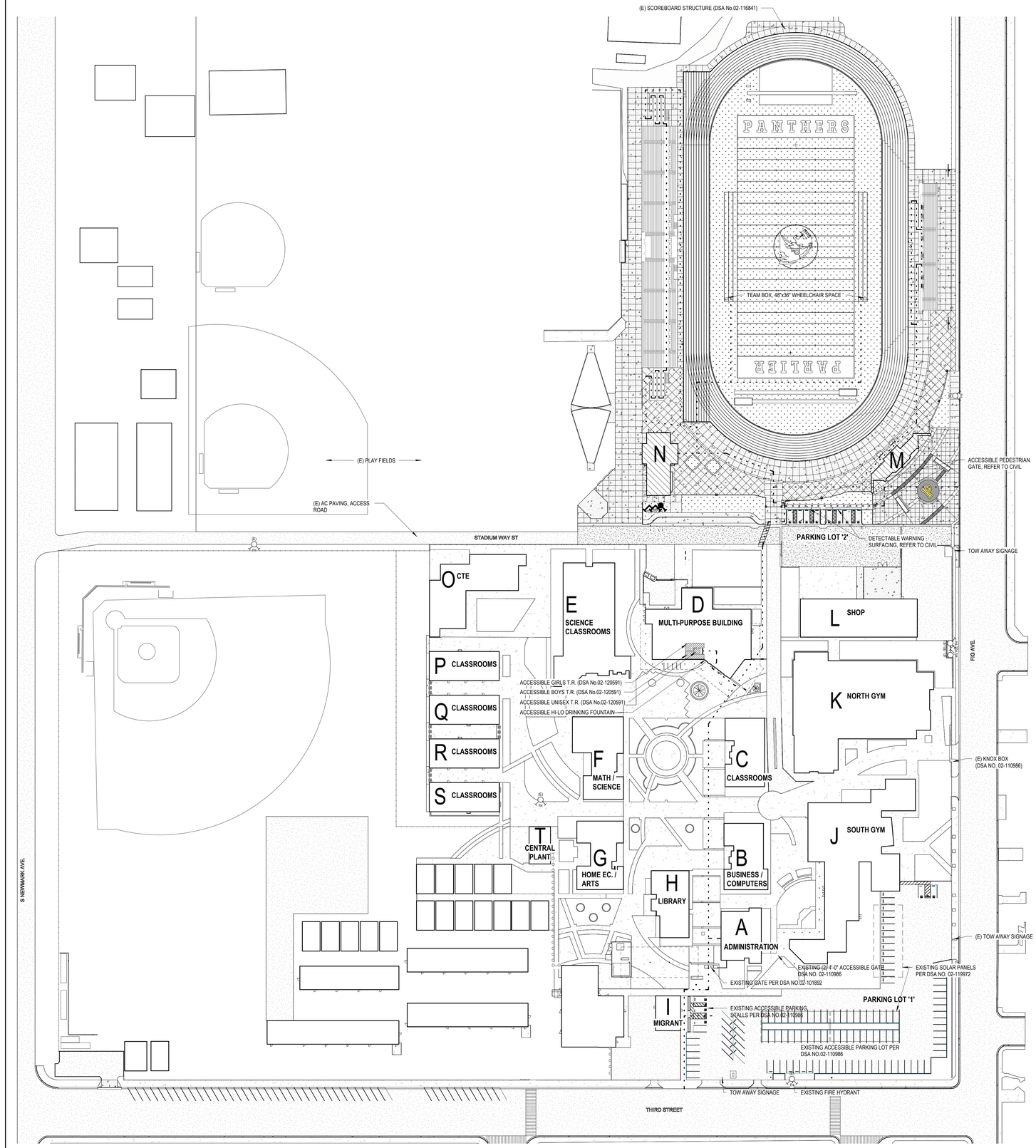

A18 CODE ANALYSIS SITE PLAN
1" = 60'-0"

PATH OF TRAVEL NOTES

ACCESSIBLE PATH OF TRAVEL (P.O.T.)
THE ACCESSIBLE PATH OF TRAVEL AS INDICATED ON PLAN IS A BARRIER-FREE ACCESS ROUTE WITHOUT ANY ABRUPT LEVEL CHANGES EXCEEDING 1/2" BEVELED AT 1:2 MAXIMUM SLOPE OR VERTICAL LEVEL CHANGES NOT EXCEEDING 1/4" MAXIMUM AND AT LEAST 48" IN WIDTH.

SURFACE IS STABLE, FIRM AND SLIP RESISTANT, CROSS SLOPE DOES NOT EXCEED 2% AND SLOPE IN THE DIRECTION OF TRAVEL IS LESS THAN 5% UNLESS OTHERWISE INDICATED.

ACCESSIBLE PATH OF TRAVEL SHALL BE MAINTAINED FREE OF OVERHANGING OBSTRUCTIONS TO 80" MINIMUM AND PROTRUDING OBJECTS GREATER THAN 4" PROJECTION FROM WALL ABOVE 27" AND LESS THAN 80".

DESIGN PROFESSIONAL IN GENERAL RESPONSIBLE CHARGE STATEMENT:
THE P.O.T. INDENTIFIED IN THESE CONSTRUCTION DOCUMENTS MEETS THE REQUIREMENTS OF THE CURRENT APPLICABLE CALIFORNIA BUILDING CODE (CBC) ACCESSIBILITY PROVISIONS FOR **PATH OF TRAVEL REQUIREMENTS FOR ALTERATIONS, ADDITIONS AND STRUCTURAL REPAIRS**. AS PART OF THE DESIGN OF THIS PROJECT, THE P.O.T. WAS EXAMINED AND ANY ELEMENTS, COMPONENTS OR PORTIONS OF THE POT THAT WERE DETERMINED TO BE NONCOMPLIANT HAVE BEEN IDENTIFIED AND THE CORRECTIVE WORK NECESSARY TO BRING THEM INTO COMPLIANCE HAS BEEN INCLUDED WITHIN THE SCOPE OF THIS PROJECT'S WORK THROUGH DETAILS, DRAWINGS AND SPECIFICATIONS INCORPORATED INTO THESE CONSTRUCTION DOCUMENTS. ANY NONCOMPLIANT ELEMENTS, COMPONENTS OR PORTIONS OF THE P.O.T. THAT WILL NOT BE CORRECTED BY THIS PROJECT BASED ON VALUATION THRESHOLD LIMITATIONS OR A FINDING OF UNREASONABLE HARDSHIP ARE INDICATED IN THESE CONSTRUCTION DOCUMENTS.

DURING CONSTRUCTION, IF P.O.T. ITEMS WITHIN THE SCOPE OF THE PROJECT REPRESENTED AS CBC COMPLIANT ARE FOUND TO BE NONCONFORMING BEYOND REASONABLE CONSTRUCTION TOLERANCES, THE ITEMS SHALL BE BROUGHT INTO COMPLIANT WITH THE CBC AS A PART OF THIS PROJECT BY MEANS OF A CONSTRUCTION CHANGE DOCUMENT.

SITE ANALYSIS LEGEND

PROPERTY LINE
ASSUMED PROPERTY LINE
ACCESSIBLE PATH OF TRAVEL
SAFE DISPERSAL PATH
(E) BUILDING NOT IN SCOPE
OVERHANG
PROPOSED BUILDING
(E) / PROPOSED FIRE HYDRANT
FIRE ALARM CONTROL ROOM / FIRE SPRINKLER RISER LOCATION
(E) / PROPOSED FIRE DEPARTMENT CONNECTION
ACCESSIBLE TOILET ROOM
(E) / PROPOSED POST INDICATOR VALVE
PROPOSED BUILDING I.D. SIGN
VAN ACCESSIBLE STALL / VAN ACCESSIBLE STALL WITH EVCS
EV CHARGING STATION (EVCS WITH EVCE)
ACCESSIBLE STALL / ACCESSIBLE STALL WITH EVCS
EV CAPABLE PARKING STALL

NOTE:
REFER TO CIVIL DRAWINGS FOR PAVEMENT MARKING AND EQUIPMENT DETAILS.

PARKING CALCULATIONS

MINIMUM REQUIRED FIRE FLOW AND FLOW DURATION (2022 CFC TABLE BB105.1)

OCCUPANCY 1-500 = 2
OCCUPANCY 501-1,000 = 3
OCCUPANCY > 1,000 = 4

MIN. EGRESS WIDTHS (PER CBC 2019, 1005.3.2)

DOOR WIDTH = 0.2" / OCCUPANT

THE REQUIRED CAPACITY OF EACH DOOR OPENING SHALL BE SUFFICIENT FOR THE OCCUPANT LOAD THEREOF AND SHALL PROVIDE A MINIMUM CLEAR WIDTH OF 32 INCHES.

CAMPUS BUILDING INDEX

BLDG ID	DESCRIPTION	STORIES	BUILDING AREA	OCCUPANCY	CONSTRUCTION TYPE	FIRE SPRINKLERS	DSA #
A	ADMINISTRATION	1	3,850	B	V-B	No	25688, 25690, 02-101892
B	CLASSROOMS	1	4,813	E	V-B	No	25688, 25690, 02-101693
C	CLASSROOMS	1	4,851	E	V-B	No	25688, 25690, 02-101693
D	MULTI-PURPOSE BUILDING	1	16,669	A-2, A-3, B	V-B	Yes	02-120591
E	CLASSROOMS	1	12,009	E	V-B	No	02-101892
F	CLASSROOMS	1	6,162	E	V-B	No	25688, 25690, 02-101693
G	CLASSROOMS	1	5,051	E	V-B	No	25688, 25690, 02-101693
H	LIBRARY	1	4,356	A-3	V-B	No	25688, 25690, 02-101693
I	CLASSROOMS	1	1,472	E	V-B	No	15530, 25688, 25690, 02-101693
J	S. GYMNASIUM	1	20,295	A-4	III-B, V-B	No	5116, 25688, 25690, 26922, 02-101693
K	N. GYMNASIUM	1	15,180	A-4	II-B	Yes	02-110986
L	CLASSROOMS	1	8,108	E	V-B	No	25688, 25690
O	CTE	1	10,580	E	V-B	No	02-119508
P	MODULAR CLASSROOMS	1	4,640	E	V-B	No	02-120570
Q	MODULAR CLASSROOMS	1	4,640	E	V-B	No	02-120570
R	MODULAR CLASSROOMS	1	4,640	E	V-B	No	02-120570
S	MODULAR CLASSROOMS	1	4,640	E	V-B	No	02-120570
T	UTILITY YARD	1	N/A	N/A	N/A	No	02-101892

CODE ANALYSIS - BLDG "M"

1. GOVERNING CODE: 2025 CALIFORNIA BUILDING CODE (CBC)
2. OCCUPANCY GROUPS: (CBC 302) A-5, S-1, B
3. CONSTRUCTION TYPE: (CBC 602 & TABLE 601, 903.2.20) TYPE V-B NON-FIRE SPRINKLERED
4. BASIC ALLOWABLE HEIGHT & BUILDING AREA: (CBC TABLES 504.3, 504.4, 506.2) (CBC 602 & TABLE 601)

OCCUPANCY GROUP	ALLOW. HEIGHT NS	ALLOW. STORIES NS	ALLOW. AREA AREA (NS)
GROUP A-5	40'-0"	UL	UL
GROUP S-1	40'-0"	1	9,000 SF
GROUP B	40'-0"	2	9,000 SF

5. PROPOSED BUILDING DATA:

OCCUPANCY GROUP	ACTUAL BLDG HEIGHT	ACTUAL # OF STORIES	ACTUAL BLDG AREA
GROUP A-5	15'-0"	1	1,219 SF
GROUP B	15'-0"	1	252 SF
GROUP S-1	15'-0"	1	49 SF
TOTAL AREA:			**1,920 SF**

6. NONSEPARATED SPACES: (CBC 508.3) MOST RESTRICTIVE: GROUP S-1, 1,920 SF < 9,000 SF
7. FIRE RESISTANCE RATING REQUIREMENTS: (CBC TABLE 601)

STRUCTURAL FRAME:	0 HOURS
BEARING WALLS - EXTERIOR:	0 HOURS
BEARING WALLS - INTERIOR:	0 HOURS
NON-BEARING WALLS & PARTITIONS - EXTERIOR (CBC TABLE 705.5)	FIRE RATING BASED ON FIRE SEPARATION DISTANCE: X<5' 1 HOUR; 5'≤X<10' 1 HOUR; 10'≤X<30' 0 HOURS; X≥30' 0 HOURS
ACTUAL SEPARATION DIST:	**>20'-0" 0 HOURS**
NON-BEARING WALLS & PARTITIONS - INTERIOR:	0 HOURS
FLOOR CONSTRUCTION:	0 HOURS
ROOF CONSTRUCTION:	0 HOURS
SHAFT ENCLOSURES: (CBC 713)	0 HOURS
PROJECTIONS: (CBC 705.2)	0 HOURS (ANY APPROVED MATERIALS)
EXTERIOR OPENINGS: (CBC TABLE 705.8)	(X≥30') UNPROTECTED, NONSPRINKLERED NO LIMIT
CORRIDORS: (CBC TABLE 1020.1)	0 HOURS

8. OCCUPANT LOAD: (CBC TABLE 1004.5) SHOWN ON PLAN
9. TOTAL EGRESS WIDTH REQUIRED: (CBC 1005.1) SHOWN ON PLAN
10. COMMON PATH OF EGRESS TRAVEL: (CBC TABLE 1006.2.1) TWO EXITS OR EXIT ACCESS DORWAYS FROM A SPACE SHALL BE PROVIDED WHERE THE COMMON PATH OF TRAVEL EXCEEDS 75 FEET.

CODE ANALYSIS - BLDG "N"

1. GOVERNING CODE: 2025 CALIFORNIA BUILDING CODE (CBC)
2. OCCUPANCY GROUPS: (CBC 302) A-5, E, B, S-2
3. CONSTRUCTION TYPE: (CBC 602 & TABLE 601, 903.2.20) TYPE V-B NON-FIRE SPRINKLERED
4. BASIC ALLOWABLE HEIGHT & BUILDING AREA: (CBC TABLES 504.3, 504.4, 506.2) (CBC 602 & TABLE 601)

OCCUPANCY GROUP	ALLOW. HEIGHT S (w/o Area Inc)	ALLOW. STORIES S (w/o Area Inc)	ALLOW AREA S1
GROUP A-5	40'-0"	UL	UL
GROUP E	40'-0"	1	9,900 SF
GROUP B	40'-0"	2	9,000 SF
GROUP S-1	40'-0"	1	9,000 SF
GROUP S-2	40'-0"	2	13,500 SF

5. PROPOSED BUILDING DATA:

OCCUPANCY GROUP	ACTUAL BLDG HEIGHT	ACTUAL # OF STORIES	ACTUAL BLDG AREA
GROUP A-5	14'-7"	1	1,366 SF
GROUP E	14'-7"	1	907 SF
GROUP B	14'-7"	1	494 SF
GROUP S-1	14'-7"	1	354 SF
GROUP S-2	14'-7"	1	145 SF
TOTAL AREA:			**3,266 SF**

6. NONSEPARATED SPACES: (CBC 508.3) MOST RESTRICTIVE: GROUP S-1, 3,266 SF < 9,000 SF
7. FIRE RESISTANCE RATING REQUIREMENTS: (CBC TABLE 601)

STRUCTURAL FRAME:	0 HOURS
BEARING WALLS - EXTERIOR:	0 HOURS
BEARING WALLS - INTERIOR:	0 HOURS
NON-BEARING WALLS & PARTITIONS - EXTERIOR (CBC TABLE 705.5)	FIRE RATING BASED ON FIRE SEPARATION DISTANCE: X<5' 1 HOUR; 5'≤X<10' 1 HOUR; 10'≤X<30' 0 HOURS; X≥30' 0 HOURS
ACTUAL SEPARATION DIST:	**>20'-0" 0 HOURS**
NON-BEARING WALLS & PARTITIONS - INTERIOR:	0 HOURS
FLOOR CONSTRUCTION:	0 HOURS
ROOF CONSTRUCTION:	0 HOURS
SHAFT ENCLOSURES: (CBC 713)	0 HOURS
PROJECTIONS: (CBC 705.2)	0 HOURS (ANY APPROVED MATERIALS)
EXTERIOR OPENINGS: (CBC TABLE 705.8)	(X≥30') UNPROTECTED, NONSPRINKLERED NO LIMIT
CORRIDORS: (CBC TABLE 1020.1)	0 HOURS

8. OCCUPANT LOAD: (CBC TABLE 1004.5) SHOWN ON PLAN
9. TOTAL EGRESS WIDTH REQUIRED: (CBC 1005.1) SHOWN ON PLAN
10. COMMON PATH OF EGRESS TRAVEL: (CBC TABLE 1006.2.1) TWO EXITS OR EXIT ACCESS DORWAYS FROM A SPACE SHALL BE PROVIDED WHERE THE COMMON PATH OF TRAVEL EXCEEDS 75 FEET.

PBK
www.pbk.com
559-448-8400
FRESNO, CA

PARLIER HS STADIUM REPLACEMENT

CLIENT PROJECT NO: 250093
DSA SUBMISSION
DSA APPL. NO. : 02-124002 DSA FILE NO. : 10-H12

603 3rd Street
Parlier, CA 93648

PARLIER UNIFIED SCHOOL DISTRICT

TRUE

LICENSED ARCHITECT
MICHELE GARGANO
No. C-32500
RENEWAL DATE
MAR 31, 2027
STATE OF CALIFORNIA

CLIENT
PARLIER UNIFIED SCHOOL DISTRICT

DATE	PROJECT NUMBER
2026/02/09	250093

DRAWING HISTORY

No.	Description	Date
5	DSA Comments_DWG V2	2026-06-25

CHECKED BY: Checker
DRAWN BY: Author

CODE ANALYSIS SITE PLAN

CA1.1

Plot Stamp:
6/23/2026 9:33:02 AM

FIRE ACCESS SITE PLAN
CA1.2
FOR BLUEBEAM LABELING/OCR:

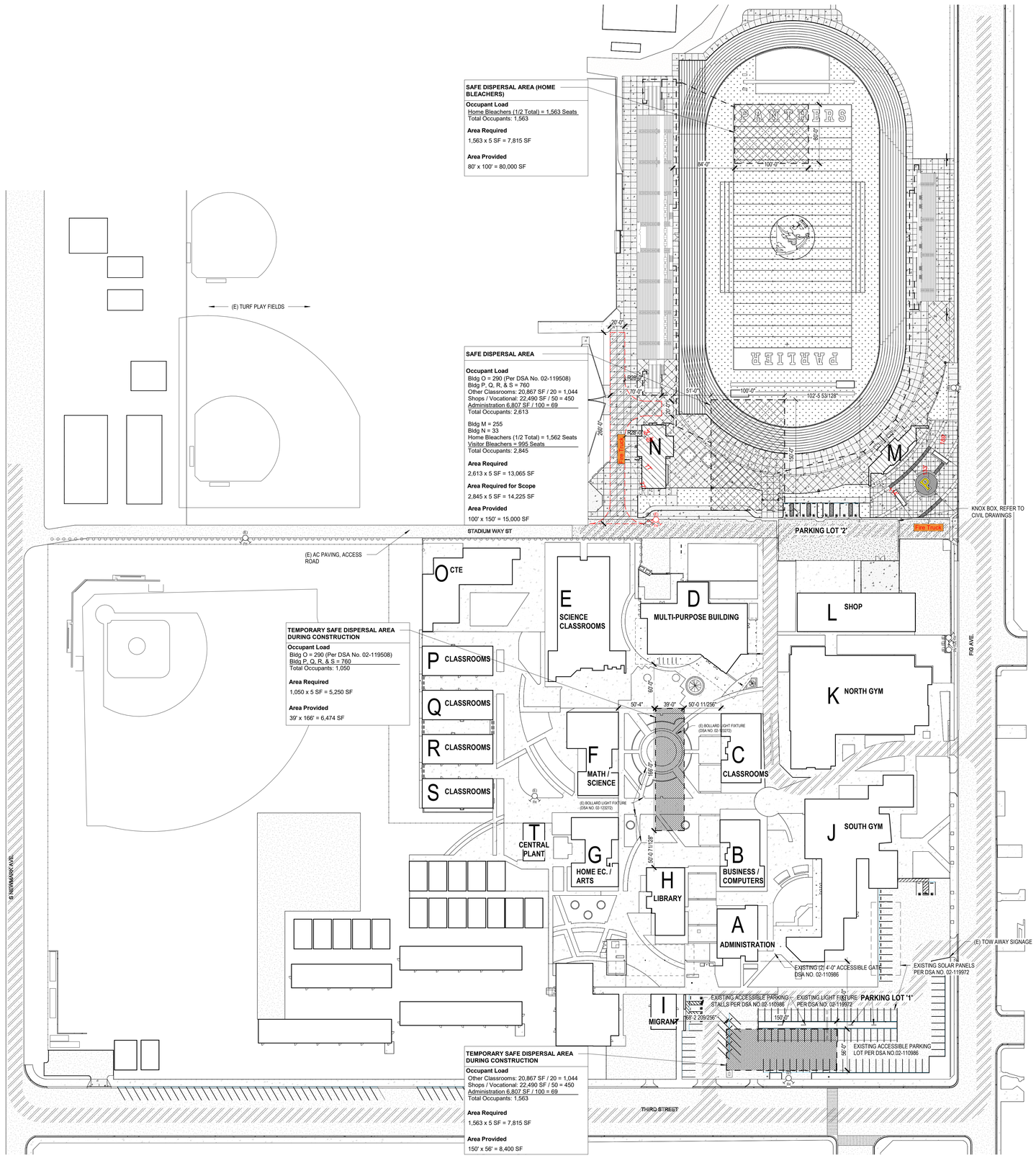

A18 FIRE ACCESS SITE PLAN
1" = 60'-0"

FIRE ANALYSIS LEGEND

- PROPERTY LINE
- ASSUMED PROPERTY LINE
- ACCESSIBLE PATH OF TRAVEL
- (E) ACCESSIBLE PATH OF TRAVEL
- (E) / PROPOSED FIRE LANE
- (E) / PROPOSED FIRE HYDRANT
- FIRE ALARM CONTROL ROOM / FIRE SPRINKLER RISER LOCATION
- (E) / PROPOSED FIRE DEPARTMENT CONNECTION
- SAFE DISPERSAL AREA
- (E) / PROPOSED POST INDICATOR VALVE
- TEMPORARY SAFE DISPERSAL AREA
- PROPOSED BUILDING I.D. SIGN
- VAN ACCESSIBLE STALL / VAN ACCESSIBLE STALL WITH EVCS
- ACCESSIBLE STALL / ACCESSIBLE STALL WITH EVCS

NOTE:
REFER TO CIVIL DRAWINGS FOR PAVEMENT MARKING AND EQUIPMENT DETAILS.

SITE PLAN LEGEND

- PROPOSED BUILDING
- (E) BUILDING NOT IN SCOPE
- **LANDSCAPE:** REFER TO LANDSCAPE DRAWINGS, TYP.
- (E) TURF
- **CAST-IN-PLACE CONCRETE:** STANDARD DUTY, REFER TO CIVIL DRAWINGS, TYP.
- (E) CONCRETE PAVING, TYP.
- **CAST-IN-PLACE CONCRETE:** HEAVY DUTY, REFER TO CIVIL DRAWINGS, TYP.
- (E) ASPHALT CONCRETE PAVING, TYP.
- **CAST-IN-PLACE CONCRETE:** STANDARD DUTY, ACCENT COLOR, REFER TO CIVIL DRAWINGS, TYP.
- **CONCRETE ASPHALT PAVING:** HEAVY DUTY, REFER TO CIVIL DRAWINGS, TYP.

FIRE FLOW CALCULATIONS

MINIMUM REQUIRED FIRE FLOW AND FLOW DURATION (2022 CFC TABLE BB105.1)

BUILDING N		BUILDING M	
TYPE V-B (0 - 3,600)	=1,5000 GPM	TYPE V-B (0 - 3,600)	=1,5000 GPM
FLOW DURATION	=2 HR	FLOW DURATION	=2 HR

NUMBER AND DISTRIBUTION OF FIRE HYDRANTS (2022 CFC TABLE CC105.1)

1,500 GPM	=1 HYDRANT REQUIRED
AVERAGE SPACING BETWEEN HYDRANTS	=500'-0"
MAX DISTANCE	=250'-0"

NOTE:
TESTED FIRE HYDRANT SHOWN RED ON SITE PLAN

DSA 810

FIRE & LIFE SAFETY SITE CONDITIONS SUBMITTAL

Division of the State Architect (DSA) documents referenced within this publication are available on the DSA Forms or DSA Publications webpages.

To facilitate the Division of the State Architect's (DSA) fire and life safety plan review of project site conditions, DSA requires the design professional to provide the following information at time of project submittal for projects consisting of construction of a new campus, construction of new building(s), additions to existing buildings, and for site alternate design means for fire department emergency vehicle access, and fire suppression water supply.

Information associated with compliance items 1 through 3 below is to be provided for all project types indicated above. Information associated with items 4 through 7 is to be completed when an alternate means is utilized. Acknowledgement by the school district and signature from the Local Fire Authority (LFA) is only required when an alternate design means is being requested.

The Project Information and Fire & Life Safety Information sections are to be completed for all projects and imaged onto the fire access site plan. When an alternate design/means is proposed, all sections on pages 1 and 2 are to be completed and imaged on the fire access site plan.

For additional information refer to the instructions at the end of this form and DSA Policy *PL 09-01: Fire Flow for Buildings*.

PROJECT INFORMATION	
School District/Owner:	Parlier Unified School District
Project Name/School:	Parlier High School Stadium Replacement
Project Address:	603 3rd Street, Parlier CA 93648

FIRE & LIFE SAFETY INFORMATION				
1.	Has a fire hydrant flow test been performed within the past 12 months? *(If yes, provide a copy of the test data.)*	Yes ☑		No ☐
2.	Was the fire hydrant water flow test performed as part of this LFA review?	Yes ☑		No ☐
3.	Is the project located within a designated fire hazard severity zone (FHSZ) as established by Cal-Fire? *(If yes, indicate FHSZ classification below.)*	Yes ☐		No ☑
	Refer to the following website for FHSZ locations: Fire Hazard Severity Zones in State Responsibility Area	Moderate ☐	High ☐	Very High ☐
	Wildland Interface Area (WIFA) *(If any designations are checked, project design must meet the requirements of CBC Chapter 7A.)*			WIFA ☐

DSA 810
FIRE & LIFE SAFETY SITE CONDITIONS SUBMITTAL

CONDITION MEANS AND METHODS RESOLUTION		ALTERNATE ACCEPTED			
		Yes	No	N/A	N/R
4.	Emergency vehicle access roadways do not meet CFC requirements.			✓	
4a.	**Acceptable Alternate:** Emergency vehicle and personnel access as proposed by the project architect is acceptable for providing fire suppression and protection of life and property.				
5.	**Fire Hydrants:** Number and spacing does not meet CFC requirements.			✓	
5a.	**Acceptable Alternate:** Number of fire hydrants and spacing as proposed by the project architect is acceptable for fire suppression and protection of life and property.				
6.	**Fire Hydrants:** Water flow and pressure are less than CFC minimum.			✓	
6a.	**Acceptable Alternate:** The available flow and pressure is acceptable for providing fire suppression and protection of life and property.				
7.	Location of fire department connection(s) serving fire sprinkler systems or standpipe systems does not meet CFC requirements.			✓	
7a.	**Acceptable Alternate:** The location of fire department connection serving the fire sprinkler system and/or standpipe system is acceptable for providing fire suppression and protection of life and property.				

School District Acceptance of Acceptable Design Alternates
By signing this form, the school district acknowledges and accepts the proposed design as an alternative to California Building Code (CBC) and California Fire Code (CFC) minimum requirements, as indicated by one or more of the conditions indicated at items 4a, 5a, 6a or 7a, for providing fire and life safety protection of life and property.

Accepted by: _____ Title: _____

Signature: _____ Date: _____

LOCAL FIRE AUTHORITY (LFA) INFORMATION	
LFA Agency Name:	
LFA Review Official:	
Title:	Work Phone:
Work Email:	

LFA Reviewer's Signature: _____ Date: _____

FRESNO COUNTY FIRE
PROTECTION DISTRICT
1700 Jensen Av. Suite # 103
Sanger, California 93657
Telephone: (559) 493-4339
Fax: (559) 875-7451
www.fresnocountyfire.org

WATER FLOW REQUEST

This form is to be used by fire sprinkler contractors to request the water flow for the project location specified. Complete Section 1 and send to Fresno County Fire Protection District. This form, with both Sections 1 and 2 completed, must be submitted to Fresno County Fire Protection District with the fire sprinkler plans.

SECTION 1

REPORT DATE: 12/22/2025	COMPANY REQUESTING FLOW INFORMATION: Parlier Unified School District		
COMPANY ADDRESS: 900 Newmark Ave		CITY: Parlier	STATE: CA
COMPANY PHONE NUMBER: 559-646-2731	FAX NUMBER: 559-888-0210		
CONTACT PERSON: Alvaro Alanis		EMAIL: (Contact Person) aalanis@parlierunified.org	
PROJECT NAME: Parlier High School Stadium Replacement		PROJECT LOCATION: 601 3rd St, Parlier	
STREET WHERE WATER SERVICE WILL BE OBTAINED FROM: On Campus (Stadium Way)			

Do not write below this line – To be completed by Fresno County Fire Protection District

SECTION 2

LOCATION OF TESTED HYDRANT: On Campus (Stadium Way)		
DATE HYDRANT FLOWED: 12/22/2025	TIME HYDRANT FLOWED: 10:00 AM	HYDRANT NUMBER or ID: N/A
STATIC: 55 PSI	RESIDUAL: 45 PSI	PITOT: 40 PSI
FLOW: 2087 GPM @ 20 PSI	COMMENTS:	
INFORMATION SENT BY: ☐ Fax ☐ Phone ☐ Mail ☑ E-Mail By: John Blalock		Date:

Revision: 3/20/25

Receipt

Fresno County Fire Protection District
Fire Prevention Bureau
1700 Jensen Ave, Ste 103
Sanger, California 93657
(559) 319-0400
www.fresnocountyfire.org

Fire Permit # 11571	Date Submitted 1/27/2026	Building Permit	APN
Jurisdiction: Parlier	Applicant: Parlier Unified School District	Contact Person: Alvaro Alanis	Phone: 559-646-2731
Applicant's Address: 900 Newmark Ave		City, State, Zip: Parlier, CA	
Project Name: Parlier High School Stadium Replacem		Building Sq. Ft.	
Project Address: 601 3rd St		City, State, Zip: Parlier, CA	
Activity: Hydrant Flow Test	Type of Project: Fire Dmt. Site & Bldg. Final		
Plan Review Fee: $0.00	Fee Paid	Date Paid	Initials / Deposit Into Account #
Fees Due: $280.00	Fee Paid: $280.00	Date Paid: 1/27/2026	Initials: JB / Deposit Into Account #
Permit Fee	Fee Paid	Date Paid	Initials / Deposit Into Acct#
Comments			

PROCESSED BY FCFPD
1/27/2026 10:19:09 AM
DSA SAC
Cash Check
CC
MO
Debit
Mastercard/Visa
American Express
Help
Cash Open
SALE AMOUNT
280.00
Paper Flow Card Attached
Payment Received
Receipt Approved (Verification)
Approved Agent
Approved Copy

PARLIER HS STADIUM REPLACEMENT
603 3rd Street
Parlier, CA 93648

CLIENT PROJECT NO: 250093
DSA SUBMISSION
DSA APPL. NO.: 02-124002 DSA FILE NO.: 10-H12

PBK
www.pbk.com
559-448-8400
FRESNO, CA

PARLIER UNIFIED SCHOOL DISTRICT

N
TRUE

LICENSED ARCHITECT
MICHELE GARGANO
No. C-32550
RENEWAL DATE
MAR 31, 2027
STATE OF CALIFORNIA

CLIENT	
PARLIER UNIFIED SCHOOL DISTRICT	
DATE: 2026/02/09	PROJECT NUMBER: 250093

DRAWING HISTORY

No.	Description	Date

CHECKED BY: Checker
DRAWN BY: Author

FIRE ACCESS SITE PLAN

CA1.2

Plot Stamp:
6/23/2026 9:35:01 AM

EXIT ANALYSIS - BUILDINGS
CA2.1
FOR BLUEBEAM LABELING/OCR:

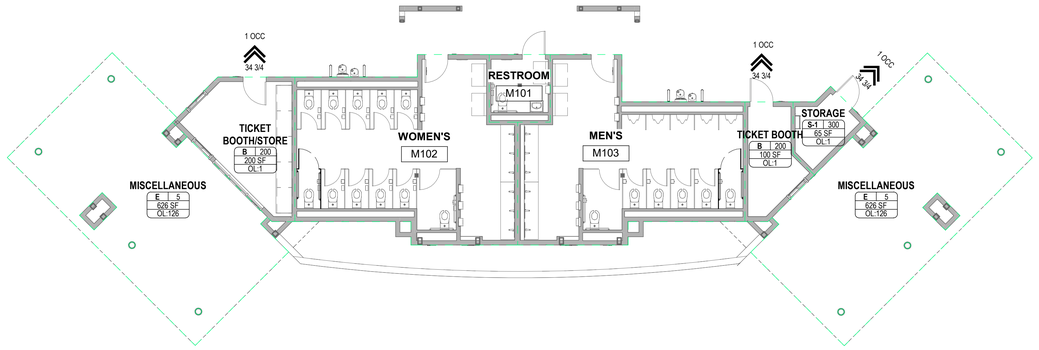

J18 EXIT ANALYSIS - BUILDING M
1/8" = 1'-0"

A18 EXIT ANALYSIS - BUILDING N
1/8" = 1'-0"

LIFE SAFETY SYMBOLS LEGEND

- 1HR FIRE-RATED WALL
- 2HR FIRE-RATED WALL
- 3HR FIRE-RATED WALL
- 0HR SMOKE RATED WALL
- 1HR SMOKE RATED WALL
- EGRESS TRAVEL PATH
- EGRESS COMMON PATH
- EXIT SIGN
- LS-1 / 150' - 0" — TRAVEL DISTANCE NAME / TRAVEL DISTANCE LENGTH
- ROOM NAME — OCCUPANCY TYPE / ROOM AREA — FUNCTION OF SPACE / AREA PER OCCUPANT / ROOM OCCUPANT LOAD (NET USES)
- 35" POINT OF ***EXIT ACCESS*** WITH CLEAR EXIT WIDTH (EXCLUDING DOOR LEAF AND FRAME STOPS)
- 35" POINT OF ***EXIT DISCHARGE*** WITH CLEAR EXIT WIDTH (EXCLUDING DOOR LEAF AND FRAME STOPS)
- A.E.D. — AUTOMATED EXTERNAL DEFIBRILLATOR
- F.E. — FIRE EXTINGUISHER
- F.E.C. F.E.C. F.E.C. — FIRE EXTINGUISHER CABINET, RECESSED / SEMI-RECESSED / SURFACE MOUNTED
- S#F — ROOM IDENTIFICATION SIGN
- ACCESSIBLE PUSH PLATE ACTUATOR

EXIT REQUIREMENTS & EGRESS WIDTHS

EXITS REQUIRED (PER CBC 2016, 1006.2.1)

OCCUPANCY 1-500 = 2
OCCUPANCY 501-1,000 = 3
OCCUPANCY > 1,000 = 4

MIN. EGRESS WIDTHS (PER CBC 2019, 1005.3.2)

DOOR WIDTH = 0.2" / OCCUPANT

THE REQUIRED CAPACITY OF EACH DOOR OPENING SHALL BE SUFFICIENT FOR THE OCCUPANT LOAD THEREOF AND SHALL PROVIDE A MINIMUM CLEAR WIDTH OF 32 INCHES.

GENERAL NOTES_EXIT ANALYSIS

1. SEE DOOR & HARDWARE SCHEDULES FOR ALL DOORS W/ PANIC HARDWARE
2. SEE FLOOR PLANS OF EACH BUILDING FOR APPROPRIATE WALL LEGEND, TYPES & ASSEMBLIES
3. SEE ELECTRICAL PLANS FOR ILLUMINATED EXIT SIGN TYPE, LOCATION AND REQUIREMENTS.
4. FOR SIGNAGE INFORMATION, REFER TO SHEET CA3.1, TYP.

PBK
www.pbk.com
559-448-8400
FRESNO, CA

PARLIER HS STADIUM REPLACEMENT

603 3rd Street
Parlier, CA 93648

CLIENT PROJECT NO: 250093

DSA SUBMISSION
DSA APPL. NO. : 02-124002 DSA FILE NO. : 10-H12

PARLIER UNIFIED SCHOOL DISTRICT

TRUE

LICENSED ARCHITECT
MICHELE GARGANO
No. C-32593
RENEWAL DATE
MAR 31, 2027
STATE OF CALIFORNIA

CLIENT
PARLIER UNIFIED SCHOOL DISTRICT

DATE	PROJECT NUMBER
2026/02/09	250093

DRAWING HISTORY

No.	Description	Date
5	DSA Comments_DWG V2	2026-06-25

CHECKED BY: Checker
DRAWN BY: Author

EXIT ANALYSIS - BUILDINGS

CA2.1

Plot Stamp:
6/23/2026 9:33:05 AM

EXIT ANALYSIS - BLEACHERS
CA2.2
FOR BLUEBEAM LABELING/OCR:

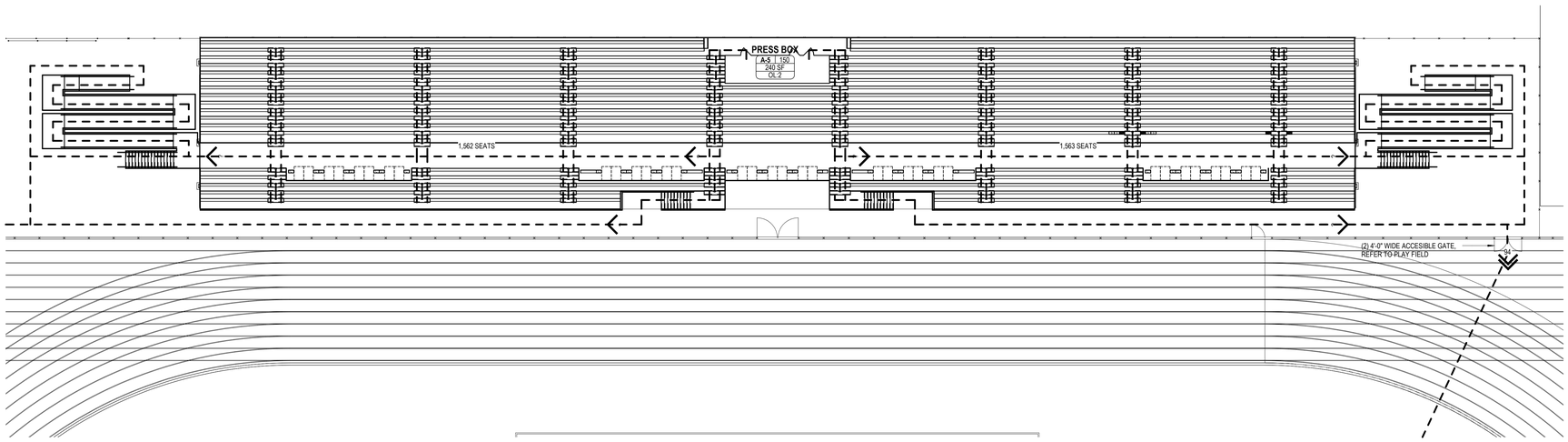

HOME BLEACHER SEATING	3123
PRESS BOX	2
TOTAL	3125

J18 EXIT ANALYSIS - HOME BLEACHER
1/16" = 1'-0"

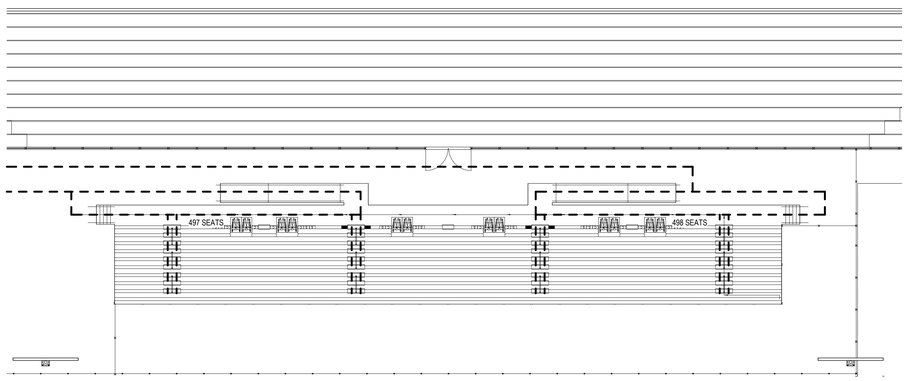

HOME BLEACHER SEATING	995
TOTAL	995

A18 EXIT ANALYSIS - VISITOR BLEACHER
1/16" = 1'-0"

LIFE SAFETY SYMBOLS LEGEND

- 1HR FIRE-RATED WALL
- 2HR FIRE-RATED WALL
- 3HR FIRE-RATED WALL
- 0HR SMOKE RATED WALL
- 1HR SMOKE RATED WALL
- EGRESS TRAVEL PATH
- EGRESS COMMON PATH
- EXIT SIGN
- LS-1 — TRAVEL DISTANCE NAME; 150' - 0" — TRAVEL DISTANCE LENGTH
- ROOM NAME; OCCUPANCY TYPE / ROOM AREA — E | 20 | 960 SF | OL: 48 — FUNCTION OF SPACE / AREA PER OCCUPANT / ROOM OCCUPANT LOAD (NET USES)
- 35" — POINT OF ***EXIT ACCESS*** WITH CLEAR EXIT WIDTH (EXCLUDING DOOR LEAF AND FRAME STOPS)
- 35" — POINT OF ***EXIT DISCHARGE*** WITH CLEAR EXIT WIDTH (EXCLUDING DOOR LEAF AND FRAME STOPS)
- A.E.D. — AUTOMATED EXTERNAL DEFIBRILLATOR
- F.E. — FIRE EXTINGUISHER
- F.E.C. F.E.C. F.E.C. — FIRE EXTINGUISHER CABINET; RECESSED / SEMI-RECESSED / SURFACE MOUNTED
- S#F — ROOM IDENTIFICATION SIGN
- ACCESSIBLE PUSH PLATE ACTUATOR

EXIT REQUIREMENTS & EGRESS WIDTHS

EXITS REQUIRED (PER 2023 ICC 300, 404.1)

OCCUPANCY 0-250	= 1
OCCUPANCY 251-750	= 2
OCCUPANCY 751-2,500	= 3
OCCUPANCY > 2,500	= 4

MIN. EGRESS WIDTHS (PER 2023 ICC 300, 404.6(3))

PASSAGEWAY, DOOR WIDTH = 0.060" / OCCUPANT

THE REQUIRED CAPACITY OF EACH DOOR OPENING SHALL BE SUFFICIENT FOR THE OCCUPANT LOAD THEREOF

GENERAL NOTES_EXIT ANALYSIS

1. SEE DOOR & HARDWARE SCHEDULES FOR ALL DOORS W/ PANIC HARDWARE
2. SEE FLOOR PLANS OF EACH BUILDING FOR APPROPRIATE WALL LEGEND, TYPES & ASSEMBLIES
3. SEE ELECTRICAL PLANS FOR ILLUMINATED EXIT SIGN TYPE, LOCATION AND REQUIREMENTS.
4. FOR SIGNAGE INFORMATION, REFER TO SHEET CA3.1, TYP.

ASSISTIVE LISTENING SYSTEM REQ.

MIN. REQUIRE RECEIVER DEVICES (PER CBC 2025, 11B-219.2)

TOTAL NUMBER OF SEATS = 4,120
4,120 x 4% = 164.8

MIN. AMOUNT OF RECEIVERS REQUIRED = 165

PBK
www.pbk.com
559-448-8400
FRESNO, CA

PARLIER HS STADIUM REPLACEMENT

603 3rd Street
Parlier, CA 93648

CLIENT PROJECT NO: 250093
DSA SUBMISSION
DSA APPL. NO.: 02-124002 DSA FILE NO.: 10-H12

PARLIER UNIFIED SCHOOL DISTRICT

N
TRUE

LICENSED ARCHITECT
MICHELE GARGANO
No. C-32550
RENEWAL DATE
MAR 31, 2027
STATE OF CALIFORNIA

CLIENT	
PARLIER UNIFIED SCHOOL DISTRICT	
DATE	PROJECT NUMBER
2026/02/09	250093

DRAWING HISTORY

No.	Description	Date

CHECKED BY: Checker
DRAWN BY: Author

EXIT ANALYSIS - BLEACHERS

CA2.2

Plot Stamp:
6/23/2026 9:35:04 AM

SIGNAGE FLOOR PLAN
CA3.1
FOR BLUEBEAM LABELING/OCR:

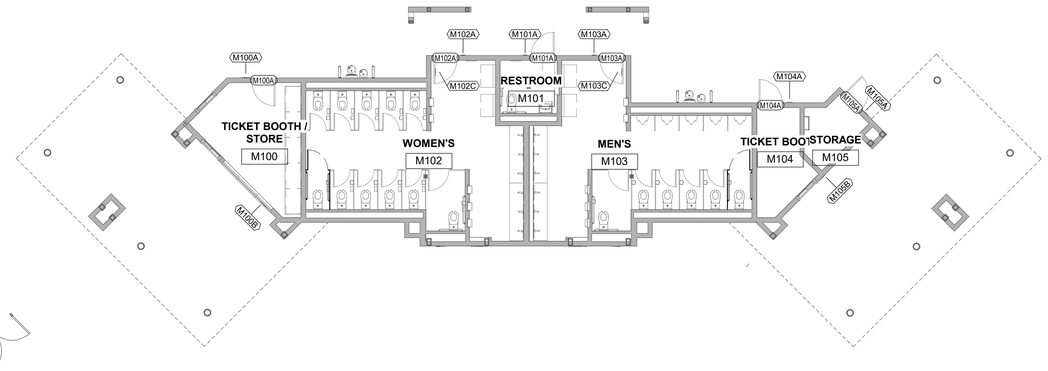

ALTERNATES: DEDUCTIVE ALTERNATE NO. 3 : TEAM ROOM AND STORAGE / LAUNDRY ROOM - refer to architectural, civil / landscape, structural, electrical, mechanical and plumbing drawings and specifications for additional information. If Deductive Alternate No. 3 is accepted, 944 SF (+/-) of building area from building 'N' (Team Room and Storage / laundry Room) is deleted from the project. Refer to new layouts without the Team room and Storage / Laundry Room in the trades referenced above.

J18 SIGNAGE PLAN - BUILDING M
1/8" = 1'-0"

SIGNAGE SCHEDULE-BUILDING M

BLDG NO	SIGN MARK	DOOR NO	SIGN TYPE	SIGN MATERIAL	SIGN LINE 1	SIGN LINE 2	MTG HEIGHT	MTG CONDITION	MTG LOCATION	REMARKS
M	M100A	M100A	E1	SP	TICKET BOOTH	-	5'-0"	1	S-1	-
M	M100B	-	L1	SP	-	-	5'-0"	4	SEE PLANS	REFER TO EXTERIOR ELEVATIONS FOR MTG HEIGHT
M	M101A	M101A	C1	SP	RESTROOM	-	4'-11"	1	S-1	-
M	M102A	M102A	C2	SP	RESTROOM	-	4'-11"	1	S-1	-
M	M102C	M102A	B1	SP	-	-	4'-11"	5	D-1	-
M	M103A	M103A	C3	SP	RESTROOM	-	4'-11"	1	S-1	-
M	M103C	M103A	B2	SP	-	-	4'-11"	5	D-1	-
M	M104A	M100A	E1	SP	TICKET BOOTH	-	5'-0"	1	S-1	-
M	M105A	M105A	E2	SP	STORAGE	-	5'-0"	1	S-1	-
M	M105B	-	L1	SP	-	-	5'-0"	1	SEE PLANS	REFER TO EXTERIOR ELEVATIONS FOR MTG HEIGHT

SIGNAGE SCHEDULE-BUILDING N

BLDG NO	SIGN MARK	DOOR NO	SIGN TYPE	SIGN MATERIAL	SIGN LINE 1	SIGN LINE 2	MTG HEIGHT	MTG CONDITION	MTG LOCATION	REMARKS
N	N100A	N100A	E6	SP	SNACK BAR	-	5'-0"	1	S-1	-
N	N101A	N101A	C2	SP	RESTROOM	-	4'-11"	1	S-1	-
N	N101C	N101A	B1	SP	-	-	4'-11"	5	D-1	-
N	N101D	HR	C2	SP	RESTROOM	-	4'-11"	1	S-1	-
N	N101F	HR	B1	SP	-	-	4'-11"	5	D-1	-
N	N102A	N102A	C3	SP	RESTROOM	-	4'-11"	1	S-1	-
N	N102C	N102A	B2	SP	-	-	4'-11"	5	D-1	-
N	N102D	N102B	C3	SP	RESTROOM	-	4'-11"	1	S-1	-
N	N102F	N102B	B2	SP	-	-	4'-11"	5	D-1	-
N	N103A	N103A	C1	SP	RESTROOM	-	4'-11"	1	S-1	-
N	N103B	N103A	B3	SP	-	-	4'-11"	5	D-1	-
N	N104A	N104A	C1	SP	RESTROOM	-	4'-11"	1	S-1	-
N	N104B	N104A	B3	SP	-	-	4'-11"	5	D-1	-
N	N105A	N105A	E2	SP	STORAGE	-	5'-0"	1	S-1	-
N	N105B	N105A	D3	SP	EXIT	-	4'-11"	1	S-1	-
N	N105C	N105B	E2	SP	STORAGE	-	5'-0"	1	S-1	-
N	N105D	N105B	E3	SP	TEAM ROOM	-	5'-0"	1	S-1	-
N	N106A	N106A	E3	SP	TEAM ROOM	-	5'-0"	1	S-1	-
N	N106B	N106A	D3	SP	EXIT	-	4'-11"	1	S-1	-
N	N106C	N106A	J1	SP	-	-	5'-10"	1	SEE PLANS	REFER TO SIGN TYPE J1 FOR SIGN TEXT
N	N106D	N106A	L1	SP	AT OFFICE	-	5'-0"	1	SEE PLANS	-
N	N107A	N107A	E4	SP	ELECTRICAL	-	5'-0"	1	S-1	-
N	N108A	N108A	E5	SP	CUSTODIAN	-	5'-0"	1	S-1	-

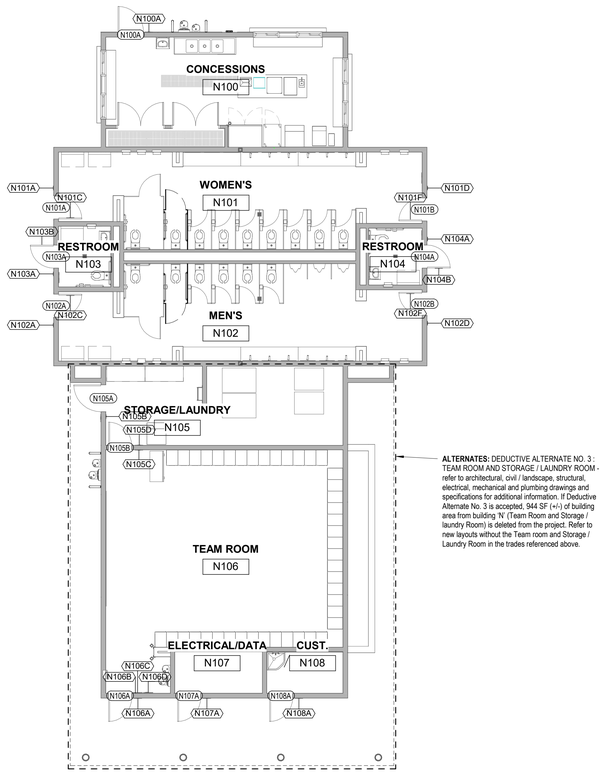

ALTERNATES: DEDUCTIVE ALTERNATE NO. 3 : TEAM ROOM AND STORAGE / LAUNDRY ROOM - refer to architectural, civil / landscape, structural, electrical, mechanical and plumbing drawings and specifications for additional information. If Deductive Alternate No. 3 is accepted, 944 SF (+/-) of building area from building 'N' (Team Room and Storage / laundry Room) is deleted from the project. Refer to new layouts without the Team room and Storage / Laundry Room in the trades referenced above.

A18 SIGNAGE PLAN - BUILDING N
1/8" = 1'-0"

MOUNTING CONDITION:

1. WOOD STUD FRAMED WALL
2. METAL STUD FRAMED WALL
3. CONCRETE AND CONCRETE MASONRY
4. GLASS
5. DOOR
6. SEE PLANS

MOUNTING LOCATION:

DOOR STRIKE (S-1)

DOOR STRIKE AWAY (S-2)

DOOR STRIKE ADJACENT (S-3)

DOOR HINGE (H-1)

DOOR HINGE AWAY (H-2)

DOOR HINGE ADJACENT (H-3)

DOOR MOUNTED (D-1)

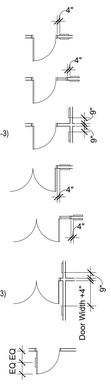

SIGN MATERIAL:

LP = LAMINATED PLASTIC
SP = SOLID PLASTIC
CC = CAST CHARACTERS
VC = FIELD APPLIED VINYL CHARACTER SIGN

MOUNTING HEIGHT:

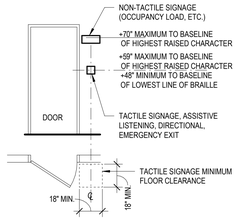

NOTE:
1. FOR SIGNAGE BACKING REQUIREMENTS REFER TO DETAIL
2. ALL TEXT CALL FOR IN THE SIGNAGE DETAILS SHALL BE TACTILE TEXT, UON, TYP.
3. ALL SYMBOLS INCLUDING DIRECTIONAL SYMBOLS CALL FOR IN THE SIGNAGE DETAILS SHALL BE TACTILE SYMBOLS, UON, TYP.
4. SIGNAGE COLORS (UON): BACKGROUND = BLACK SYMBOLS, TEXT = WHITE

TACTILE SIGN TYPES:

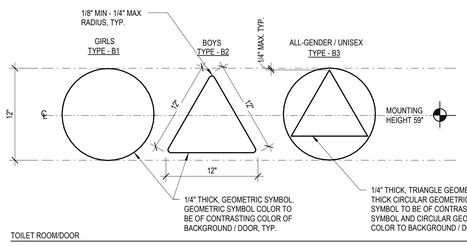

TOILET ROOM/DOOR

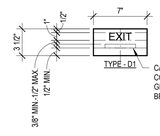

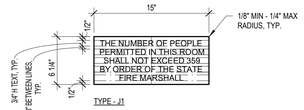

NON-TACTILE SIGN TYPES:

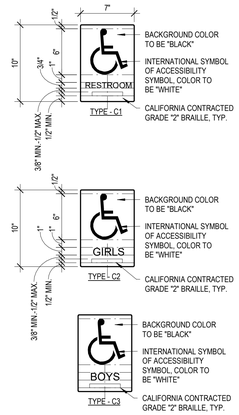

NOTE: DIMENSIONS FOR SIGN TYPE C3 SAME AS C2

ASSISTIVE LISTENING:

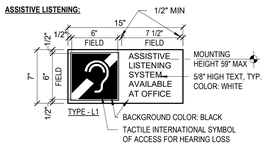

NOTE: REFER TO SHEETS CA2.2 FOR MINIMUM ASSISTIVE LISTENING SYSTEM RECEIVER REQUIREMENTS

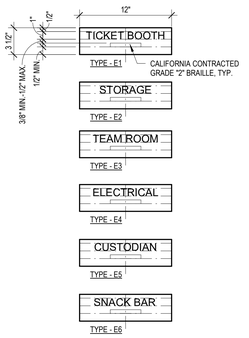

NOTE: DIMENSIONS FOR SIGN TYPE E2 THRU E11 SAME AS E1

A9 SIGNAGE
1 1/2" = 1'-0"

PARLIER HS STADIUM REPLACEMENT
603 3rd Street
Parlier, CA 93648

CLIENT PROJECT NO: 250093
DSA SUBMISSION
DSA APPL. NO.: 02-124002 DSA FILE NO.: 10-H12

PBK
www.pbk.com
559-448-8400
FRESNO, CA

TRUE

LICENSED ARCHITECT
MICHELE GARGANO
No. C-32050
RENEWAL DATE
MAR 31, 2027
STATE OF CALIFORNIA

CLIENT
PARLIER UNIFIED SCHOOL DISTRICT

DATE	PROJECT NUMBER
2026/02/09	250093

DRAWING HISTORY

No.	Description	Date

CHECKED BY: Checker
DRAWN BY: Author

SIGNAGE FLOOR PLAN

CA3.1

Plot Stamp:
6/23/2026 9:33:04 AM

CALGREEN CHECKLIST (1 OF 4)
CA4.1
FOR BLUEBEAM LABELING/OCR:

2025 CALIFORNIA GREEN BUILDING STANDARDS CODE
NONRESIDENTIAL MANDATORY MEASURES, SHEET 1

Y = YES
N/A = NOT APPLICABLE
RESPON. PARTY = RESPONSIBLE PARTY (ie: ARCHITECT, ENGINEER, OWNER, CONTRACTOR, INSPECTOR ETC.)

CHAPTER 3
GREEN BUILDING
SECTION 301 GENERAL

301.1 SCOPE. Buildings shall be designed to include the green building measures specified as mandatory in the application checklists contained in this code. Voluntary green building measures are also included in the application checklists and may be included in the design and construction of structures covered by this code, but are not required unless adopted by a city, county, or city and county as specified in Section 101.7.

301.3 NONRESIDENTIAL ADDITIONS AND ALTERATIONS. [BSC-CG] The provisions of individual sections of Chapter 5 apply to newly constructed buildings, building additions of 1,000 square feet or greater, and/or building alterations with a permit valuation of $200,000 or above (for occupancies within the authority of California Building Standards Commission). Code sections relevant to additions and alterations shall only apply to the portions of the building being added or altered within the scope of the permitted work.

A code section will be designated by a banner to indicate where the code section only applies to newly constructed buildings [N] or to additions and/or alterations [A]. When the code section applies to both, no banner will be used.

301.3.1 Nonresidential additions and alterations that cause updates to plumbing fixtures only:

Note: On and after January 1, 2014, certain commercial real property, as defined in Civil Code Section 1101.3, shall have its noncompliant plumbing fixtures replaced with appropriate water-conserving plumbing fixtures under specific circumstances. See Civil Code Section 1101.1 *et seq.* for definitions, types of commercial real property affected, effective dates, circumstances necessitating replacement of noncompliant plumbing fixtures, and duties and responsibilities for ensuring compliance.

301.3.2 Waste Diversion. The requirements of Section 5.408 shall be required for additions and alterations whenever a permit is required for work.

301.4 PUBLIC SCHOOLS AND COMMUNITY COLLEGES. (see GBSC)
301.5 HEALTH FACILITIES. (see GBSC)

SECTION 302 MIXED OCCUPANCY BUILDINGS

302.1 MIXED OCCUPANCY BUILDINGS. In mixed occupancy buildings, each portion of a building shall comply with the specific green building measures applicable to each specific occupancy.

SECTION 303 PHASED PROJECTS

303.1 PHASED PROJECTS. For shell buildings and others constructed for future tenant improvements, only those code measures relevant to the building components and systems considered to be new construction (or newly constructed) shall apply.

303.1.1 Initial Tenant improvements. The provisions of this code shall apply only to the initial tenant improvements to a project. Subsequent tenant improvements shall comply with the scoping provisions in Section 301.3 non-residential additions and alterations.

ABBREVIATION DEFINITIONS:

HCD	Department of Housing and Community Development
BSC	California Building Standards Commission
DSA-SS	Division of the State Architect, Structural Safety
OSHPD	Office of Statewide Health Planning and Development
LR	Low Rise
HR	High Rise
AA	Additions and Alterations
N	New

CHAPTER 5
NONRESIDENTIAL MANDATORY MEASURES

DIVISION 5.1 PLANNING AND DESIGN
SECTION 5.101 GENERAL

5.101.1 SCOPE
The provisions of this chapter outline planning, design and development methods that include environmentally responsible site selection, building design, building siting and development to protect, restore and enhance the environmental quality of the site and respect the integrity of adjacent properties.

SECTION 5.102 DEFINITIONS

5.102.1 DEFINITIONS
The following terms are defined in Chapter 2 *(and are included here for reference)*

CUTOFF LUMINAIRES. Luminaires whose light distribution is such that the candela per 1000 lamp lumens does not numerically exceed 25 (2.5 percent) at an angle of 90 degrees above nadir, and 100 (10 percent) at a vertical angle of 80 degrees above nadir. This applies to all lateral angles around the luminaire.

TENANT-OCCUPANTS. Building occupants who inhabit a building during its normal hours of operation as permanent occupants, such as employees, as distinguished from customers and other transient visitors.

ZEV. [BSC-CG, DSA-SS] Any vehicle certified to zero-emission standards.

SECTION 5.105 DECONSTRUCTION AND REUSE OF EXISTING STRUCTURES

5.105.1 Scope. [BSC-CG] Effective July 1, 2024, alteration(s) to existing building(s) where the combined altered floor area is 100,000 square feet or greater shall comply with either Section 5.105.2, 5.409.2, or 5.409.3. Addition(s) to existing building(s) where the total floor area combined with the existing building(s) is 100,000 square feet or greater shall comply with either Section 5.105.2, Section 5.409.2, or Section 5.409.3. Effective January 1, 2026, the combined floor area shall be 50,000 square feet or greater.

[DSA-SS] Alteration(s) to existing building(s) where the combined altered floor area is 50,000 square feet or greater shall comply with either Section 5.105.2, 5.409.2, or 5.409.3. Addition(s) to existing building(s) where the total floor area combined with the existing building(s) is 50,000 square feet or greater shall comply with either Section 5.105.2, Section 5.409.2, or Section 5.409.3.

Exception [BSC-CG, DSA-SS]: Combined addition(s) to existing building(s) of two times the area or more of the existing building(s) is not eligible to meet compliance with Section 5.105.2.

5.105.2 Reuse of existing building. An alteration or addition to an existing building shall maintain at a minimum 45 percent combined of the existing building's primary structural elements (foundations; columns, beams, walls, and floors; and lateral elements) and existing building enclosure (roof framing, wall framing and exterior finishes). Window assemblies, insulation, portions of buildings deemed structurally unsound or hazardous, and hazardous materials that are remediated as part of the project shall not be included in the calculation.

5.105.2.1 Verification of compliance. Documentation shall be provided in the construction documents to demonstrate compliance with Section 5.105.2.

Note: Sample Worksheet WS-3 in Chapter 8 may be used to assist in documenting compliance with this section.

5.105.3 Deconstruction (Reserved).

SECTION 5.106 SITE DEVELOPMENT

5.106.1 STORM WATER POLLUTION PREVENTION FOR PROJECTS THAT DISTURB LESS THAN ONE ACRE OF LAND. Newly constructed projects and additions which disturb less than one acre of land, and are not part of a larger common plan of development or sale, shall prevent the pollution of storm water runoff from the construction activities through one or more of the following measures:

5.106.1.1 Local ordinance. Comply with a lawfully enacted storm water management and/or erosion control ordinance.

5.106.1.2 Best Management Practices (BMPs). Prevent the loss of soil through wind or water erosion by implementing an effective combination of erosion and sediment control and good housekeeping BMPs.

1. Soil loss BMPs that should be considered for implementation as appropriate for each project include, but are not limited to, the following:
   a. Scheduling construction activity during dry weather, when possible.
   b. Preservation of natural features, vegetation, soil, and buffers around surface waters.
   c. Drainage swales or lined ditches to control stormwater flow.
   d. Mulching or hydroseeding to stabilize disturbed soils.
   e. Erosion control to protect slopes.
   f. Protection of storm drain inlets (gravel bags or catch basin inserts).
   g. Perimeter sediment control (perimeter silt fence, fiber rolls).
   h. Sediment trap or sediment basin to retain sediment on site.
   i. Stabilized construction exits.
   j. Wind erosion control.
   k. Other soil loss BMPs acceptable to the enforcing agency.
2. Good housekeeping BMPs to manage construction equipment, materials, non-stormwater discharges and wastes that should be considered for implementation as appropriate for each project include, but are not limited to, the following:
   a. Dewatering activities.
   b. Material handling and waste management.
   c. Building materials stockpile management.
   d. Management of washout areas (concrete, paints, stucco, etc.).
   e. Control of vehicle/equipment fueling to contractor's staging area.
   f. Vehicle and equipment cleaning performed off site.
   g. Spill prevention and control.
   h. Other housekeeping BMPs acceptable to the enforcing agency.

5.106.2 STORMWATER POLLUTION PREVENTION FOR PROJECTS THAT DISTURB ONE OR MORE ACRES OF LAND. Comply with all lawfully enacted stormwater discharge regulations for projects that (1) disturb one acre or more of land, or (2) disturb less than one acre of land but are part of a larger common plan of development sale.

Note: Projects that (1) disturb one acre or more of land, or (2) disturb less than one acre of land but are part of the larger common plan of development or sale must comply with the post-construction requirements detailed in the applicable National Pollutant Discharge Elimination System (NPDES) General permit for Stormwater Discharges Associated with Construction and Land Disturbance Activities issued by the State Water Resources Control Board or the Lahontan Regional Water Quality Control Board (for projects in the Lake Tahoe Hydrologic Unit).

The NPDES permits require postconstruction runoff (post-project hydrology) to match the preconstruction runoff (pre-project hydrology) with the installation of postconstruction stormwater management measures. The NPDES permits emphasize runoff reduction through on-site stormwater use, interception, evapotranspiration, and infiltration through nonstructural controls, such as Low Impact Development (LID) practices, and conversation design measures. Stormwater volume that cannot be addressed using nonstructural practices is required to be captured in structural practices and be approved by the enforcing agency.

Refer to the current applicable permits on the State Water Resources Control Board website at: www.waterboards.ca.gov/constructionstormwater. Consideration to the stormwater runoff management measures should be given during the initial design process for appropriate integration into site development.

5.106.4 BICYCLE PARKING. For buildings within the authority of California Building Standards Commission as specified in Section 103, comply with Section 5.106.4.1. For buildings within the authority of the Division of the State Architect pursuant to Section 105, comply with Section 5.106.4.2

5.106.4.1 Bicycle parking. [BSC-CG] Comply with Sections 5.106.4.1.1 and 5.106.4.1.2; or meet the applicable local ordinance, whichever is stricter.

5.106.4.1.1 Short-term bicycle parking. If the new project or an addition or alteration is anticipated to generate visitors, provide permanently anchored bicycle racks within 200 feet of the visitors' entrance, readily visible to passers-by, for 20% of the peak daily visitors, with a minimum of one two-bike capacity rack.

Exception: Additions or alterations which add nine or less visitor vehicular parking spaces.

5.106.4.1.2 Long-term bicycle parking. Acceptable bicycle parking facility for Section 5.106.4.1.2.1, 5.106.4.1.2.2 and 5.106.4.1.23 shall be conveniently located near the street and shall meet one of the following:

1. Covered, lockable enclosures with permanently anchored racks for bicycles;
2. Lockable bicycle rooms with permanently anchored racks; or
3.Lockable, permanently anchored bicycle lockers.

Calculations for bicycle parking requirements shall be rounded up to the nearest whole number.

5.106.4.1.2.1
For new buildings with tenant spaces, provide secure bicycle parking for 10 percent of the tenant-occupants, with a minimum of one bicycle parking facility.

5.106.4.1.2.2
For additions or alternations, provide secure bicycle parking for 10 percent of the tenant-occupants being added, with a minimum of one bicycle parking facility.

5.106.4.1.2.3
For new shell buildings in phased projects, provide secure bicycle parking for 10 percent of the anticipated tenant-occupants, with a minimum of one bicycle parking facility.

5.106.4.2 Bicycle parking. [DSA-SS] For public schools and community colleges, comply with Sections 5.106.4.2.1 and 5.106.4.2.2

5.106.4.2.1 Student bicycle parking. Provide permanently anchored bicycle racks conveniently accessed with a minimum of four two-bike capacity racks per new building.
5.106.4.2.2 Staff bicycle parking. Provide permanent, secure bicycle parking conveniently accessed with a minimum of two staff bicycle parking spaces per new building. Acceptable bicycle parking facilities shall be convenient from the street or staff parking area and shall meet one of the following:

1. Covered, lockable enclosures with permanently anchored racks for bicycles;
2. Lockable bicycle rooms with permanently anchored racks; or
3. Lockable, permanently anchored bicycle lockers.

5.106.5.3 Electric vehicle (EV) charging. [N] [BSC-CG] Construction to provide electric vehicle infrastructure and facilitate electric vehicle charging shall comply with Section 5.106.5.3.1 EV capable spaces, Section 5.106.5.3.2 Electric vehicle charging stations and associated Table 5.106.5.3.1, or Section 5.106.5.3.6 Electric vehicle charging stations (EVCS)—Power allocation method and associated Table 5.106.5.3.6 and shall be provided in accordance with regulations in the *California Building Code* and the *California Electrical Code*.

Exceptions:
1. On a case-by-case basis where the local enforcing agency has determined compliance with this section is not feasible based upon one of the following conditions:
   a. Where there is no local utility power supply
   b. Where the local utility is unable to supply adequate power.
   c. Where there is evidence suitable to the local enforcement agency substantiating the local utility infrastructure design requirements, directly related to the implementation of Section 5.106.5.3, may adversely impact the construction cost of the project.
2. Areas of parking facilities served by parking lifts, including but not limited to, automated mechanical-access open parking garages as defined in the California Building Code; or parking facilities otherwise incapable of supporting electric vehicle charging.

5.106.5.3.1 EV capable spaces. [N] EV capable spaces shall be provided in accordance with Table 5.106.5.3.1 and the following requirements:
1. Raceways complying with the California Electrical Code and no less that 1-inch (25 mm) diameter shall be provided and shall originate at a service panel or a subpanel(s) serving the area, and shall terminate in close proximity to the proposed location of the EV capable and into a suitable listed cabinet, box,enclosure or equivalent. A common raceway may be used to serve multiple EV charging spaces.
2. A service panel or subpanel (s) shall be provided with panel space and electrical load capacity for a dedicated 208/240 volt, 40-ampere minimum branch circuit for each EV capable space, with delivery of 30-ampere minimum to an installed EVSE at each EVCS.
3. The electrical system and any on-site distribution transformers shall have sufficient capacity to supply full rated amperage at each EV capable space.
4. The service panel or subpanel circuit directory shall identify the reserved overcurrent protective devices space(s) as "EV CAPABLE". The raceway termination location shall be permanently and visibly marked as "EV CAPABLE."

Note: A parking space served by electric vehicle supply equipment or designed as a future EV charging space shall count as at least one standard automobile parking space only for the purpose of complying with any applicable minimum parking space requirements established by an enforcement agency. See vehicle Code Section 22511.2 for further details.

TABLE 5.106.5.3.1 EV Capable Spaces and EVCS

TOTAL NUMBER OF ACTUAL PARKING SPACES	NUMBER OF REQUIRED EV CAPABLE SPACES	OTHER THAN OFFICE AND RETAIL NUMBER OF REQUIRED ECVS[a,2,3]	OFFICE AND RETAIL NUMBER OF REQUIRED ECVS[a,2,3]
1-9	0	0	0
10-25	4	2	3
26-50	8	4	6
51-75	13	6	8
76-100	17	8	13
101-150	25	12	19
151-200	35	18	26
201 AND OVER	20 percent of actual parking spaces[1]	50 percent of EV capable spaces[1]	75 percent of EV capable spaces[1]

1. Calculation for spaces shall be rounded up to the nearest whole number.
2. Each EVCS shall reduce the number of required capable spaces by the same number.
3. At least one Level 2 EVSE shall be provided.

5.106.5.3.2 Electric vehicle charging stations (EVCS) EV capable spaces shall be provided with electric vehicle supply equipment (EVSE) to create EVCS in the number indicated in Table 5.106.5.3.1. The EVCS required by Table 5.106.5.3.1 shall be provided with Level 2 EVSE or DCFC as permitted in Section 5.106.5.3.2.3. At least one Level 2 EVSE shall be provided.

One EV charger with multiple connectors capable of charging multiple EVs simultaneously shall be permitted if the electrical load capacity required by Section 5.106.5.3.1 for each EV capable space is accumulatively supplied to the EV charger.

5.106.5.3.2.1 Receptacle configurations. 208/240V EV charging receptacles shall comply with one of the following configurations:
1. For 20-ampere receptacles, NEMA 6-20R
2. For 30-ampere receptacles, NEMA 14-30R
3. For 50-ampere receptacles, NEMA 14-50R

5.106.5.3.2.2 EV charger connectors. EV chargers shall be equipped with SAE J1772 with a maximum output 240 Volts AC or SAE J3400 connectors.When using level 2 SAE J3400 SAE connectors, supplied by a 480 V 3-phase service, at least 20 percent of the EV charger connectors shall be SAE J1772 with a maximum output 240 Volts AC.

5.106.5.3.2.3 The installation of each DCFC EVSE shall be permitted to reduce the minimum number of required EV capable spaces without EVSE or EVCS with Level 2 EVSE by five and reduce proportionally the required electrical load capacity to the service panel or subpanel.

5.106.5.3.2.4 The installation of two low power Level 2 EV charging receptacles shall be permitted to reduce the minimum number of required EV capable spaces without EVSE in Table 5.106.5.3.1 by one.

5.106.5.3.2.4.1 Raceway capacity requirements. To allow for future upgrades to the electrical conductors serving low power Level 2 charging receptacles, the listed raceway serving such receptacles shall be sized to allow the installation of a dedicated 208/240-volt 40-ampere branch circuit. Where no raceway is used, the conductors shall be sized to accommodate a 208/240-volt 40-ampere receptacle.

5.106.5.3.3 Use of automatic load management systems (ALMS).
ALMS shall be permitted for EVCS. When ALMS is installed, the required electrical load capacity specified in Section
5.106.5.3.1 for each EVCS may be reduced when serviced by an EVSE controlled by an ALMS. Each EVSE controlled by an ALMS shall deliver a minimum 30 amperes to an EV when charging one vehicle and shall deliver a minimum 3.3 kW while simultaneously charging multiple EVs.

5.106.5.3.4 Accessible EVCS.
When EVSE is installed, accessible EVSC shall be provided in accordance with the *California Building Code*, Chapter 11B, Section 11B-228.3.

Note: For EVCS signs, refer to Caltrans Traffic Operations Policy Directive 13-01 (Zero Emission Vehicle Signs and Pavement Markings) or its successor(s).

5.106.5.3.4 Accessible electric vehicle charging station (EVCS). When EVSE is installed, accessible EVCS shall be provided in accordance with the *California Building Code*, Chapter 11B, Section 11B-228.3.

5.106.5.3.5 Electric vehicle charging station signage. Electric vehicle charging stations shall be identified by signage or pavement markings in compliance with Caltrans Traffic Operations Policy Directive 13-01 (Zero Emission Vehicle Signs and Pavement Markings) or its successor(s).

Power allocation method shall include the following:
1. Use any kVA combination of EV capable spaces, low power Level 2, Level 2 or DCFC EVSEs.
2. At least one Level 2 EVSE shall be provided.

5.106.5.3.6 Electric vehicle charging stations (EVCS)—power allocation method. The power allocation method may be used as an alternative to the requirements in Section 5.106.5.3.1, Section 5.106.5.3.2 and associated Table 5.106.5.3.1. Use Table 5.106.5.3.6 to determine the total power in kVA required based on the total number of actual parking spaces.

TABLE 5.106.5.3.6 Power Allocation Method

TOTAL NUMBER OF ACTUAL PARKING SPACES	MINIMUM TOTAL kVA @ 6.6 kVA	OTHER THAN OFFICE AND RETAIL TOTAL kVA REQUIRED IN ANY COMBINATION OF EV CAPABLE[3,4] LOW POWER LEVEL 2, LEVEL 2[1,2] OR DCFC	OFFICE AND RETAIL TOTAL kVA REQUIRED IN ANY COMBINATION OF EV CAPABLE[4,5] LOW POWER LEVEL 2, LEVEL 2[1,2] OR DCFC
1-9	0	0	0
10-25	26.4	26.4	26.4
26-50	52.8	52.8	52.8
51-75	85.8	85.8	85.8
76-100	112.2	112.2	112.2
101-150	165	165	165
151-200	231	231	231
201 AND OVER	20 percent of actual parking spaces x 6.6	Total required kVA = P × 20 × 6.6 Where P = Parking spaces in facility	Total required kVA = P × 20 × 6.6 Where P = Parking spaces in facility

1. Level 2 EVSE @ 6.6 kVA minimum.
2. At least one Level 2 EVSE shall be provided.
3. Maximum allowed kVA to be utilized for EV capable spaces is 75 percent.
4. If EV capable spaces are utilized, they shall meet the requirements of Section 5.106.5.3.1 EV capable spaces.
5. For Office and Retail buildings the maximum allowed kVA to be utilized for EV capable is 25 percent.

5.106.5.3.6.1 Receptacle configurations. 208/240V EV charging receptacles shall comply with one of the following configurations:
1. For 20-ampere receptacles, NEMA 6-20R.
2. For 30-ampere receptacles, NEMA 14-30R.
3. For 50-ampere receptacles, NEMA 14-50R.

5.106.5.3.6.2 EV Charger connectors. EV chargers shall be equipped with SAE J1772 with a maximum output 240 Volts AC or SAE J3400 connectors. When using level 2 SAE J3400 connectors, supplied by a 480 V 3-phase service, at least 20 percent of the EV charger connectors shall be SAE J1772 with a maximum output 240 Volts AC.

5.106.5.3.6.3 Raceway capacity requirements. To allow for future upgrades to the electrical conductors serving low power Level 2 charging receptacles, the listed raceway serving such receptacles shall be sized to allow the installation of a dedicated 208/240-volt 40-ampere branch circuit. Where no raceway is used, the conductors shall be sized to accommodate a 208/240-volt 40-ampere receptacle.

5.106.5 Additions or alterations to existing buildings or parking facilities [A]. [BSC-CG] Existing buildings or parking facilities being modified by one of the following shall comply with Section 5.106.5.4.1 or 5.106.5.4.2. When EVSE is installed, accessible EVCS shall be provided in accordance with the *California Building Code*, Chapter 11B, Section 11B-228.3.

1. When the scope of construction work includes an increase in power supply to an electric service panel as part of a parking facility addition or alteration.
2. When a new photovoltaic system is installed covering existing parking spaces.
3. When additions or alterations to existing buildings are triggered pursuant to code Section 301.3 and the scope of work includes an increase in power supply to an electric service panel.

Exceptions:
1. On a case-by-case basis where the local enforcing agency has determined compliance with this section is not feasible based upon one of the following conditions:
   a. Where there is no local utility power supply.
   b. Where the local utility is unable to supply adequate power.
   c. Where there is evidence suitable to the local enforcement agency substantiating that additional local utility infrastructure design requirements, directly related to the implementation of Section 5.106.5.3, may adversely impact the construction cost of the project.
   d. Where demonstrated as impracticable excluding local utility service or utility infrastructure issues.
2. Remote parking facilities that do not have access to the building service panel.
3. Parking area lighting upgrades where no trenching is part of the scope of work.
4. Emergency repairs, including but not limited to water line break in parking facilities, natural disaster repairs, etc.

5.106.5.4.1 Existing buildings or parking areas without previously installed EV capable infrastructure [A]. When EV capable infrastructure does not exist at an existing parking facility or building, and the parking facility or building undergoes an addition or alteration listed in Section 5.106.5.4, construction shall include electric vehicle charging in compliance with either Section 5.106.5.3 and associated Table 5.106.5.3.1, or Section 5.106.5.3.6 and associated Table 5.106.5.3.6 for the total number of actual parking spaces being added or altered.

5.106.5.4.2 Existing buildings or parking areas with previously installed EV capable infrastructure [A]. When EV capable infrastructure is available at an existing parking facility or building, and the parking facility or building is undergoing an addition or alteration listed in Section 5.106.5.4, construction shall include electric vehicle charging in compliance with either Section 5.106.5.3 and associated Table 5.106.5.3.1, or Section 5.106.5.3.6 and associated Table 5.106.5.3.6. Install EVCS at all existing EV capable spaces, utilizing the existing EV capable allocated power and infrastructure for the total number of actual parking spaces being added or altered, prior to adding any new EV capable spaces. If the area being added or altered exceeds the existing EV capable capacity, allocated power and infrastructure, provide additional EV charging as needed to comply with this section.

5.106.5.5 Electric vehicle (EV) charging: medium-duty and heavy-duty. [N] [BSC-CG] Construction shall comply with Section 5.106.5.5.1 to facilitate future installation of electric vehicle supply equipment (EVSE). Construction for warehouses, grocery stores and retail stores, office buildings, and manufacturing facilities with planned off-street loading spaces shall also comply with Section 5.106.5.5.1 for future installation of medium- and heavy-duty EVSE.

Exceptions:
1. On a case-by-case basis where the local enforcing agency has determined compliance with this section is not feasible based upon one of the following conditions:
   a. Where there is no local utility power supply.
   b. Where the local utility is unable to supply adequate power.
   c. Where there is evidence suitable to the local enforcing agency substantiating that additional local utility infrastructure design requirements, directly related to the implementation of Section 5.106.5.3, may adversely impact the construction cost of the project.

When EVSE(s) is/are installed, it shall be in accordance with the *California Building Code*, the *California Electrical Code* and as follows:

5.106.5.5.1 Electric vehicle charging readiness requirements for warehouses, grocery stores, office buildings, and manufacturing facilities and retail stores with planned off-street loading spaces. [N]

In order to avoid future demolition when adding EV supply and distribution equipment, spare raceway(s) or busway(s) and adequate capacity for transformer(s), service panel(s) or subpanel(s) shall be installed at the time of construction in accordance with the *California Electrical Code*. Construction plans and specifications shall include, but are not limited to, the following:

1. The transformer, main service equipment and subpanels shall meet the minimum power requirement in Table 5.106.5.5.1 to accommodate the dedicated branch circuits for the future installation of EVSE.
2. The construction documents shall indicate one or more location(s) convenient to the planned off-street loading space(s) reserved for medium- and heavy-duty ZEV charging cabinets and charging dispensers, and a pathway reserved for routing of conduit from the termination of the raceway(s) or busway(s) to the charging cabinet(s) and dispenser(s), as shown in Table 5.106.5.5.1.
3. Raceway(s) or busway(s) originating at a main service panel or a subpanel(s) serving the area where potential future medium- and heavy-duty EVSE will be located and shall terminate in close proximity to the potential future location of the charging equipment for medium- and heavy-duty vehicles.
4. The raceway(s) or busway(s) shall be of sufficient size to carry the minimum additional system load to the future location of the charging for medium- and heavy-duty ZEVs as shown in Table 5.106.5.5.1.

TABLE 5.106.5.5.1 RACEWAY CONDUIT AND PANEL POWER REQUIREMENTS FOR MEDIUM- AND HEAVY-DUTY EVSE [N]

BUILDING TYPE	BUILDING SIZE (SQ. FT.)	NUMBER OF OFF-STREET LOADING SPACES	ADDITIONAL CAPACITY REQUIRED (KVA) FOR RACEWAY & BUSWAY AND TRANSFORMER & PANEL
Grocery	10,000 to 90,000	1 or 2	200
		3 or Greater	400
	Greater than 90,000	1 or Greater	400
Manufacturing Facilities	10,000 to 50,000	1 or 2	200
	10,000 to 50,000	3 or Greater	400
	Greater than 50,000	1 or Greater	400
Office Buildings	10,000 to 135,000	1 or 2	200
	10,000 to 135,000	3 or Greater	400
	Greater than 135,000	1 or Greater	400
Retail	10,000 to 135,000	1 or 2	200
		3 or Greater	400
	Greater than 135,000	1 or Greater	400
Warehouse	20,000 to 256,000	1 or 2	200
		3 or Greater	400
	Greater than 256,000	1 or Greater	400

5.106.5.6 Electric vehicle (EV) charging at public schools and community colleges. [DSA-SS] Electric vehicle infrastructure and electric vehicle charging stations shall comply with Section 5.106.5.6 and shall be provided in accordance with regulations in the California Building Code and the California Electrical Code.

Exceptions:
1. On a case-by-case basis where compliance with this section has been demonstrated to be not feasible based upon one of the following conditions,and with concurrence by the Division of the State Architect (DSA), compliance with Section 5.106.5.6 shall not be required.
   a. Where there is no local utility power supply.
   b. Where the local utility is unable to supply adequate power.
   c. The installation of EVCS is impracticable.
2. Parking spaces accessible only by automated mechanical car parking systems are not required to comply with Section 5.106.5.6.

5.106.5.6.1 EV capable spaces. EV capable spaces shall be provided in accordance with Table 5.106.5.6.1 and the following requirements:

1. Raceways complying with the California Electrical Code and no less than 1-inch (25 mm) diameter shall be provided and shall originate at a service panel or a subpanel(s) serving the area and shall terminate in close proximity to the proposed location of the EV capable space and into a suitable cabinet, box, enclosure or equivalent. A common raceway may be used to serve multiple EV capable spaces.

2. A service panel or subpanel(s) shall be provided with panel space and electrical load capacity for a dedicated 208/240 volt, 40-ampere minimum branch circuit for each EV capable space, with delivery of 30-ampere minimum to an installed EVSE at each EVCS.

3. The electrical system and any on-site distribution transformers shall have sufficient capacity to supply full rated amperage at each EV capable space.

4. The service panel or subpanel circuit directory shall identify the reserved overcurrent protective device space(s) as "EV CAPABLE." The raceway termination location shall be permanently and visibly marked as "EV CAPABLE."

DISCLAIMER: *THIS DOCUMENT IS PROVIDED AND INTENDED TO BE USED AS A MEANS TO INDICATE AREAS OF COMPLIANCE WITH THE CALIFORNIA GREEN BUILDING STANDARDS (CALGREEN) CODE. DUE TO THE VARIABLES BETWEEN BUILDING DEPARTMENT JURISDICTIONS, THIS CHECKLIST IS TO BE USED ON AN INDIVIDUAL PROJECT BASIS AND MAY BE MODIFIED BY THE END USER TO MEET THOSE INDIVIDUAL NEEDS. THE END USER ASSUMES ALL RESPONSIBILITY ASSOCIATED WITH THE USE OF THIS DOCUMENT, INCLUDING VERIFICATION WITH THE FULL CODE.*

PARLIER HS STADIUM REPLACEMENT
603 3rd Street
Parlier, CA 93648
CLIENT PROJECT NO: 250093
DSA SUBMISSION
DSA APPL. NO.: 02-124002 DSA FILE NO.: 10-H12

PRK
FRESNO, CA
559-448-8400
www.prk.com

PARLIER UNIFIED SCHOOL DISTRICT

LICENSED ARCHITECT
MICHELE GARGANO
No. C-32550
RENEWAL DATE
MAR 31, 2027
STATE OF CALIFORNIA

CLIENT
PARLIER UNIFIED SCHOOL DISTRICT
DATE 2026/02/09
PROJECT NUMBER 250093
DRAWING HISTORY

No.	Description	Date

CHECKED BY: Checker
DRAWN BY: Author

CALGREEN CHECKLIST (1 OF 4)

CA4.1

Plot Stamp:
6/23/2026 9:35:08 AM

CALGREEN CHECKLIST (2 OF 4)
CA4.2
FOR BLUEBEAM LABELING/OCR:

2025 CALIFORNIA GREEN BUILDING STANDARDS CODE
NONRESIDENTIAL MANDATORY MEASURES, SHEET 2

Y = YES
N/A = NOT APPLICABLE
RESPON. PARTY = RESPONSIBLE PARTY (ie: ARCHITECT, ENGINEER, OWNER, CONTRACTOR, INSPECTOR ETC.)

TABLE 5.106.5.6.1		
TOTAL NUMBER OF ACTUAL PARKING SPACES	**NUMBER OF REQUIRED EV CAPABLE SPACES**	**NUMBER OF REQUIRED EVCS[2]**
0-9	0	0
10-25	4	1
26-50	8	2
51-75	13	3
76-100	17	4
101-150	25	6
151-200	35	9
201 AND OVER	20 percent of total spaces[1]	25 percent of EV capable spaces[1]

1. Calculation for spaces shall be rounded up to the nearest whole number.
2. Each EVCS shall reduce the number of required EV capable spaces by the same number.

5.106.5.6.2 Electric vehicle charging stations (EVCS). EV capable spaces shall be provided with EVSE to create EVCS in the number indicated in Table 5.106.5.6.1 and shall comply with Section 5.106.5.6.2. EVCS shall be serviced by Level 2 or Direct Current.Fast Charging (DCFC) EVSE, or with EVSE in any combination of Level 2 and DCFC. Accessible EVCS shall be provided in accordance with *California Building Code* Chapter 11B.

5.106.5.6.2.1 Reduced number of EV capable spaces. The installation of each DCFC EVSE shall be permitted to reduce the minimum number of required EV capable spaces indicated in Table 5.106.5.6.1 by five and reduce proportionally the required electrical load capacity to the service panel or subpanel.

5.106.5.6.2.2 Multiple connectors. EVSE with multiple vehicle connectors capable of charging multiple EVs simultaneously shall be permitted if the electrical load capacity required by Section 5.106.5.6.1 for each EV capable space is accumulatively supplied to the EVSE.

5.106.5.6.2.3 Use of automatic load management systems (ALMS). ALMS shall be permitted for EVCS installed in accordance with Section 5.105.5.6.2. When ALMS is installed, the required electrical load capacity specified in Section 5.106.5.6.1 for each EVCS may be reduced when serviced by an EVSE controlled by an ALMS. Each EVSE controlled by an ALMS shall deliver a minimum 30 amperes to an EV when charging one vehicle and shall deliver a minimum 3.3 kW while simultaneously charging multiple EVs.

5.106.5.6.3 EVCS alternative compliance. In lieu of compliance with Section 5.106.5.6.2, EVCS shall be provided with Level 1, low power Level 2, or Level 2, or any combination of Level 1, low power Level 2 or Level 2 EVSE such that the total power supplied by the combination of EVSE meets the minimum power indicated in Table 5.106.5.6.3, based on the total number of actual parking spaces in each parking facility.

TABLE 5.106.5.6.3	
NUMBER OF PARKING SPACES IN A PARKING FACILITY	**MINIMUM TOTAL POWER (KVA) REQUIRED FOR EVCS**
0-9	0
10-25	7
26-50	14
51-75	20
76-100	27
101-150	40
151-200	60
201 AND OVER	Total required KVA = P × .05 × 6.6 Where P = Parking spaces in facility

5.106.5.6.4 EVCS for alterations of or additions to parking facilities. Alterations of or additions to parking facilities shall provide EVCS in compliance with Section 5.106.5.6.4. The installation of infrastructure for EV capable spaces required to be provided without EVSE shall not be required.

5.106.5.6.4.1 Alterations of and additions to parking facilities. EVCS shall be provided in accordance with the number indicated in Table 5.106.5.6.1 or minimum power indicated in Table 5.106.5.6.3 when the scope of work includes an increase in power supply to an electric panel serving light fixtures illuminating the parking area or when area containing parking spaces is added to a parking facility. The number of required EVCS shall be based on the total number of existing and new parking spaces in the parking facility.

5.106.5.6.4.2 Alterations consisting of the installation of photovoltaic systems. EVCS shall be provided in accordance with the number indicated in Table 5.106.5.6.1 or maximum power indicated in Table 5.106.5.6.3 when a new photovoltaic system is installed in an existing parking facility.

5.106.5.6.5 Requirement to install EVSE. Level 2 EVSE shall be provided in all existing EV capable spaces to create EVCS when a project is required by California Administrative Code Section 4-309 to be submitted for plan approval to the Division of the State Architect. When EVSE is installed in existing EV capable spaces, accessible EVCS shall be provided in accordance with *California Building Code* Chapter 11B.

Exception: Projects in which improvements in parking areas consist only of accessibility improvements are not required to comply with Section 5.106.5.6.5.

5.106.8 LIGHT POLLUTION REDUCTION. [N]. I Outdoor lighting systems shall be designed and installed to comply with the following:

1. The minimum requirements in the California Energy Code for Lighting Zones 0-4 as defined in Chapter 10, Section 10-114 of the California Administrative Code; and
2. Backlight (B) ratings as defined in IES TM-15-11 (shown in Table A-1 in Chapter 8);
3. Uplight and Glare ratings as defined in California Energy Code (shown in Tables 130.2-A and 130.2-B in Chapter 8) and
4. Allowable BUG ratings not exceeding those shown in Table 5.106.8, [N] or Comply with a local ordinance lawfully enacted pursuant to Section 101.7, whichever is more stringent.

Exceptions: [N]

1. Luminaires that qualify as exceptions in Sections 130.2 (b) and 140.7 of the California Energy Code.
2. Emergency lighting.
3. Building facade meeting the requirements in Table 140.7-B of the California Energy Code, Part 6.
4. Custom lighting features as allowed by the local enforcing agency, as permitted by Section 101.8 Alternate materials, designs and methods of construction.
5. Luminaires with less than 6,200 initial luminaire lumens.

TABLE 5.106.8 [N] MAXIMUM ALLOWABLE BACKLIGHT, UPLIGHT AND GLARE (BUG) RATINGS [1,2]					
ALLOWABLE RATING	**LIGHTING ZONE LZ0**	**LIGHTING ZONE LZ1**	**LIGHTING ZONE LZ2**	**LIGHTING ZONE LZ3**	**LIGHTING ZONE LZ4**
MAXIMUM ALLOWABLE BACKLIGHT RATING [3]					
Luminaire greater than 2 mounting heights (MH) from property line	N/A	No Limit	No Limit	No Limit	No Limit
Luminaire back hemisphere is 1-2 MH from property line	N/A	B2	B3	B4	B4
Luminaire back hemisphere is 0.5-1 MH from property line	N/A	B1	B2	B3	B3
Luminaire back hemisphere is less than 0.5 MH from property line	N/A	B0	B0	B1	B2
MAXIMUM ALLOWABLE UPLIGHT RATING (U)					
For area lighting [3]	N/A	U0	U0	U0	U0
For all other outdoor lighting,including decorative luminaires	N/A	U1	U2	U3	UR
MAXIMUM ALLOWABLE GLARE RATING [3] (G)					
MAXIMUM ALLOWABLE GLARE RATING [3] (G)	N/A	G1	G2	G3	G4
MAXIMUM ALLOWABLE GLARE RATING [3] (G)	N/A	G0	G1	G1	G2
MAXIMUM ALLOWABLE GLARE RATING [3] (G)	N/A	G0	G0	G1	G1
MAXIMUM ALLOWABLE GLARE RATING [3] (G)	N/A	G0	G0	G0	G1

1. IESNA Lighting Zones 0 and 5 are not applicable; refer to Lighting Zones as defined in the *California Energy Code* and Chapter 10 of the *California Administrative Code*.
2. For property lines that abut public walkways, bikeways, plazas and parking lots, the property line may be considered to be 5 feet beyond the actual property line for purpose of determining compliance with this section. For property lines that abut public roadways and public transit corridors, the property line may be considered to be the centerline of the public roadway or public transit corridor for the purpose of determining compliance with this section.
3. General lighting luminaires in areas such as outdoor parking, sales or storage lots shall meet these reduced ratings. Decorative luminaries located in these areas shall meet *U*-value limits for "all other outdoor lighting"

5.106.8.1 Facing- Backlight
Luminaries within 2MH of a property line shall be oriented so that the nearest property line is behind the fixture, and shall comply with the backlight rating specified in Table 5.106.8 based on the lighting zone and distance to the nearest point of that property line.

Exception: Corners. If two property lines (or two segments of the same property line) have equidistant point to the luminaire, then the luminaire may be oriented so that the intersection of the two lines (the corner) is directly behind the luminaire. The luminaire shall still use the distance to the nearest points(s) on the property lines to determine the required backlight rating.

5.106.8.2 Facing-Glare.
For luminaires covered by 5.106.8.1, if a property line also exists within or extends into the front hemisphere within 2MH of the luminaire then the luminaire shall comply with the more stringent glare rating specified in Table 5.106.8 based on the lighting zone and distance to the nearest point on the nearest property line within the front hemisphere.

Note: [N]
1.See also *California Building Code*, Chapter 12, Section 1205.6 for college campus lighting requirements for parking facilities and walkways.
2.Refer to Chapter 8 (Compliance Forms, Worksheets and Reference Material) for IES TM-15-11 Table A-1, *California Energy Code* Tables 130.2-A and 130.2-B.
3. Refer to the *California Building Code* for requirements for additions and alterations.

5.106.10 GRADING AND PAVING. Construction plans shall indicate how site grading or a drainage system will manage all surface water flows to keep water from entering buildings. Examples of methods to manage surface water include, but are not limited to, the following:

1. Swales.
2. Water collection and disposal systems.
3. French drains.
4. Water retention gardens.
5. Other water measures which keep surface water away from buildings and aid in groundwater recharge.
   Exception: Additions and alterations not altering the drainage path.

5.106.12 SHADE TREES [DSA-SS]. Shade Trees shall be planted to comply with Sections 5.106.12.1, 5.106.12.2, and 5.106.12.3. Percentages shown shall be measured at noon on the summer solstice. Landscape irrigation necessary to establish and maintain tree health shall comply with Section 5.304.6.

5.106.12.1 Surface parking areas. Shade tree plantings, minimum #10 container size or equal, shall be installed to provide shade over 50 percent of the parking area within 15 years.

Exceptions: Surface parking area covered by solar photovoltaic shade structures with roofing materials that comply with Table A5.106.11.2.2 in Appendix A5 shall be permitted in whole or in part in lieu of shade tree planting.

5.106.12.2 Landscape areas. Shade tress plantings, minimum #10 container size or equal shall be installed to provide shade of 20% of the landscape area within 15 years.

Exceptions: Playfields for organized sport activity are not included in the total area calculation.

5.106.12.3. Hardscape areas. Shade tree plantings, minimum #10 container size or equal shall be installed to provide shade over 20 percent of the hardscape area within 15 years.

Exceptions:
1. Walks, hardscape areas covered by solar photovoltaic shade structures or shade structures with roofing materials that comply with Table A5.106.11.2.2 in Appendix A5 shall be permitted in whole or in part in lieu of shade tree planting.
2. Designated and marked play areas of organized sport activity are not included in the total area calculation.

DIVISION 5.2 ENERGY EFFICIENCY

SECTION 5.201 GENERAL

5.201.1 Scope [BSC-CG]. *California Energy Code [DSA-SS].* For the purposes of mandatory energy efficiency standards in this code, the California Energy Commission will continue to adopt mandatory building standards.

DIVISION 5.3 WATER EFFICIENCY AND CONSERVATION

SECTION 5.301 GENERAL

5.301.1 Scope. The provisions of this chapter shall establish the means of conserving water use indoors, outdoors and in wastewater conveyance.

SECTION 5.302 DEFINITIONS

5.302.1 Definitions. The following terms are defined in Chapter 2 *(and are included here for reference)*

EVAPOTRANSPIRATION ADJUSTMENT FACTOR (ETAF) [DSA-SS]. An adjustment factor when applied to reference evapotranspiration that adjusts for plant factors and irrigation efficiency, which ae two major influences on the amount of water that needs to be applied to the landscape.

FOOTPRINT AREA [DSA-SS]. The total area of the furthest exterior wall of the structure projected to natural grade, not including exterior areas such as stairs, covered walkways, patios and decks.

METERING FAUCET. A self-closing faucet that dispenses a specific volume of water for each actuation cycle. The volume or cycle duration can be fixed or adjustable.

GRAYWATER. Pursuant to Health and Safety Code Section 17922.12, "graywater" means untreated wastewater that has not been contaminated by any toilet discharge, has not been affected by infectious, contaminated, or unhealthy bodily wastes, and does not present a threat from contamination by unhealthful processing, manufacturing, or operating wastes. "Graywater" includes, but is not limited to wastewater from bathtubs, showers, bathroom washbasins, clothes washing machines and laundry tubs, but does not include waste water from kitchen sinks or dishwashers.

MODEL WATER EFFICIENT LANDSCAPE ORDINANCE (MWELO). The California ordinance regulating landscape design, installation and maintenance practices that will ensure commercial, multifamily and other developer installed landscapes greater than 2500 square feet meet an irrigation water budget developed based on landscaped area and climatological parameters.

MODEL WATER EFFICIENT LANDSCAPE ORDINANCE (MWELO). [HCD] The California model ordinance (California Code of Regulations, Title 23, Division 2, Chapter 2.7), regulating landscape design, installation and maintenance practices. Local agencies are required to adopt the updated MWELO, or adopt a local ordinance at least as effective as the MWELO.

POTABLE WATER. Water that is drinkable and meets the U.S. Environmental Protection Agency (EPA) Drinking Water Standards. See definition in the California Plumbing Code, Part 5.

POTABLE WATER. [HCD] Water that is satisfactory for drinking, culinary, and domestic purposes, and meets the U.S. Environmental Protection Agency (EPA) Drinking Water Standards and the requirements of the Health Authority Having Jurisdiction.

SPECIAL LANDSCAPE AREA (SLA). [DSA-SS] An area of the landscape dedicated solely to edible plants, planting areas used for educational purposes, recreational areas, areas irrigated with recycled water, water features using recycled water, and where turf provides a playing surface or gathering space.

SUBMETER. [HCD 1] A secondary device beyond a meter that measures water consumption of an individual rental unit within a multiunit residential structure or mixed-use residential and commercial structure. (See Civic Code Section 1954.202 (g) and Water code Section 517 for additional details.)

SECTION 5.303 INDOOR WATER USE

5.303.1 METERS. Separate submeters or metering devices shall be installed for the uses described in Sections 503.1.1 and 503.1.2.

5.303.1.1 Buildings in excess of 50,000 square feet. Separate submeters shall be installed as follows:

1. For each individual leased, rented or other tenant space within the building projected to consume more than 100 gal/day (380 L/day), including, but not limited to, spaces used for laundry or cleaners, restaurant or food service, medical or dental office, laboratory, or beauty salon or barber shop.
2. Where separate submeters for individual building tenants are unfeasible, for water supplied to the following subsystems:
   a. Makeup water for cooling towers where flow through is greater than 500 gpm (30 L/s).
   b. Makeup water for evaporative coolers greater than 6 gpm (0.04 L/s).
   c. Steam and hot water boilers with energy input more than 500,000 Btu/h (147 kW).

5.303.1.2 Excess consumption. A separate submeter or metering device shall be provided for any tenant within a new building or within an addition that is projected to consume more than 1,000 gal/day.

5.303.3 WATER CONSERVING PLUMBING FIXTURES AND FITTINGS. Plumbing fixtures (water closets and urinals) and fittings (faucets and showerheads) shall comply with the following:

5.303.3.1 Water Closets. The effective flush volume of all water closets shall not exceed 1.28 gallons per flush. Tank-type water closets shall be certified to the performance criteria of the U.S. EPA WaterSense Specification for Tank-Type toilets.

Note: The effective flush volume of dual flush toilets is defined as the composite, average flush volume of two reduced flushes and one full flush.

5.303.3.2 Urinals.
5.303.3.2.1 Wall-mounted Urinals. The effective flush volume of wall-mounted urinals shall not exceed 0.125 gallons per flush.

5.303.3.2.2 Floor-mounted Urinals. The effective flush volume of floor-mounted or other urinals shall not exceed 0.5 gallons per flush.

5.303.3.3 Showerheads. [BSC-CG]
5.303.3.3.1 Single showerhead. Showerheads shall have a maximum flow rate of not more than 1.8 gallons per minute at 80 psi. Showerheads shall be certified to the performance criteria of the U.S. EPA WaterSense Specification for Showerheads.

5.303.3.3.2 Multiple showerheads serving one shower. When a shower is served by more than one showerhead, the combined flow rate of all the showerheads and/or other shower outlets controlled by a single valve shall not exceed 1.8 gallons per minute at 80 psi, or the shower shall be designed to allow only one shower outlet to be in operation at a time.
Note: A hand-held shower shall be considered a showerhead.

5.303.3.4 Faucets and fountains.
5.303.3.4.1 Nonresidential Lavatory faucets. Lavatory faucets shall have a maximum flow rate of not more than 0.5 gallons per minute at 60 psi.

5.303.3.4.2 Kitchen faucets. Kitchen faucets shall have a maximum flow rate of not more than 1.8 gallons per minute at 60 psi. Kitchen faucets may temporarily increase the flow above the maximum rate, but not to exceed 2.2 gallons per minute at 60 psi, and must default to a maximum flow rate of 1.8 gallons per minute at 60 psi.

5.303.3.4.3 Wash fountains. Wash fountains shall have a maximum flow rate of not more than1.8 gallons per minute/20 [rim space (inches) at 60 psi].

5.303.3.4.4 Metering faucets. Metering faucets shall not deliver more than 0.20 gallons per cycle.

5.303.3.4.5 Metering faucets for wash fountains. Metering faucets for wash fountains shall have a maximum flow rate of not more than 0.20 gallons per minute/20 [rim space (inches) at 60 psi].

Note: Where complying faucets are unavailable, aerators or other means may be used to achieve reduction.

5.303.3.4.6 Pre-rinse spray value
When installed, commercial pre-rinse spray valves shall meet the requirements in the California Plumbing Code, Section 420.3.

5.303.4 COMMERCIAL KITCHEN EQUIPMENT.

5.303.4.1 Food Waste Disposers. Disposers shall either modulate the use of water to no more than 1 gpm when the disposer is not in use (not actively grinding food waste/no-load) or shall automatically shut off after no more than 10 minutes of inactivity. Disposers shall use no more than 8 gpm of water.
Note: This code section does not affect local jurisdiction authority to prohibit or require disposer installation.

5.303.5 AREAS OF ADDITION OR ALTERATION. For those occupancies within the authority of the California Building Standards Commission as specified in Section 103, the provisions of Section 5.303.3 and 5.303.4 shall apply to new fixtures in additions or areas of alteration to the building.

5.303.6 STANDARDS FOR PLUMBING FIXTURES AND FITTINGS. Plumbing fixtures and fittings shall be installed in accordance with the *California Plumbing Code*, and shall meet the applicable standards referenced in Table 1701.1 of the *California Plumbing Code* and in Chapter 6 of this code.

SECTION 5.304 OUTDOOR WATER USE

5.304.1 OUTDOOR POTABLE WATER USE IN LANDSCAPE AREAS. Nonresidential developments shall comply with a local water efficient landscape ordinance or the current California Department of Water Resources' Model Water Efficient Landscape Ordinance (MWELO), whichever is more stringent.

Notes:
1. The Model Water Efficient Landscape Ordinance (MWELO) is located in the California Code of Regulations, Title 23, Chapter 2.7, Division 2.
2. MWELO and supporting documents, including a water budget calculator, are available at: https://www.water.ca.gov/.

5.304.6 OUTDOOR POTABLE WATER USE IN LANDSCAPE AREAS. For public schools and community colleges, landscape projects as described in Sections 5.304.6.1 and 5.304.6.2 shall comply with the California Department of Water Resources Model Water Efficient Landscape Ordinance (MWELO) commencing with Section 490 of Chapter 2.7, Division 2, Title 23, *California Code of Regulations*, except that the evapotranspiration adjustment factor (ETAF) shall be 0.65 with an additional water allowance for special landscape areas (SLA) of 0.35.

Exception: Any project with an aggregate landscape area of 2,500 square feet or less may comply with the prescriptive measures contained in Appendix D of the MWELO.

5.304.6.1 Newly constructed landscapes. New construction projects with an aggregate landscape area equal to or greater than 500 square feet.

5.304.6.2 Rehabilitated landscapes. Rehabilitated landscape projects with an aggregate landscape area equal to or greater than 1,200 square feet.

DIVISION 5.4 MATERIAL CONSERVATION AND RESOURCE EFFICIENCY

SECTION 5.401 GENERAL

5.401.1 SCOPE. The provisions of this chapter specify the requirements of achieving material conservation, resource efficiency, and greenhouse gas (GHG) emission reduction through protection of buildings from exterior moisture, construction waste diversion, employment of techniques to reduce pollution through recycling of materials, the installation of products with lower GHG emissions and building commissioning or testing and adjusting.

SECTION 5.402 DEFINITIONS

5.402.1 DEFINITIONS. The following terms are defined in Chapter 2 *(and are included here for reference)*

ADJUST. To regulate fluid flow rate and air patterns at the terminal equipment, such as to reduce fan speed or adjust a damper.

BALANCE. To proportion flows within the distribution system, including sub-mains, branches and terminals, according to design quantities.

BUILDING COMMISSIONING. A systematic quality assurance process that spans the entire design and construction process, including verifying and documenting that building systems and components are planned, designed, installed, tested, operated and maintained to meet the owner's project requirements.

BUY CLEAN CALIFORNIA ACT (BCCA). The Buy Clean California Act (BCCA) (Public Contract Code Sections 3500-3505) targets carbon emissions associated with the production of structural steel (hot-rolled sections, hollow structural sections, and plate), concrete reinforcing steel, flat glass, and mineral wool board insulation. The maximum acceptable global warming potential (GWP) limits are established by the Department of General Services (DGS), in consultation with the California Air Resources Board (CARB).

CRADLE-TO-GRAVE. Activities associated with a product or building's life cycle from the extraction stage through disposal stage, and covering modules A1 through C4 in accordance with ISO Standards 14025 and 21930.

ORGANIC WASTE. Food waste, green waste, landscape and pruning wste, nonhazardous wood waste, and food soiled paper waste that is mixed in with food waste.

REFERENCE STUDY PERIOD. The period of use for the building, in years, that will be assumed for life cycle assessment.

TEST. A procedure to determine quantitative performance of a system or equipment

TYPE III ENVIRONMENTAL PRODUCT DECLARATION (EPD). A third-party verified report that summarizes how a product impacts the environment. Type III EPDs can be either product-specific, factory-specific, or industry-wide EPDs. See "Cradle-to-Gate."

FACTORY-SPECIFIC EPD. A product-specific Type III EPD in which the environmental impacts can be attributed to a single manufacturer and manufacturing facility.

INDUSTRY-WIDE EPD (IW-EPD). A Type III EPD in which the environmental impacts are an average of the typical manufacturing impacts for a range of products within the same product category for a group of manufacturers.

PRODUCT-SPECIFIC EPD. A Type III EPD in which the environmental impacts can be attributed to a product design and manufacturer across multiple facilities.

SECTION 5.407 WATER RESISTANCE AND MOISTURE MANAGEMENT

5.407.1 WEATHER PROTECTION. Provide a weather-resistant exterior wall and foundation envelope as required by California Building Code Section 1402.2 (Weather Protection), manufacturer's installation instructions or local ordinance, whichever is more stringent.

5.407.2 MOISTURE CONTROL. Employ moisture control measures by the following methods.

5.407.2.1 Sprinklers. Design and maintain landscape irrigation systems to prevent spray on structures.

5.407.2.2 Entries and openings. Design exterior entries and/or openings subject to foot traffic or wind-driven rain to prevent water intrusion into buildings as follows:

5.407.2.2.1 Exterior door protection. Primary exterior entries shall be covered to prevent water intrusion by using nonabsorbent floor and wall finishes within at least 2 feet around and perpendicular to such openings plus at least one of the following:

1. An installed awning at least 4 feet in depth.
2. The door is protected by a roof overhang at least 4 feet in depth.
3. The door is recessed at least 4 feet.
4. Other methods which provide equivalent protection.

5.407.2.2.2 Flashing. Install flashings integrated with a drainage plane.

SECTION 5.408 CONSTRUCTION WASTE REDUCTION, DISPOSAL AND RECYCLING

5.408.1 CONSTRUCTION WASTE MANAGEMENT. Recycle and/or salvage for reuse a minimum of 65% of the non-hazardous construction and demolition waste in accordance with Section 5.408.1.1, 5.408.1.2 or 5.408.1.3; or meet a local construction and demolition waste management ordinance, whichever is more stringent.

5.408.1.1 Construction waste management plan. Where a local jurisdiction does not have a construction and demolition waste management ordinance, submit a construction waste management plan that:

1. Identifies the construction and demolition waste materials to be diverted from disposal by efficient usage, recycling, reuse on the project or salvage for future use or sale.
2. Determines if construction and demolition waste materials will be sorted on-site (source-separated) or bulk mixed (single stream).
3. Identifies diversion facilities where construction and demolition waste material collected will be taken.
4. Specifies that the amount of construction and demolition waste materials diverted shall be calculated by weight or volume, but not by both.

5.408.1.2 Waste Management Company. Utilize a waste management company that can provide verifiable documentation that the percentage of construction and demolition waste material diverted from the landfill complies with this section.

Note: The owner or contractor shall make the determination if the construction and demolition waste material will be diverted by a waste management company.

Exceptions to Sections 5.408.1.1 and 5.408.1.2:

1. Excavated soil and land-clearing debris.
2. Alternate waste reduction methods developed by working with local agencies if diversion or recycle facilities capable of compliance with this item do not exist.
3. Demolition waste meeting local ordinance or calculated in consideration of local recycling facilities and markets.

5.408.1.3 Waste stream reduction alternative. The combined weight of new construction disposal that does not exceed two pounds per square foot of building area may be deemed to meet the 65% minimum requirement as approved by the enforcing agency.

5.408.1.4 Documentation. Documentation shall be provided to the enforcing agency which demonstrates compliance with Sections 5.408.1.1, through 5.408.1.3. The waste management plan shall be updated as necessary and shall be accessible during construction for examination by the enforcing agency.

Notes:
1. Sample forms found in "A Guide to the California Green Building Standards Code (Nonresidential)" located www.dgs.ca.gov/BSC/Resources/Page-Content/Building-Standards-Commission-Resources-List-Folder/CALGreen may be used to assist in documenting compliance with the waste management plan.
2. Mixed construction and demolition debris processors can be located at the California Department of Resources Recycling and Recovery (CalRecycle).

5.408.2 UNIVERSAL WASTE. [A] Additions and alterations to a building or tenant space that meet the scoping provisions in Section 301.3 for nonresidential additions and alterations, shall require verification that Universal Waste items such as fluorescent lamps and ballast and mercury containing thermostats as well as other California prohibited Universal Waste materials are disposed of properly and are diverted from landfills. A list of prohibited Universal Waste materials shall be included in the construction documents.

Note: Refer to the Universal Waste Rule link at: http://www.dtsc.ca.gov/universalwaste/

DISCLAIMER:*THIS DOCUMENT IS PROVIDED AND INTENDED TO BE USED AS A MEANS TO INDICATE AREAS OF COMPLIANCE WITH THE CALIFORNIA GREEN BUILDING STANDARDS (CALGREEN) CODE. DUE TO THE VARIABLES BETWEEN BUILDING DEPARTMENT JURISDICTIONS, THIS CHECKLIST IS TO BE USED ON AN INDIVIDUAL PROJECT BASIS AND MAY BE MODIFIED BY THE END USER TO MEET THOSE INDIVIDUAL NEEDS. THE END USER ASSUMES ALL RESPONSIBILITY ASSOCIATED WITH THE USE OF THIS DOCUMENT, INCLUDING VERIFICATION WITH THE FULL CODE.*

PBK
FRESNO, CA
559-448-8400
www.pbk.com

PARLIER HS STADIUM REPLACEMENT
603 3rd Street
Parlier, CA 93648
CLIENT PROJECT NO: 250093
DSA SUBMISSION 02 DSA FILE NO. : 10-H12
DSA APPL. NO. : 02-124002

PARLIER UNIFIED SCHOOL DISTRICT

LICENSED ARCHITECT
MICHELE GARGANO
No. C-32550
RENEWAL DATE
MAR 31, 2027
STATE OF CALIFORNIA

CLIENT	
PARLIER UNIFIED SCHOOL DISTRICT	
DATE	PROJECT NUMBER
2026/02/09	250093

DRAWING HISTORY

No.	Description	Date

CHECKED BY: Checker
DRAWN BY: Author

CALGREEN CHECKLIST (2 OF 4)

CA4.2

Plot Stamp:
6/23/2026 9:35:13 AM

CALGREEN CHECKLIST (3 OF 4)
CA4.3
FOR BLUEBEAM LABELING/OCR:

2025 CALIFORNIA GREEN BUILDING STANDARDS CODE
NONRESIDENTIAL MANDATORY MEASURES, SHEET 3

Y = YES
N/A = NOT APPLICABLE
RESPON. PARTY = RESPONSIBLE PARTY (ie: ARCHITECT, ENGINEER, OWNER, CONTRACTOR, INSPECTOR ETC.)

Y	N/A	RESPON. PARTY
☒	☐	

5.408.3 EXCAVATED SOIL AND LAND CLEARING DEBRIS. 100 percent of trees, stumps, rocks and associated vegetation and soils resulting primarily from land clearing shall be reused or recycled. For a phased project, such material may be stockpiled on site until the storage site is developed.

Exception: Reuse, either on or off-site, of vegetation or soil contaminated by disease or pest infestation.

Notes:
1. If contamination by disease or pest infestation is suspected, contact the County Agricultural Commissioner and follow its direction for recycling or disposal of the material.
2. For a map of know pest and/or disease quarantine zones, consult with the California Department of Food and Agriculture. (www.cdfa.ca.gov)

SECTION 5.409 LIFE CYCLE ASSESSMENT

5.409.1 SCOPE. [BSC-CG] Effective July 1, 2024, projects consisting of newly constructed building(s) with a combined floor area of 100,000 square feet or greater shall comply with either Section 5.409.2 or Section 5.409.3. Alteration(s) to existing building(s) where the combined altered floor area is 100,000 square feet or greater shall comply with either Section 5.105.2, 5.409.2, or 5.409.3. Addition(s) to existing building(s) where the total floor area combined with the existing building(s) is 100,000 square feet or greater shall comply with either Section 5.105.2, Section 5.409.2, or Section 5.409.3. Effective January 1, 2026, the combined floor area shall be 50,000 square feet or greater.

[DSA-SS] Projects consisting of newly constructed building(s) with a combined floor area of 50,000 square feet or greater shall comply with either Section 5.409.2 or Section 5.409.3. Alteration(s) to existing building(s) where the combined altered floor area is 50,000 square feet or greater shall comply with either Section 5.105.2, 5.409.2, or 5.409.3. Addition(s) to existing building(s) where the total floor area combined with the existing building(s) is 50,000 square feet or greater shall comply with either Section 5.105.2, Section 5.409.2, or Section 5.409.3.

Y	N/A	RESPON. PARTY
☐	☒	

5.409.2 Whole building life cycle assessment. Projects shall conduct a cradle-to-grave whole building life cycle assessment performed in accordance with ISO 14040 and ISO 14044, excluding operating energy, and demonstrating a minimum 10-percent reduction in global warming potential (GWP) as compared to a reference baseline building of similar size, function, complexity, type of construction, material specification, and location that meets the requirements of the California Energy Code currently in effect. Software used to conduct the whole building life cycle assessment, including reference baseline building, shall have a data set compliant with ISO 14044, and ISO 21930 or EN 15804, and the software shall conform to ISO 21931 and/or EN 15978. The software tools and data sets shall be the same for evaluation of both the baseline building and the proposed building.

Notes:
1. Software for calculating whole building life cycle assessment is available for free at Athena Sustainable Materials Institute (https://calculatelca.com/software/impact-estimator/) and OneClick LCA-Planetary (www.oneclicklca.com/planetary). Paid versions include, but are not limited to, Sphera GaBi Solutions (gabi.sphera.com), SimaPro (simapro.com), One-Click LCA (www.oneclicklca.com) and Tally for Revit (apps.autodesk.com).

2. ASTM E2921-22 "Standard Practice for Minimum Criteria for Comparing Whole Building Life Cycle Assessments for Use with Building Codes, Standards, and Rating Systems" may be consulted for the assessment.

3. In addition to the required documentation specified in Section 5.409.2.3, Worksheet WS-9 may be required by the enforcing entity to demonstrate compliance with the requirements.

5.409.2.1 Building components. Building enclosure components included in the assessment shall be limited to glazing assemblies, insulation, and exterior finishes. Primary and secondary structural members included in the assessment shall be limited to footings and foundations, and structural columns, beams, walls, roofs, and floors.

5.409.2.2 Reference study period. The reference study period of the proposed building shall be equal to the reference baseline building and shall be 60 years.

5.409.2.3 Verification of compliance. A summary of the GWP analysis produced by the software and Worksheet WS-4 signed by the design professional of record shall be provided in the construction documents as documentation of compliance. A copy of the whole building life cycle assessment which includes the GWP analysis produced by the software, in addition to maintenance and training information, shall be included in the operation and maintenance manual and shall be provided to the owner at the close of construction. The enforcing agency may require inspection and inspection reports in accordance with Sections 702.2 and 703.1 during and at completion of construction to demonstrate substantial conformance. Inspection shall be performed by the design professional of record or third party acceptable to the enforcing agency.

Y	N/A	RESPON. PARTY
☐	☒	

5.409.3 Product GWP compliance—prescriptive path. Each product that is permanently installed and listed in Table 5.409.3 shall have a Type III environmental product declaration (EPD), either product-specific or factory-specific.

TABLE 5.409.3
PRODUCT GWP LIMITS

BUY CLEAN CALIFORNIA MATERIALS PRODUCT CATEGORY[1]	MAXIMUM ACCEPTABLE GWP VALUE (unfabricated) ($GWP_{allowed}$)	UNIT OF MEASUREMENT
Hot-rolled structural steel sections	1.77	MT CO_2e/MT
Hollow structural sections	3.00	MT CO_2e/MT
Steel plate	2.61	MT CO_2e/MT
Concrete reinforcing steel	1.56	MT CO_2e/MT
Flat glass	2.50	kg CO_2e/MT
Light-density mineral wool board insulation	5.83	kg CO_2e/MT
Heavy-density mineral wool board insulation	14.28	kg CO_2e/MT
Concrete, Ready-Mixed[2, 3]		
CONCRETE PRODUCT CATEGORY	**MAXIMUM GWP ALLOWED VALUE ($GWP_{allowed}$)**	**UNIT OF MEASUREMENT**
up to 2499 psi	450	kg CO_2e/m^3
2500~3499 psi	489	kg CO_2e/m^3
3500~4499 psi	566	kg CO_2e/m^3
4500~5499 psi	661	kg CO_2e/m^3
5500~6499 psi	701	kg CO_2e/m^3
6500 psi and greater	799	kg CO_2e/m^3
Concrete, Lightweight Ready-Mixed[2]		
CONCRETE PRODUCT CATEGORY	**MAXIMUM GWP ALLOWED VALUE ($GWP_{allowed}$)**	**UNIT OF MEASUREMENT**
up to 2499 psi	875	kg CO_2e/m^3
2500~3499 psi	956	kg CO_2e/m^3
3500~4499 psi	1039	kg CO_2e/m^3

1. The GWP values of the products listed in Table 5.409.3 are based on 175 percent of Buy Clean California Act (BCCA) GWP values, except for concrete products which are not included in the BCCA.
2. For concrete, 175 percent of the National Ready Mixed Concrete Association (NRMCA) 2022 version 3 Pacific Southwest regional benchmark values are used for the GWP allowed, except for High Early Strength.
3. Concrete High Early Strength ready-mixed shall be calculated at 130 percent of the ready-mixed concrete GWP allowed values for each product category.

Y	N/A	RESPON. PARTY
☐	☒	

5.409.3.1 Products shall not exceed the maximum GWP value specified in Table 5.409.3.

Exception: Concrete may be considered one product category to meet compliance with this section. A weighted average of the maximum GWP for all concrete mixes installed in the project shall be less than the weighted average maximum GWP allowed per Table 5.409.3 using Exception Equation 5.409.3.1. Calculations shall be performed with consistent units of measurement for the material quantity and the GWP value.

For the purposes of this exception, industry-wide EPDs are acceptable.

Exception EQUATION 5.409.3.1

$GWP_n < GWP_{allowed}$
where
$GWP_n = \Sigma\ (GWP_n)(V_m)$
and
$GWP_{allowed} = \Sigma\ (GWP_{allowed})(V_m)$
and
$_n$ = each concrete mix installed in the project
GWP_n = the GWP for concrete mix $_n$ per concrete mix EPD, in kg CO2e/m3
$GWP_{allowed}$ = the GWP potential allowed for concrete mix $_n$ per Table 5.409.3
V_m = the volume of concrete mix $_n$ installed in the project, in m3

Y	N/A	RESPON. PARTY
☐	☒	

5.409.3.2 Verification of compliance. Calculations to demonstrate compliance, Type III EPDs for products required to comply, if included in the project, and Worksheet WS-5 signed by the design professional of record shall be provided on the construction documents. Updated EPDs for products used in construction shall be provided to the owner at the close of construction and to the enforcement entity upon request. The enforcing agency may require inspection and inspection reports in accordance with Sections 702.2 and 703.1 during and at completion of construction to demonstrate substantial conformance. Inspection shall be performed by the design professional of record or third party acceptable to the enforcing agency.

SECTION 5.410 BUILDING MAINTENANCE AND OPERATIONS

Y	N/A	RESPON. PARTY
☒	☐	

5.410.1 RECYCLING BY OCCUPANTS. Provide readily accessible areas that serve the entire building and are identified for the depositing, storage and collection of non-hazardous materials for recycling, including (at a minimum) paper, corrugated cardboard, glass, plastics, organic waste, and metals or meet a lawfully enacted local recycling ordinance, if more restrictive.

Exception: Rural jurisdictions that meet and apply for the exemption in Public Resources Code section 49.82 (a)(2)(A) et seq. shall also be exempt from the organic waste portion of this section.

5.410.1.1 Additions. All additions conducted within a 12-month period under single or multiple permits, resulting in an increase of 30% or more in floor area, shall provide recycling areas on site.

Exception: Additions within a tenant space resulting in less than a 30% increase in the tenant space floor area.

5.410.1.2 Sample ordinance. Space allocation for recycling areas shall comply with Chapter 18, Part 3, Division 30 of the *Public Resources Code*. Chapter 18 is known as the California Solid Waste Reuse and Recycling Access Act of 1991 (Act).

Note: A sample ordinance for use by local agencies may be found in Appendix A of the document at the CalRecycle's web site.

Y	N/A	RESPON. PARTY
☐	☒	

5.410.2 COMMISSIONING. [N] New buildings 10,000 square feet and over. For new buildings 10,000 square feet and over, building commissioning shall be included in the design and construction processes of the building project to verify that the building systems and components meet the owner's or owner representative's project requirements. Commissioning shall be performed in accordance with this section by trained personnel with experience on projects of comparable size and complexity. For I-occupancies that are not regulated by OSHPD or for I-occupancies and L-occupancies that are not regulated y the California Energy Code Section 100.0 Scope, all requirements in Sections 5.410.2 through 5.410.2.6 shall apply.

Note: For energy-related systems under the scope (Section 100) of the California Energy Code, including heating, ventilation, air conditioning (HVAC) systems and controls, indoor lighting systems and controls, as well as water heating systems and controls, refer to California Energy Code Section 120.8 for commissioning requirements

Commissioning requirements shall include:

1. Owner's or Owner representative's project requirements.
2. Basis of Design.
3. Commissioning measures shown in the construction documents.
4. Commissioning plan.
5. Functional performance testing.
6. Documentation and training.
7. Commissioning report.

Exceptions:

1. Unconditioned warehouses of any size.
2. Areas less than 10,000 square feet used for offices or other conditioned accessory spaces within unconditioned warehouses.
3. Tenant improvements less than 10,000 square feet as described in Section 303.1.1.
4. Open parking garages of any size, or open parking garage areas, of any size, within a structure.

Note: For the purposes of this section, unconditioned shall mean a building, area or room which does not provide heating and/or air conditioning.

Informational Notes:

1. . Functional performance testing for heating, ventilation, air conditioning systems and lighting controls must be performed in compliance with the *California Energy Code*.

5.410.2.1 Owner's or Owner Representative's Project Requirements (OPR). [N] The expectations and requirements of the building appropriate to its phase shall be documented before the design phase of the project begins. This documentation shall include the following:
1. Environmental and sustainability goals.
2. Building sustainable goals.
3. Indoor environmental quality requirements.
4. Project program, including facility functions and hours of operation, and need for after hours operation.
5. Equipment and systems expectations.
6. Building occupant and operation and maintenance (O&M) personnel expectations.

5.410.2.2 Basis of Design (BOD). [N] A written explanation of how the design of the building systems meets the OPR shall be completed at the design phase of the building project. The Basis of Design document shall cover the following systems:

1. Renewable energy systems.
2. Landscape irrigation systems.
3. Water reuse system.

5.410.2.3 Commissioning plan. [N] Prior to permit issuance a commissioning plan shall be completed to document how the project will be commissioned. The commissioning plan shall include the following:
1. General project information.
2. Commissioning goals.
3. Systems to be commissioned. Plans to test systems and components shall include:
   a. An explanation of the original design intent.
   b. Equipment and systems to be tested, including the extent of tests.
   c. Functions to be tested.
   d. Conditions under which the test shall be performed.
   e. Measurable criteria for acceptable performance.
4. Commissioning team information.
5. Commissioning process activities, schedules and responsibilities. Plans for the completion of commissioning shall be included.

5.410.2.4 Functional performance testing. [N] Functional performance tests shall demonstrate the correct installation and operation of each component, system and system-to-system interface in accordance with the approved plans and specifications. Functional performance testing reports shall contain information addressing each of the building components tested, the testing methods utilized, and include any readings and adjustments made.

5.410.2.5 Documentation and training. [N] A Systems Manual and Systems Operations Training are required, including Occupational Safety and Health Act (OSHA) requirements in *California Code of Regulations* (CCR), Title 8, Section 5142, and other related regulations.

5.410.2.5.1 Systems manual. [N] Documentation of the operational aspects of the building shall be completed within the systems manual and delivered to the building owner or representative. The systems manual shall include the following:
1. Site information, including facility description, history and current requirements.
2. Site contact information.
3. Basic operations and maintenance, including general site operating procedures, basic troubleshooting, recommended maintenance requirements, site events log.
4. Major systems.
5. Site equipment inventory and maintenance notes.
6. A copy of verifications required by the enforcing agency or this code.
7. Other resources and documentation, if applicable.

Y	N/A	RESPON. PARTY

Y	N/A	RESPON. PARTY
☐	☒	

5.410.2.5.2 Systems operations training. [N] A program for training of the appropriate maintenance staff for each equipment type and/or system shall be developed and documented in the commissioning report and shall include the following:
1. System/equipment overview (what it is, what it does and with what other systems and/or equipment it interfaces).
2. Review and demonstration of servicing/preventive maintenance.
3. Review of the information in the Systems Manual.
4. Review of the record drawings on the system/equipment.

5.410.2.6 Commissioning report. [N] A report of commissioning process activities undertaken through the design and construction phases of the building project shall be completed and provided to the owner or representative.

Y	N/A	RESPON. PARTY
☐	☒	

5.410.4 TESTING AND ADJUSTING. New buildings less than 10,000 square feet. Testing and adjusting of systems shall be required for new buildings less than 10,000 square feet or new systems to serve an addition or alteration subject to Section 303.1.

5.410.4.2 (Reserved)

Note: For energy-related systems under the scope (Section 100) of the California Energy Code, including heating, ventilation, air conditioning (HVAC) systems and controls, indoor lighting system and controls, as well as water heating systems and controls, refer to California Energy Code Section 120.8 for commissioning requirements and Sections 120.5, 120.6, 130.4, and 140.9(b)3 for additional testing requirements of specific systems.

5.410.4.2 Systems. Develop a written plan of procedures for testing and adjusting systems. Systems to be included for testing and adjusting shall include at a minimum, as applicable to the project:

1. Renewable energy systems.
2. Landscape irrigation systems.
3. Water reuse systems.

5.410.4.3 Procedures. Perform testing and adjusting procedures in accordance with manufacturer's specifications and applicable standards on each system.

5.410.4.3.1 HVAC balancing. In addition to testing and adjusting, before a new space-conditioning system serving a building or space is operated for normal use, the system shall be balanced in accordance with the procedures defined by the Testing Adjusting and Balancing Bureau National Standards; the National Environmental Balancing Bureau Procedural Standards; Associated Air Balance Council National Standards or as approved by the enforcing agency.

5.410.4.4 Reporting. After completion of testing, adjusting and balancing, provide a final report of testing signed by the individual responsible for performing these services.

5.410.4.5 Operation and maintenance (O & M) manual. Provide the building owner or representative with detailed operating and maintenance instructions and copies of guaranties/warranties for each system. O & M instructions shall be consistent with OSHA requirements in CCR, Title 8, Section 5142, and other related regulations.

5.410.4.5.1 Inspections and reports. Include a copy of all inspection verifications and reports required by the enforcing agency.

DIVISION 5.5 ENVIRONMENTAL QUALITY

SECTION 5.501 GENERAL

5.501.1 SCOPE. The provisions of this chapter shall outline means of reducing the quantity of air contaminants that are odorous, irritating, and/or harmful to the comfort and well-being of a building's installers, occupants and neighbors.

SECTION 5.502 DEFINITIONS

5.502.1 DEFINITIONS. The following terms are defined in Chapter 2 *(and are included here for reference)*

ARTERIAL HIGHWAY. A general term denoting a highway primarily for through traffic usually on a continuous route.

A-WEIGHTED SOUND LEVEL (dBA). The sound pressure level in decibels as measured on a sound level meter using the internationally standardized A-weighting filter or as computed from sound spectral data to which A-weighting adjustments have been made.

1 BTU/HOUR. British thermal units per hour, also referred to as Btu. The amount of heat required to raise one pound of water one degree Fahrenheit per hour, a common measure of heat transfer rate. A ton of refrigeration is 12,000 Btu, the amount of heat required to melt a ton (2,000 pounds) of ice at 32^{0} Fahrenheit.

COMMUNITY NOISE EQUIVALENT LEVEL (CNEL). A metric similar to the day-night average sound level (Ldn), except that a 5 decibel adjustment is added to the equivalent continuous sound exposure level for evening hours (7pm to 10pm) in addition to the 10 dB nighttime adjustment used in the Ldn.

COMPOSITE WOOD PRODUCTS. Composite wood products include hardwood plywood, particleboard and medium density fiberboard. "Composite wood products" does not include hardboard, structural plywood, structural panels, structural composite lumber, oriented strand board, glued laminated timber, timber, prefabricated wood I–joists or finger–jointed lumber, all as specified in California Code of Regulations (CCR), Title 17, Section 93120.1(a).

Note: See CCR, Title 17, Section 93120.1.

DAY-NIGHT AVERAGE SOUND LEVEL (Ldn). The A-weighted equivalent continuous sound exposure level for a 24-hour period with a 10 dB adjustment added to sound levels occurring during nighttime hours (10p.m. to 7 a.m.).

DECIBEL (db). A measure on a logarithmic scale of the magnitude of a particular quantity (such as sound pressure, sound power, sound intensity) with respect to a reference quantity.

EXPRESSWAY. An arterial highway for through traffic which may have partial control of access, but which may or may not be divided or have grade separations at intersections.

FREEWAY. A divided arterial highway with full control of access and with grade separations at intersections.

GLOBAL WARMING POTENTIAL (GWP). The radiative forcing impact of one mass-based unit of a given greenhouse gas relative to an equivalent unit of carbon dioxide over a given period of time. Carbon dioxide is the reference compound with a GWP of one.

GLOBAL WARMING POTENTIAL VALUE (GWP VALUE). A 100-year GWP value published by the Intergovernmental Panel on Climate Change (IPCC) in either its Second Assessment Report (SAR) (IPCC, 1995); or its Fourth Assessment A-3 Report (AR4) (IPCC, 2007). The SAR GWP values are found in column "SAR (100-yr)" of Table 2.14.; the AR4 GWP values are found in column "100 yr" of Table 2.14.

HIGH-GWP REFRIGERANT. A compound used as a heat transfer fluid or gas that is: (a) a chlorofluorocarbon, a hdrochlorofluorocarbon, a hydrofluorocarbon, a perfluorocarbon, or any compound or blend of compounds, with a GWP value equal to or greater than 150, or (B) any ozone depleting substance as defined in Title 40 of the Code of Federal Regulations, Part 82, sec.82.3 (as amended March 10, 2009).

LONG RADIUS ELBOW. Pipe fitting installed between two lengths of pipe or tubing to allow a change of direction, with a radius 1.5 times the pipe diameter.

LOW-GWP REFRIGERANT. A compound used as a heat transfer fluid or gas that: (A) has a GWP value less than 150, and (B) is not an ozone depleting substance as defined in Title 40 of the Code of Federal Regulations, Part 82, sec.82.3 (as amended March 10, 2009).

MERV. Filter minimum efficiency reporting value, based on ASHRAE 52.2–1999.

MAXIMUM INCREMENTAL REACTIVITY (MIR). The maximum change in weight of ozone formed by adding a compound to the "Base REactive Organic Gas (ROG) Mixture" per weight of compound added, expressed to hundreths of a gram (g O^3/g ROC).

PRODUCT-WEIGHTED MIR (PWMIR). The sum of all weighted-MIR for all ingredients in a product subject to this article. The PWMIR is the total product reactivity expressed to hundredths of a gram of ozone formed per gram of product (excluding container and packaging).

PSIG. Pounds per square inch, guage.

REACTIVE ORGANIC COMPOUND (ROC). Any compound that has the potential, once emitted, to contribute to ozone formation in the troposphere.

SCHRADER ACCESS VALVES. Access fittings with a valve core installed.

SHORT RADIUS ELBOW. Pipe fitting installed between two lengths of pipe or tubing to allow a change of direction, with a radius 1.0 times the pipe diameter.

SUPERMARKET. For the purposes of Section 5.508.2, a supermarket is any retail food facility with 8,000 square feet or more conditioned area, and that utilizes either refrigerated display cases, or walk-in coolers or freezers connected to remote compressor units or condensing units.

VOC. A volatile organic compound broadly defined as a chemical compound based on carbon chains or rings with vapor pressures greater than 0.1 millimeters of mercury at room temperature. These compounds typically contain hydrogen and may contain oxygen, nitrogen and other elements. See CCR Title 17, Section 94508(a).

Note: Where specific regulations are cited from different agencies such as SCAQMD, ARB, etc., the VOC definition included in that specific regulation is the one that prevails for the specific measure in question.

Y	N/A	RESPON. PARTY
☐	☒	

Y	N/A	RESPON. PARTY
☒	☐	

Y	N/A	RESPON. PARTY
☒	☐	

Y	N/A	RESPON. PARTY
☒	☐	

SECTION 5.503 FIREPLACES

5.503.1 FIREPLACES. Install only a direct-vent sealed-combustion gas or sealed wood-burning fireplace, or a sealed woodstove or pellet stove, and refer to residential requirements in the California Energy Code, Title 24, Part 6, Subchapter 7, Section 150. Woodstoves, pellet stoves and fireplaces shall comply with applicable local ordinances.

5.503.1.1 Woodstoves. Woodstoves and pellet stoves shall comply with U.S. EPA New Source Performance Standards (NSPS) emission limits as applicable, and shall have a permanent label indicating they are certified to meet the emission limits.

SECTION 5.504 POLLUTANT CONTROL

5.504.1 TEMPORARY VENTILATION. The permanent HVAC system shall only be used during construction if necessary to condition the building or areas of addition or alteration within the required temperature range for material and equipment installation. If the HVAC system is used during construction, use return air filters with a Minimum Efficiency Reporting Value (MERV) of 8, based on ASHRAE 52.2-1999, or an average efficiency of 30% based on ASHRAE 52.1-1992 Replace all filters immediately prior to occupancy, or, if the building is occupied during alteration, at the conclusion of construction.

5.504.3 Covering of duct openings and protection of mechanical equipment during construction. At the time of rough installation and during storage on the construction site until final startup of the heating, cooling and ventilation equipment, all duct and other related air distribution component openings shall be covered with tape, plastic, sheetmetal or other methods acceptable to the enforcing agency to reduce the amount of dust, water and debris which may enter the system.

5.504.4 FINISH MATERIAL POLLUTANT CONTROL. Finish materials shall comply with Sections 5.504.4.1 through 5.504.4.6.

5.504.4.1 Adhesives, sealants and caulks. Adhesives, sealants, and caulks used on the project shall meet the requirements of the following standards:
1. Adhesives, adhesive bonding primers, adhesive primers, sealants, sealant primers and caulks shall comply with local or regional air pollution control or air quality management district rules where applicable, or SCAQMD Rule 1168 VOC limits, as shown in Tables 5.504.4.1 and 5.504.4.2. Such products also shall comply with the Rule 1168 prohibition on the use of certain toxic compounds (chloroform, ethylene dichloride, methylene chloride, perchloroethylene and trichloroethylene), except for aerosol products as specified in subsection 2, below.

2. Aerosol adhesives, and smaller unit sizes of adhesives, and sealant or caulking compounds (in units of product, less packaging, which do not weigh more than one pound and do not consist of more than 16 fluid ounces) shall comply with statewide VOC standards and other requirements, including prohibitions on use of certain toxic compounds, of *California Code of Regulations*, Title 17, commencing with Section 94507.

TABLE 5.504.4.1 - ADHESIVE VOC LIMIT[1,2]
Less Water and Less Exempt Compounds in Grams per Liter

ARCHITECTURAL APPLICATIONS	CURRENT VOC LIMIT
INDOOR CARPET ADHESIVES	50
CARPET PAD ADHESIVES	50
OUTDOOR CARPET ADHESIVES	150
WOOD FLOORING ADHESIVES	100
RUBBER FLOOR ADHESIVES	60
SUBFLOOR ADHESIVES	50
CERAMIC TILE ADHESIVES	65
VCT & ASPHALT TILE ADHESIVES	50
DRYWALL & PANEL ADHESIVES	50
COVE BASE ADHESIVES	50
MULTIPURPOSE CONSTRUCTION ADHESIVES	70
STRUCTURAL GLAZING ADHESIVES	100
SINGLE-PLY ROOF MEMBRANE ADHESIVES	250
OTHER ADHESIVES NOT SPECIFICALLY LISTED	50
SPECIALTY APPLICATIONS	
PVC WELDING	510
CPVC WELDING	490
ABS WELDING	325
PLASTIC CEMENT WELDING	250
ADHESIVE PRIMER FOR PLASTIC	550
CONTACT ADHESIVE	80
SPECIAL PURPOSE CONTACT ADHESIVE	250
STRUCTURAL WOOD MEMBER ADHESIVE	140
TOP & TRIM ADHESIVE	250
SUBSTRATE SPECIFIC APPLICATIONS	
METAL TO METAL	30
PLASTIC FOAMS	50
POROUS MATERIAL (EXCEPT WOOD)	50
WOOD	30
FIBERGLASS	80

1. IF AN ADHESIVE IS USED TO BOND DISSIMILAR SUBSTRATES TOGETHER, THE ADHESIVE WITH THE HIGHEST VOC CONTENT SHALL BE ALLOWED.

2. FOR ADDITIONAL INFORMATION REGARDING METHODS TO MEASURE THE VOC CONTENT SPECIFIED IN THIS TABLE, SEE SOUTH COAST AIR QUALITY MANAGEMENT DISTRICT RULE 1168, www.arb.ca.gov/DRDB/SC/CURHTML/R1168.PDF

TABLE 5.504.4.2 - SEALANT VOC LIMIT
Less Water and Less Exempt Compounds in Grams per Liter

SEALANTS	CURRENT VOC LIMIT
ARCHITECTURAL	250
MARINE DECK	760
NONMEMBRANE ROOF	300
ROADWAY	250
SINGLE-PLY ROOF MEMBRANE	450
OTHER	420
SEALANT PRIMERS	
ARCHITECTURAL	
NONPOROUS	250
POROUS	775
MODIFIED BITUMINOUS	500
MARINE DECK	760
OTHER	750

NOTE: FOR ADDITIONAL INFORMATION REGARDING METHODS TO MEASURE THE VOC CONTENT SPECIFIED IN THESE TABLES, SEE SOUTH COAST AIR QUALITY MANAGEMENT DISTRICT RULE 1168.

DISCLAIMER: *THIS DOCUMENT IS PROVIDED AND INTENDED TO BE USED AS A MEANS TO INDICATE AREAS OF COMPLIANCE WITH THE CALIFORNIA GREEN BUILDING STANDARDS (CALGREEN) CODE. DUE TO THE VARIABLES BETWEEN BUILDING DEPARTMENT JURISDICTIONS, THIS CHECKLIST IS TO BE USED ON AN INDIVIDUAL PROJECT BASIS AND MAY BE MODIFIED BY THE END USER TO MEET THOSE INDIVIDUAL NEEDS. THE END USER ASSUMES ALL RESPONSIBILITY ASSOCIATED WITH THE USE OF THIS DOCUMENT, INCLUDING VERIFICATION WITH THE FULL CODE.*

PBK
FRESNO, CA
559-448-8400
www.pbk.com

PARLIER HS STADIUM REPLACEMENT
603 3rd Street
Parlier, CA 93648

CLIENT PROJECT NO: 250093
DSA SUBMISSION
DSA APPL. NO.: 02-124002 DSA FILE NO.: 10-H12

PARLIER UNIFIED SCHOOL DISTRICT

LICENSED ARCHITECT
MICHELE GARGANO
No. C-32550
RENEWAL DATE
MAR 31, 2027
STATE OF CALIFORNIA

CLIENT
PARLIER UNIFIED SCHOOL DISTRICT
DATE 2026/02/09
PROJECT NUMBER 250093
DRAWING HISTORY

No.	Description	Date

CHECKED BY: Checker
DRAWN BY: Author

CALGREEN CHECKLIST (3 OF 4)

CA4.3

Plot Stamp:
6/23/2026 9:35:17 AM

CALGREEN CHECKLIST (4 OF 4)
CA4.4
FOR BLUEBEAM LABELING/OCR:

2025 CALIFORNIA GREEN BUILDING STANDARDS CODE
NONRESIDENTIAL MANDATORY MEASURES, SHEET 4

Y = YES
N/A = NOT APPLICABLE
RESPON. PARTY = RESPONSIBLE PARTY (ie: ARCHITECT, ENGINEER, OWNER, CONTRACTOR, INSPECTOR ETC.)

5.504.4.3 Paints and coatings. Architectural paints and coatings shall comply with VOC limits in Table 1 of the ARB Architectural Coatings Suggested Control Measure, as shown in Table 5.504.4.3, unless more stringent local limits apply. The VOC content limit for coatings that do not meet the definitions for the specialty coatings categories listed in Table 5.504.4.3 shall be determined by classifying the coating as a Flat, Nonflat or Nonflat-High Gloss coating, based on its gloss, as defined in Subsections 4.21, 4.36 and 4.37 of the 2007 California Air Resources Board Suggested Control Measure, and the corresponding Flat, Nonflat or Nonflat-High Gloss VOC limit in Table 5.504.4.3 shall apply.

5.504.4.3.1 Aerosol Paints and coatings. Aerosol paints and coatings shall meet the PWMIR Limits for ROC in Section 94522(a)(3) and other requirements, including prohibitions on use of certain toxic compounds and ozone depleting substances, in Sections 94522(c)(2) and (d)(2) of *California Code of Regulations*, Title 17, commencing with Section 94520; and in areas under the jurisdiction of the Bay Area Air Quality Management District additionally comply with the percent VOC by weight of product limits of Regulation 8 Rule 49.

TABLE 5.504.4.3 - VOC CONTENT LIMITS FOR ARCHITECTURAL COATINGS[2,3]

GRAMS OF VOC PER LITER OF COATING, LESS WATER & LESS EXEMPT COMPOUNDS

COATING CATEGORY	CURRENT VOC LIMIT
FLAT COATINGS	50
NONFLAT COATINGS	100
NONFLAT HIGH GLOSS COATINGS	150
SPECIALTY COATINGS:	
ALUMINUM ROOF COATINGS	400
BASEMENT SPECIALTY COATINGS	400
BITUMINOUS ROOF COATINGS	50
BITUMINOUS ROOF PRIMERS	350
BOND BREAKERS	350
CONCRETE CURING COMPOUNDS	350
CONCRETE/MASONRY SEALERS	100
DRIVEWAY SEALERS	50
DRY FOG COATINGS	150
FAUX FINISHING COATINGS	350
FIRE RESISTIVE COATINGS	350
FLOOR COATINGS	100
FORM-RELEASE COMPOUNDS	250
GRAPHIC ARTS COATINGS (SIGN PAINTS)	500
HIGH-TEMPERATURE COATINGS	420
INDUSTRIAL MAINTENANCE COATINGS	250
LOW SOLIDS COATINGS[1]	120
MAGNESITE CEMENT COATINGS	450
MASTIC TEXTURE COATINGS	100
METALLIC PIGMENTED COATINGS	500
MULTICOLOR COATINGS	250
PRETREATMENT WASH PRIMERS	420
PRIMERS, SEALERS, & UNDERCOATERS	100
REACTIVE PENETRATING SEALERS	350
RECYCLED COATINGS	250
ROOF COATINGS	50
RUST PREVENTATIVE COATINGS	250
SHELLACS:	
CLEAR	730
OPAQUE	550
SPECIALTY PRIMERS, SEALERS & UNDERCOATERS	100
STAINS	250
STONE CONSOLIDANTS	450
SWIMMING POOL COATINGS	340
TRAFFIC MARKING COATINGS	100
TUB & TILE REFINISH COATINGS	420
WATERPROOFING MEMBRANES	250
WOOD COATINGS	275
WOOD PRESERVATIVES	350
ZINC-RICH PRIMERS	340

1. GRAMS OF VOC PER LITER OF COATING, INCLUDING WATER & EXEMPT COMPOUNDS
2. THE SPECIFIED LIMITS REMAIN IN EFFECT UNLESS REVISED LIMITS ARE LISTED IN SUBSEQUENT COLUMNS IN THE TABLE.
3. VALUES IN THIS TABLE ARE DERIVED FROM THOSE SPECIFIED BY THE CALIFORNIA AIR RESOURCES BOARD, ARCHITECTURAL COATINGS SUGGESTED CONTROL MEASURE, FEB. 1, 2008. MORE INFORMATION IS AVAILABLE FROM THE AIR RESOURCES BOARD.

5.504.4.3.2 Verification. Verification of compliance with this section shall be provided at the request of the enforcing agency. Documentation may include, but is not limited to, the following:
1. Manufacturer's product specification
2. Field verification of on-site product containers

5.504.4.4 Carpet Systems.
All carpet installed in the building interior shall meet the requirements of the California Department of Public Health, "Standard Method for the Testing and Evaluation of Volatile Organic Chemical Emissions from Indoor Sources Using Environmental Chambers." Version 1.2, January 2017 (Emission testing method for California Specifications 01350).

See California Department of Public Health's website for certification programs and testing labs. https://www.cdph.ca.gov/Programs/CCDPHP/DEODC/EHLB/IAQ/Pages/VOC.aspx#material

5.504.4.4.1 Carpet cushion. All carpet cushion installed in the building interior shall meet the requirements of the California Department of Public Health,"Standard Method for the Testing and Evaluation of Volatile Organic Chemical Emissions from Indoor Sources Using Environmental Chambers."Version 1.2, January 2017 (Emission testing method for California Specifications 01350).

See California Department of Public Health's website for certification programs and testing labs. https://www.cdph.ca.gov/Programs/CCDPHP/DEODC/EHLB/IAQ/Pages/VOC.aspx#material

5.504.4.4.2 Carpet adhesive. All carpet adhesive shall meet the requirements of Table 5.504.4.1.

5.504.4.5 Composite wood products. Hardwood plywood, particleboard and medium density fiberboard composite wood products used on the interior or exterior of the buildings shall meet the requirements for formaldehyde as specified in ARB's Air Tovics Control Measure (ATCM) for Composite Wood (17 CCR 93120 et seq.). Those materials not exempted under the ATCM must meet the specified emission limits, as shown in Table 5.504.4.5.

5.504.4.5.3 Documentation. Verification of compliance with this section shall be provided as requested by the enforcing agency. Documentation shall include at least one of the following:
1. Product certifications and specifications.
2. Chain of custody certifications.
3. Product labeled and invoiced as meeting the Composite Wood Products regulation (see CCR, Title 17, Section 93120, et seq.).
4. Exterior grade products marked as meeting the PS-1 or PS-2 standards of the Engineered Wood Association, the Australian AS/NZS 2269 or European 636 3S standards.
5. Other methods acceptable to the enforcing agency.

TABLE 5.504.4.5 - FORMALDEHYDE LIMITS[1]

MAXIMUM FORMALDEHYDE EMISSIONS IN PARTS PER MILLION

PRODUCT	CURRENT LIMIT
HARDWOOD PLYWOOD VENEER CORE	0.05
HARDWOOD PLYWOOD COMPOSITE CORE	0.05
PARTICLE BOARD	0.09
MEDIUM DENSITY FIBERBOARD	0.11
THIN MEDIUM DENSITY FIBERBOARD[2]	0.13

1. VALUES IN THIS TABLE ARE DERIVED FROM THOSE SPECIFIED BY THE CALIFORNIA AIR RESOURCES BOARD, AIR TOXICS CONTROL MEASURE FOR COMPOSITE WOOD AS TESTED IN ACCORDANCE WITH ASTM E 1333. FOR ADDITIONAL INFORMATION, SEE CALIFORNIA CODE OF REGULATIONS, TITLE 17, SECTIONS 93120 THROUGH 93120.12.
2. THIN MEDIUM DENSITY FIBERBOARD HAS A MAXIMUM THICKNESS OF 5/16 INCHES (8 MM).

5.504.4.6 Resilient flooring systems. Where resilient flooring is installed, at least 80 percent of floor area receiving resilient flooring shall meet the requirements of the California Department of Public Health,"Standard Method for the Testing and Evaluation of Volatile Organic Chemical Emissions from Indoor Sources Using Environmental Chambers," Version 1.2, January 2017 (Emission testing method for California Specifications 01350)

See California Department of Public Health's website for certification programs and testing labs. https://www.cdph.ca.gov/Programs/CCDPHP/DEODC/EHLB/IAQ/Pages/VOC.aspx#material

5.504.4.6.1 Verification of compliance. Documentation shall be provided verifying that resilient flooring materials meet the pollutant emission limits.

5.504.4.7 Thermal insulation
Comply with the requirements of the California Department of Public Health, "Standard Method of the Testing and Evaluation of Volatile Organic Chemical Emissions from Indoor Sources Using Environmental Chambers, "Version 1.2, January 1.2, January 2017 (Emission testing method for California Specification 01350).
See California Department of Public Health's website for certification programs and testing labs. https://www.cdph.ca.gov/Programs/CCDPHP/DEODC/EHLB/IAQ/Pages/VOC.aspx#material

5.504.4.7.1 Verification of compliance.
Documentation shall be provided verifying that thermal insulation materials meet the pollutant emission limits.

5.504.4.8 Acoustical ceiling and wall panels.
Comply with the requirements of the California Department of Public Health, "Standard Method for the Testing and Evaluation of Volatile Organic Chemical Emissions from Indoor Sources Using Environmental Chambers, " Version 1.2, January 2017 (Emission testing method for California Specification 01350).
See California Department of Public Health's website for certification programs and testing labs.

5.504.4.8.1 Verification of compliance. Documentation shall be provided verifying that acoustical finish materials meet the pollutant emission limits.

5.504.5 Filters. In mechanically ventilated buildings, provide regularly occupied areas of the building with air filtration media for outside and return air that provides at least a Minimum Efficiency Reporting Value (MERV) of 13. MERV 13 filters shall be installed prior to occupancy, and recommendations for maintenance with filters of the same value shall be included in the operation and maintenance manual.

Exceptions: Existing mechanical equipment.

5.504.5.1 Labeling. Installed filters shall be clearly labeled by the manufacturer indicating the MERV rating.

5.504.7 ENVIRONMENTAL TOBACCO SMOKE (ETS) CONTROL. Where outdoor areas are provided for smoking, prohibit smoking within 25 feet of building entries, outdoor air intakes and operable windows and within the building as already prohibited by other laws or regulations; or as enforced by ordinances, regulations or policies of any city, county, city and county, California Community College, campus of the California State University, or campus of the University of California, whichever are more stringent. When ordinances, regulations or policies are not in place, post signage to inform building occupants of the prohibitions.

SECTION 5.505 INDOOR MOISTURE CONTROL

5.505.1 INDOOR MOISTURE CONTROL. Buildings shall meet or exceed the provisions of California Building Code, CCR, Title 24, Part 2, Sections 1202 (Ventilation) and Chapter 14 (Exterior Walls). For additional measures, see Section 5.407.2 of this code.

SECTION 5.506 INDOOR AIR QUALITY

5.506.1 OUTSIDE AIR DELIVERY. For mechanically or naturally ventilated spaces in buildings, meet the minimum requirements of Section 120.1 (Requirements For Ventilation) of the *California Energy Code*, or the applicable local code, whichever is more stringent, and Division 1, Chapter 4 of CCR, Title 8.

5.506.2 CARBON DIOXIDE (CO_2) MONITORING. For buildings or additions equipped with demand control ventilation, CO_2 sensors and ventilation controls shall be specified and installed in accordance with the requirements of the California Energy Code, Section 120(c)(4).

5.506.3 Carbon dioxide (CO2) monitoring in classrooms.
[DSA-SS] Classrooms and other similar rooms that are used for group instruction shall be equipped with a carbon dioxide monitor or sensor.

[BSC-CG] Newly constructed projects and qualifying additions and alterations (per scope in Section 301.3) for University of California, California State University and private school classrooms, lecture and post-secondary classrooms shall be equipped with a carbon dioxide monitor or sensor.

[DSA-SS, BSC-CG] The carbon dioxide monitor or sensor shall meet the following requirements:
1. The monitor or sensor shall be permanently affixed in a tamper-proof manner in each classroom between 3 and 6 feet (914 mm and 1829 mm) above the floor and at least 5 feet (1524 mm) away from door and operable windows.
2. When the monitor or sensor is not integral to an Energy Management Control System (EMCS), the monitor or sensor shall display the carbon dioxide readings on the device. When the sensor is integral to an EMCS, the carbon dioxide readings shall be available to and regularly monitored by facility personnel.
3. A monitor shall provide notification though a visual indicator on the monitor when the carbon dioxide levels in the classroom have exceeded 1,100ppm. A sensor integral to an EMCS shall provide notification to facility personnel through a visual and/or audible indicator when the carbon dioxide levels in the classroom have exceed 1,100ppm.
4. The monitor or EMCS devices used to measure carbon dioxide levels shall maintain a record of previous data that includes at least the maximum carbon dioxide concentration measured.
5. The monitor or sensor used to measure carbon dioxide levels shall have the capacity to measure carbon dioxide levels with a range of 400ppm to 2000ppm or greater.
6. The monitor or sensor shall be certified by the manufacturer to be accurate within 75ppm at 1,000ppm carbon dioxide concentration and shall be certified by the manufacturer to require calibration no more frequently than once every 5 years.

SECTION 5.507 ENVIRONMENTAL COMFORT

5.507.4 ACOUSTICAL CONTROL. Employ building assemblies and components with Sound Transmission Class (STC) values determined in accordance with ASTM E 90 and ASTM E 413, or Outdoor-Indoor Sound Transmission Class (OITC) determined in accordance with ASTM E 1332, using either the prescriptive or performance method in Section 5.507.4.1 or 5.507.4.2.

Exception: Buildings with few or no occupants or where occupants are not likely to be affected by exterior noise, as determined by the enforcement authority, such as factories, stadiums, storage, enclosed parking structures and utility buildings.

Exception: [DSA-SS] For public schools and community colleges, the requirements of this section and all subsections apply only to new construction.

5.507.4.1 Exterior noise transmission, prescriptive method. Wall and roof-ceiling assemblies exposed to the noise source making up the building or addition envelope or altered envelope shall meet a composite STC rating of at least 50 or a composite OITC rating of no less than 40, with exterior windows of a minimum STC of 40 or OITC of 30 in the following locations:

1. Within the 65 CNEL noise contour of an airport.

   Exceptions:

   1. L_{dn} or CNEL for military airports shall be determined by the facility Air Installation Compatible Land Use Zone (AICUZ) plan.
   2. L_{dn} or CNEL for other airports and heliports for which a land use plan has not been developed shall be determined by the local general plan noise element.

2. Within the 65 CNEL or L_{dn} noise contour of a freeway or expressway, railroad, industrial source or fixed-guideway source as determined by the Noise Element of the General Plan.

5.507.4.1.1. Noise exposure where noise contours are not readily available. Buildings exposed to a noise level of 65 dB L_{eq} - 1-hr during any hour of operation shall have building, addition or alteration exterior wall and roof-ceiling assemblies exposed to the noise source meeting a composite STC rating of at least 45 (or OITC 35), with exterior windows of a minimum STC of 40 (or OITC 30).

5.507.4.2 Performance Method. For buildings located as defined in Section 5.507.4.1 or 5.507.4.1.1, wall and roof-ceiling assemblies exposed to the noise source making up the building or addition envelope or altered envelope shall be constructed to provide an interior noise environment attributable to exterior sources that does not exceed an hourly equivalent noise level (Leq-1Hr) of 50 dBA in occupied areas during any hour of operation.

5.507.4.2.1 Site Features. Exterior features such as sound walls or earth berms may be utilized as appropriate to the building, addition or alteration project to mitigate sound migration to the interior.

5.507.4.2.2 Documentation of Compliance. An acoustical analysis documenting complying interior soundlevels shall be prepared by personnel approved by the architect or engineer of record.

5.507.4.3 Interior sound transmission. Wall and floor-ceiling assemblies separating tenant spaces and tenant spaces and public places shall have an STC of at least 40.

Note: Examples of assemblies and their various STC ratings may be found at the California Office of Noise Control: www.toolbase.org/PDF/CaseStudies/stc_icc_ratings.pdf.

SECTION 5.508 OUTDOOR AIR QUALITY

5.508.1 Ozone depletion and greenhouse gas reductions. Installations of HVAC, refrigeration and fire suppression equipment shall comply with Sections 5.508.1.1 and 5.508.1.2.

5.508.1.1 Chlorofluorocarbons (CFCs). Install HVAC, refrigeration and fire suppression equipment that do not contain CFCs.

5.508.1.2 Halons. Install HVAC, refrigeration and fire suppression equipment that do not contain Halons.

5.508.2 Supermarket refrigerant leak reduction. New commercial refrigeration systems shall comply with the provisions of this section when installed in retail food stores 8,000 square feet or more conditioned area, and that utilize either refrigerated display cases, or walk-in coolers or freezers connected to remote compressor units or condensing units. The leak reduction measures apply to refrigeration systems containing high-global-warming potential (high-GWP) refrigerants with a GWP of 150 or greater. New refrigeration systems include both new facilities and the replacement of existing refrigeration systems in existing facilities.

Exception: Refrigeration systems containing low-global warming potential (low-GWP) refrigerant with a GWP value less than 150 are not subject to this section. Low-GWP refrigerants are nonozone-depleting refrigerants that include ammonia, carbon dioxide (CO_2), and potentially other refrigerants.

5.508.2.1 Refrigerant piping. Piping compliant with the California Mechanical Code shall be installed to be accessible for leak protection and repairs. Piping runs using threaded pipe, copper tubing with an outside diameter (OD) less than 1/4 inch, flared tubing connections and short radius elbows shall not be used in refrigerant systems except as noted below.

5.508.2.1.1 Threaded pipe. Threaded connections are permitted at the compressor rack.

5.508.2.1.2 Copper pipe. Copper tubing with an OD less than 1/4 inch may be used in systems with a refrigerant charge of 5 pounds or less.

5.508.2.1.2.1 Anchorage. One-fouth-inch OD tubing shall be securely clamped to a rigid base to keep vibration levels below 8 mils.

5.508.2.1.3 Flared tubing connections. Double-flared tubing connections may be used for pressure controls, valve pilot lines and oil.

Exception: Single-flared tubing connections may be used with a multiring seal coated with industrial sealant suitable for use with refrigerants and tightened in accordance with manufacturer's recommendations.

5.508.2.1.4 Elbows. Short radius elbows are only permitted where space limitations prohibit use of long radius elbows.

5.508.2.2 Valves. Valves Valves and fittings shall comply with the *California Mechanical Code* and as follows.

5.508.2.2.1 Pressure relief valves. For vessels containing high-GWP refrigerant, a rupture disc shall be installed between the outlet of the vessel and the inlet of the pressure relief valve.

5.508.2.2.1.1 Pressure detection. A pressure gauge, pressure transducer or other device shall be installed in the space between the rupture disc and the relief valve inlet to indicate a disc rupture or discharge of the relief valve.

5.508.2.2.2 Access valves. Only Schrader access valves with a brass or steel body are permitted for use.

5.508.2.2.2.1 Valve caps. For systems with a refrigerant charge of 5 pounds or more, valve caps shall be brass or steel and not plastic.

5.508.2.2.2.2 Seal caps. If designed for it, the cap shall have a neoprene O-ring in place.

5.508.2.2.2.2.1 Chain tethers. Chain tethers to fit ovr the stem are required for valves designed to have seal caps.

Exception: Valves with seal caps that are not removed from the valve during stem operation.

5.508.2.3 Refrigerated service cases. Refrigerated service cases holding food products containing vinegar and salt shall have evaporator coils of corrosion-resistant material, such as stainless steel; or be coated to prevent corrosion from these substances.

5.508.2.3.1 Coil coating. Consideration shall be given to the heat transfer efficiency of coil coating to maximize energy efficiency.

5.508.2.4 Refrigerant receivers. Refrigerant receivers with capacities greater than 200 pounds shall be fitted with a device tha indicates the level of refrigerant in the receiver.

5.508.2.5 Pressure testing. The system shall be pressure tested during installation prior to evacuation and charging.

5.508.2.5.1 Minimum pressure. The system shall be charged with regulated dry nitrogen and appropriate tracer gas to bring system pressure up to 300 psig minimum.

5.508.2.5.2 Leaks. Check the system for leaks, repair any leaks, and retest for pressure using the same gauge.

5.508.2.5.3 Allowable pressure change. The system shall stand, unaltered, for 24 hours with no more than a +/- one pound pressure change from 300 psig, measured with the same gauge.

5.508.2.6 Evacuation. The system shall be evacuated after pressure testing and prior to charging.

5.508.2.6.1 First vacuum. Pull a system vacuum down to at least 1000 microns (+/- 50 microns), and hold for 30 minutes.

5.508.2.6.2 Second vacuum. Pull a second system vacuum to a minimum of 500 microns and hold for 30 minutes.

5.508.2.6.3 Third vacuum. Pull a third vacuum down to a minimum of 300 microns, and hold for 24 hours with a maximum drift of 100 microns over a 24-hour period.

CHAPTER 7
INSTALLER & SPECIAL INSPECTOR QUALIFICATIONS

702 QUALIFICATIONS

702.1 INSTALLER TRAINING. HVAC system installers shall be trained and certified in the proper installation of HVAC systems including ducts and equipment by a nationally or regionally recognized training or certification program. Uncertified persons may perform HVAC installations when under the direct supervision and responsibility of a person trained and certified to install HVAC systems or contractor licensed to install HVAC systems. Examples of acceptable HVAC training and certification programs include but are not limited to the following:

1. State certified apprenticeship programs.
2. Public utility training programs.
3. Training programs sponsored by trade, labor or statewide energy consulting or verification organizations.
4. Programs sponsored by manufacturing organizations.
5. Other programs acceptable to the enforcing agency.

702.2 SPECIAL INSPECTION [HCD]. When required by the enforcing agency, the owner or the responsible entity acting as the owner's agent shall employ one or more special inspectors to provide inspection or other duties necessary to substantiate compliance with this code. Special inspectors shall demonstrate competence to the satisfaction of the enforcing agency for the particular type of inspection or task to be performed. In addition to other certifications or qualifications acceptable to the enforcing agency, the following certifications or education may be considered by the enforcing agency when evaluating the qualifications of a special inspector:

1. Certification by a national or regional green building program or standard publisher.
2. Certification by a statewide energy consulting or verification organization, building performance contractors, and home energy auditors.
3. Successful completion of a third party apprentice training program in the appropriate trade.
4. Other programs acceptable to the enforcing agency.

Notes:

1. Special inspectors shall be independent entities with no financial interest in the materials or the project they are inspecting for compliance with this code.

[BSC-CG] When required by the enforcing agency, the owner or the responsible entity acting as the owner's agent shall employ one or more special inspectors to provide inspection or other duties necessary to substantiate compliance with this code. Special inspectors shall demonstrate competence to the satisfaction of the enforcing agency for the particular type of inspection or task to be performed. In addition, the special inspector shall have a certification from a recognized state, national or international association, as determined by the local agency. The area of certification shall be closely related to the primary job function, as determined by the local agency.

Note: Special inspectors shall be independent entities with no financial interest in the materials or the project they are inspecting for compliance with this code.

703 VERIFICATIONS

703.1 DOCUMENTATION. Documentation used to show compliance with this code shall include but is not limited to, construction documents, plans, specifications, builder or installer certification, inspection reports, or other methods acceptable to the enforcing agency which demonstrate substantial conformance. When specific documentation or special inspection is necessary to verify compliance, that method of compliance will be specified in the appropriate section or identified applicable checklist.

DISCLAIMER: *THIS DOCUMENT IS PROVIDED AND INTENDED TO BE USED AS A MEANS TO INDICATE AREAS OF COMPLIANCE WITH THE CALIFORNIA GREEN BUILDING STANDARDS (CALGREEN) CODE. DUE TO THE VARIABLES BETWEEN BUILDING DEPARTMENT JURISDICTIONS, THIS CHECKLIST IS TO BE USED ON AN INDIVIDUAL PROJECT BASIS AND MAY BE MODIFIED BY THE END USER TO MEET THOSE INDIVIDUAL NEEDS. THE END USER ASSUMES ALL RESPONSIBILITY ASSOCIATED WITH THE USE OF THIS DOCUMENT, INCLUDING VERIFICATION WITH THE FULL CODE.*

PBK
FRESNO, CA
559-448-8400
www.pbk.com

PARLIER HS STADIUM REPLACEMENT
603 3rd Street
Parlier, CA 93648
CLIENT PROJECT NO: 250093
DSA SUBMISSION
DSA APPL. NO.: 02-124002 DSA FILE NO.: 10-H12

PARLIER UNIFIED SCHOOL DISTRICT

LICENSED ARCHITECT
MICHELE GARGANO
No. C-32500
RENEWAL DATE
JUNE 21, 2027
STATE OF CALIFORNIA

CLIENT
PARLIER UNIFIED SCHOOL DISTRICT
DATE 2026/02/09
PROJECT NUMBER 250093
DRAWING HISTORY

No.	Description	Date

CHECKED BY: Checker
DRAWN BY: Author

CALGREEN CHECKLIST (4 OF 4)

CA4.4

Plot Stamp:
6/23/2026 9:35:21 AM

0"
1"

GENERAL TOPOGRAPHIC SURVEY LEGEND:

(NOT ALL SYMBOLS SHOWN APPEAR ON THE PLANS)

AB	ABUTMENT
AC	ASPHALTIC CONCRETE
ACE	ASPHALTIC CONCRETE EDGE
AD	ASPHALTIC CONCRETE DIKE
AWT	ALL-WEATHER TRACK
BD	BRIDGE DECK
BFC	BOTTOM FACE OF CURB
BGST	STEPS
BGTR	TOP OF ROOF
BGV	BUILDING VENTS
BOD	BOTTOM OF DITCH
BR	BARRICADE
BRK	BRICK
BW	BLOCK WALL
CB	CATCH BASIN
CDA	CONCRETE DRIVE APPROACH
CE	CONCRETE EDGE
CMP	CORRUGATED METAL PIPE
CON	CONCRETE
COTH	COMMUNICATION TRENCH
CR	CROWN OF ROAD
CRQ	QUARTER CROWN
CS	CONCRETE SLAB
CULV	CULVERT
CW	CONCRETE WALL
DD	DOWN DRAIN
DFL	DITCH FLOWLINE
DWY	DRIVEWAY
ECTH	ELECTRICAL TRENCH
EDR	EDGE OF DIRT ROAD
EGR	EDGE OF GRAVEL ROAD
EOD	EDGE OF OILED DIRT
EP	EDGE OF PAVEMENT
ES	EDGE OF SHOULDER
ET	EDGE OF TRAVELED WAY
FF	FINISH FLOOR
FOTH	FIBER OPTIC TRENCH
GB	GRADE BREAK
GFL	GUTTER FLOWLINE
GR	GRATE
GRA	GRAVEL SPOT SHOT
GRAE	EDGE OF GRAVEL
GSTH	GAS TRENCH
HDR	WOOD HEADER
HW	HEAD WALL
KR	K-RAIL
LIP	LIP OF GUTTER
LSDE	DECOMPOSED GRANITE EDGE
LSDG	DECOMPOSED GRANITE
LSGC	GROUND COVER
LSGF	GOLF COURSE FAIRWAY
LSGG	GOLF COURSE GREEN
LSGT	GOLF COURSE TEE
LSSA	SAND
LSSP	SLOPE PROTECTION
LSST	GOLF COURSE SAND TRAP
NPTH	NON-POTABLE TRENCH
PA	PATIO
PGTH	PROPANE GAS TRENCH
POS	POINT ON SLOPE
RCP	REINFORCED CONCRETE
RIEL	RIPARIAN EDGE OF LAKE
RIEP	RIPARIAN EDGE OF POND
RIES	RIPARIAN EDGE OF STREAM
RIEW	RIPARIAN EDGE OF WETLAND
RIFL	RIPARIAN FLOWLINE
RIMC	RIPARIAN MISC.
RIP	RIP-RAP SLOPE PROTECTION
RK	ROCK
RW	RETAINING WALL
SB	SPEED BUMP
SDCD	STORM DRAIN CROSS DRAIN
SDFL	STORM DRAIN FLOWLINE
SDGR	STORM DRAIN GRATE
SDMG	STORM DRAIN MANHOLE W/ GRATE
SSFL	SEWER FLOWLINE
SDTH	STORM DRAIN TRENCH
SSGT	STORM DRAIN GREASE TRAP
SSST	SEWER TANK (SEPTIC)
SSTH	SEWER TRENCH
SWK	SIDEWALK
SWL	SWALE
T	TURF
TBC	TOP BACK OF CURB
TBW	TOP BACK OF WALK
TF	TOP OF FOOTING
TFC	TOP FACE OF CURB
TFW	TOP FACE OF WALK
TLTH	TELEPHONE TRENCH
TOB	TOP OF BANK
TOE	TOE OF SLOPE
TOP	TOP OF SLOPE
TRDO	TRUNCATED DOMES
TVTH	TV TRENCH
TW	TOP OF WALL
UTH	UNIDENTIFIED TRENCH/SCAR LINE
VGFL	VALLEY GUTTER FLOWLINE
VGR	VALLEY GUTTER
WALBA	BARRIER WALL
WALBW	BLOCK WALL
WALCW	CONCRETE WALL
WALHW	HEAD WALL
WALRW	RETAINING WALL
WALWW	WING WALL
WCR	WHEELCHAIR RAMP
WLPD	WELL PAD
WTTH	WATER TRENCH
WW	WING WALL
(335.21)	EXISTING ELEVATION
AL	ACCENT LIGHT
AV	ALFALFA VALVE
	BACKFLOW ASSEMBLY
	BASKETBALL GOAL
BOV	BLOW-OFF VALVE
	BM=BENCHMARK; OR SBM=SITE BENCHMARK
BO	BOLLARD
CO	CLEANOUT
COMB	COMMUNICATION PULLBOX
CVA	COMMUNICATION VAULT
312.55	SURVEY CONTROL MONUMENT
DF	DRINKING FOUNTAIN
DS	DOORSTOP
DW	DRYWELL
EG	ELECTRICAL GROUND
ELC	ELECTRICAL CONDUIT
	ELECTRICAL METER
EPB	ELECTRICAL PULLBOX
	ELECTRICAL VAULT LID
ETS	GAS ELECTRONIC TESTING STATION
FDC	FIRE DEPARTMENT CONNECTION
	FIRE HYDRANT
FP	FENCE POST
FLP	FLAG POLE
GAS	GAS LINE; DIAMETER AS SHOWN
GR	GAS REGULATOR
GAV	IRRIGATION GATE VALVE
	GAS METER
GOP	GOAL POST
GP	GUY POLE
GS	GATE STOP
GSR	GAS RISER
GV	GAS VALVE
GRD	GROUNDING ROD
GUY	GUY WIRE
HB	HOSE BIBB
HR	HANDRAIL
ICB	IRRIGATION CONTROLLER
	IRRIGATION DISTRICT MANHOLE
IVA	IRRIGATION REMOTE CONTROL VALVE
ISB	IRRIGATION SPLICE BOX
IHB	IN-GROUND HOSE BIBB
IP	IRON PIPE
JP	JOINT UTILITY POLE
LP	LIGHT POLE
MB	MAIL BOX
	MANHOLE
MV	MANUAL IRRIGATION VALVE
PB	PULLBOX
PIV	POST INDICATOR VALVE
	UTILITY STUB
Rx	PARKING METER
POST	POST; DIAMETER AS SHOWN
PP	POWER POLE
6" PVC	PVC PIPE; DIAMETER AS SHOWN
QC	QUICK COUPLER VALVE
RD	ROOF DRAIN
RDU	ROOF DRAIN UNDERGROUND
RS	ROOF SUPPORT
	STADIUM LIGHT POLE
	STORM DRAIN MANHOLE
	SIGN
PPB	SIGNAL LIGHT PUSH BUTTON
	STORM DRAIN GRATE
	STREET LIGHT
4" SLE	PIPE SLEEVE; DIAMETER AS SHOWN
	SLOPE
SLPB	STREET LIGHT PULLBOX
4"SLV	PIPE SLEEVE; DIAMETER AS SHOWN
	SEWER MANHOLE
SP	SERVICE POLE
SPB	SIGNAL PULLBOX
	SPRINKLER
4" SPO	STEEL POST; DIAMETER AS SHOWN
12"SS	SAND SEPARATOR; SIZE AS NOTED
24"STP	STAND PIPE; DIAMETER AS NOTED
12"STUMP	TREE STUMP; DIAMETER AS SHOWN
MW	SURVEY MONUMENT WELL
4"TEL	TELEPHONE; DIAMETER AS SHOWN
	TELEPHONE MANHOLE
TN	TENNIS NET POLE
TP	TELEPHONE POLE
TPB	TELEPHONE PULLBOX
TVPB	TELEVISION PULLBOX
	TREE; SPREAD SHOWN GRAPHICALLY AND TRUNK DIAMETER AS SHOWN
	PALM TREE; SPREAD SHOWN GRAPHICALLY
TSB	TELEPHONE SPLICE BOX
	TRAFFIC SIGNAL POLE
TSPB	TRAFFIC SIGNAL PULLBOX
UP	UTILITY POLE
UR	UTILITY RISER
VB	VACUUM BREAKER
VN	VOLLEYBALL NET POST
2"VP	VENT PIPE; DIAMETER AS SHOWN
WELL	WELL
	WATER METER
WP	WELL PUMP
6"WPO	CIRCULAR WOOD POST; DIAMETER AS SHOWN
4"X4"WPO	SQUARE WOOD POST; SIZE AS SHOWN
4"W	WATER LINE; DIAMETER AS SHOWN
WV	WATER VALVE
	ASPHALT PAVEMENT
	CONCRETE BLOCK WALL
	BUILDING
	CONCRETE
	DETECTABLE WARNINGS
	DG OR GRAVEL
	CHAIN LINK FENCE
	CHAIN LINK ROLL GATE
	EDGE OF ASPHALT PAVEMENT
	WOOD FENCE
	DIRECTION OF FLOW
E	UNDERGROUND ELECTRIC
8" G	GAS LINE; SIZE AS NOTED
OT	OVERHEAD TELEPHONE
18" SD	STORM DRAIN LINE; SIZE AS NOTED
12" S	SEWER LINE; SIZE AS NOTED
T	UNDERGROUND TELEPHONE
6" W	WATER LINE; SIZE AS NOTED
12" AG	AGRICULTURAL IRRIGATION LINE; SIZE AS NOTED
1" A	AIR LINE; SIZE AS NOTED
C	COMMUNICATION LINE
350	MAJOR GRADE CONTOUR LINE
345	MINOR GRADE CONTOUR LINE
3" CW	CHILLED WATER LINE; SIZE AS NOTED
3" CWR	CHILLED WATER RETURN LINE; SIZE AS NOTED
3" CWS	CHILLED WATER SUPPLY LINE; SIZE AS NOTED
	LIMIT OF DIRT
	LIMIT OF TURF
1" DL	DRAIN LINE; SIZE AS NOTED
EMS	EMERGENCY MANAGEMENT SYSTEM
FA	FIRE ALARM LINE
8" F	FIRE LINE; SIZE AS NOTED
FO	FIBER OPTIC LINE
	DRAIN TUBE
2" HW	HOT WATER LINE; SIZE AS NOTED
2" HWR	HOT WATER RETURN LINE; SIZE AS NOTED
2" HWS	HOT WATER SUPPLY LINE; SIZE AS NOTED
HYD	HYDRAULIC LINE
18" ID	IRRIGATION DISTRICT; SIZE AS NOTED
	IRON FENCE
4" IRR	IRRIGATION MAIN LINE; SIZE AS NOTED
1" L	IRRIGATION LATERAL LINE; SIZE AS NOTED
ITS	INTELLIGENT TRAFFIC SYSTEM
JT	JOINTLY TRENCHED UTILITIES
OC	OVERHEAD COMMUNICATIONS LINE
OE	OVERHEAD ELECTRIC LINE
OEC	OVERHEAD ELECTRIC AND COMMUNICATION LINE
OET	OVERHEAD ELECTRIC AND TELEPHONE LINE
OETV	OVERHEAD ELECTRIC AND TELEVISION LINE
OETVT	OVERHEAD ELECTRIC, TELEVISION AND TELEPHONE LINE
OTS	OVERHEAD TRAFFIC SIGNAL LINE
OTV	OVERHEAD TELEVISION LINE
OU	OVERHEAD UTILITY LINE
6" P	PETROLEUM LINE; SIZE AS NOTED
6" RW	RECYCLED WATER IRRIGATION LINE; SIZE AS NOTED
8"	SEWER AND STORM DRAIN LINE; SIZE AS NOTED
6" SFM	SEWER FORCE MAIN; SIZE AS NOTED
2" ST	STEAM LINE; SIZE AS NOTED
TFO	TRAFFIC FIBER OPTIC LINE
TS	TRAFFIC SIGNAL LINE
TV	TELEVISION LINE
UNK	UNKNOWN UTILITY LINE
	WIRE FENCE
	PROPERTY LINE
	CITY LIMIT
	EASEMENT 1
	EASEMENT 2
	RIGHT-OF-WAY LINE
	SETBACK LINE

SURVEY NOTES:

1. *THIS TOPOGRAPHIC SURVEY LOCATES SPECIFIC PHYSICAL FEATURES OF THE SITE AND THEIR ELEVATION AS DETERMINED NECESSARY BY THE PROJECT ENGINEER. IT IS NOT A COMPLETE TOPOGRAPHIC SURVEY OF THE SITE. THE INFORMATION SHOWN REFLECTS THE DATA OBTAINED BY FIELD SURVEY CONDUCTED ON 02/06/2025 AND 01/05/2026.*
2. *UTILITY INFORMATION SHOWN HEREON IS BASED ON RECORD INFORMATION SUPPLIED TO THE ENGINEER BY UTILITY COMPANIES, PUBLIC AGENCIES AND THE PROPERTY OWNER, TOGETHER WITH OBSERVATION OF VISIBLE EVIDENCE BY A FIELD SURVEY. THE ENGINEER CAN MAKE NO GUARANTEE AS TO THE ACCURACY OR COMPLETENESS OF THE UNDERGROUND UTILITY FACILITIES SHOWN. PRIOR TO ANY SITE EXCAVATIONS, THE CONTRACTOR SHALL CONTACT THE OWNER AND UNDERGROUND SERVICE ALERT (USA) AND REQUEST THAT THEY IDENTIFY THE LOCATION OF ALL UNDERGROUND UTILITIES AT THE SITE.*

SITE BENCHMARK:

CHISELED "X" ON TOP FACE OF CURB ALONG FIG AVENUE LOCATED APPROXIMATELY 149' SOUTH OF THE EXISTING POWER POLE LOCATED EASTERLY FROM THE NORTHEAST CORNER OF THE EXISTING BLEACHERS

ELEV.= 345.21 USGS DATUM

PBK
www.pbk.com
559-448-8400
FRESNO, CA

PARLIER HS STADIUM REPLACEMENT

CLIENT PROJECT NO.: 250093
603 3rd Street
Parlier, CA 93648
DSA SUBMISSION
DSA APPL. NO.: 02-124002 DSA FILE NO.: 10-H12

PARLIER UNIFIED SCHOOL DISTRICT

Blair, Church & Flynn
CONSULTING ENGINEERS

REGISTERED PROFESSIONAL ENGINEER
LANE R. BAXTER
No. 47033
CIVIL
STATE OF CALIFORNIA

5-14-26
Date Signed:

CLIENT
PARLIER UNIFIED SCHOOL DISTRICT

DATE	PROJECT NUMBER
2026/02/09	250093

DRAWING HISTORY

No.	Description	Date

CHECKED BY: GP
DRAWN BY: SD

TOPOGRAPHIC NOTES AND LEGEND

CS1.0

Drawing: P:\224\224-040\Site\ProductionDrawings\224404_TO01.dwg, CS1.0 - -----
Plot by: gpinedo Jun 19, 2026 - 5:00pm

PARTIAL TOPOGRAPHIC SURVEY
CS1.1

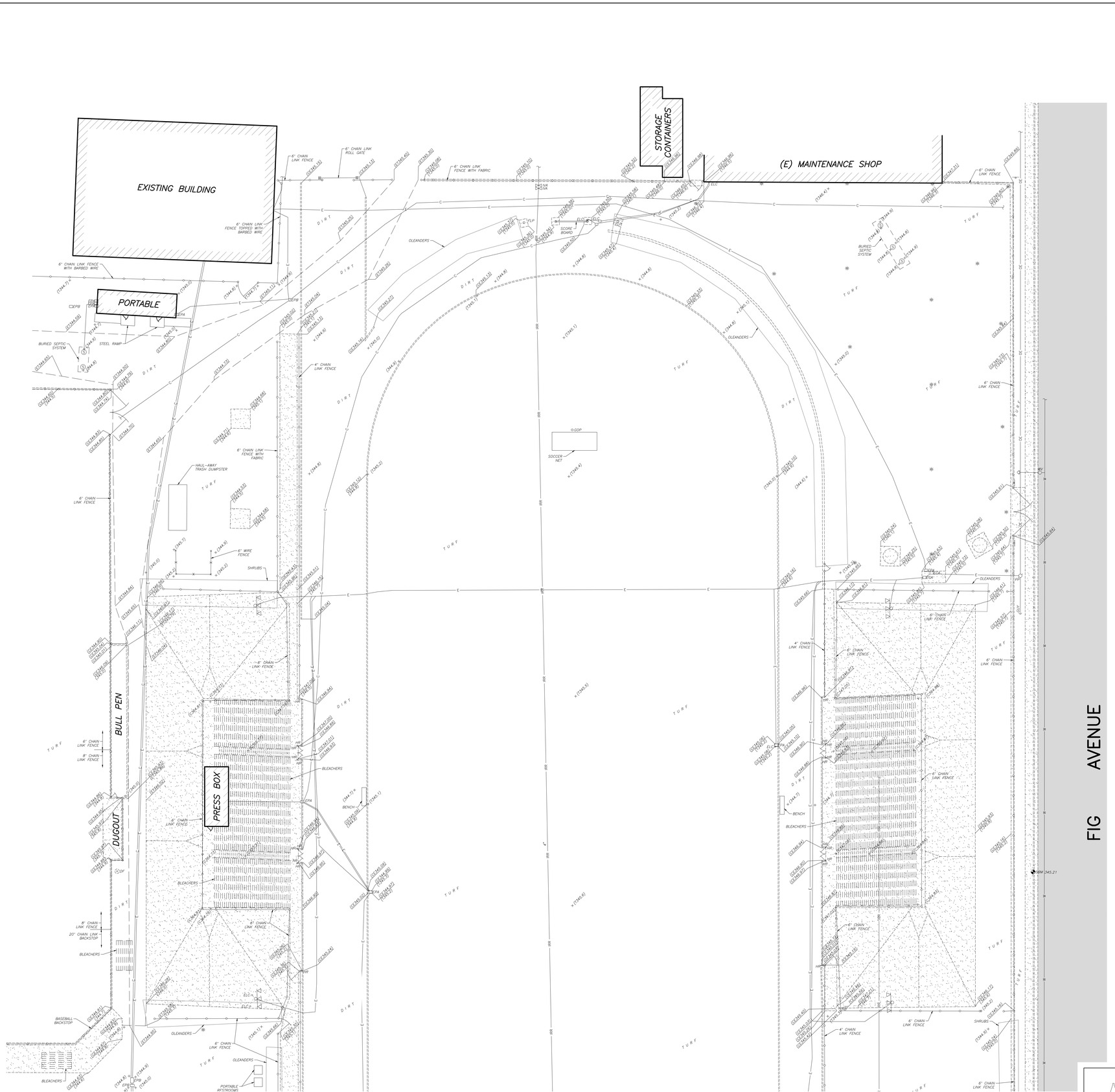

SEE SHEET CS1.2 FOR CONTINUATION

SURVEY NOTES:

1. THIS TOPOGRAPHIC SURVEY LOCATES SPECIFIC PHYSICAL FEATURES OF THE SITE AND THEIR ELEVATION AS DETERMINED NECESSARY BY THE PROJECT ENGINEER. IT IS NOT A COMPLETE TOPOGRAPHIC SURVEY OF THE SITE. THE INFORMATION SHOWN REFLECTS THE DATA OBTAINED BY FIELD SURVEY CONDUCTED ON 02/06/2025 AND 01/05/2026.
2. UTILITY INFORMATION SHOWN HEREON IS BASED ON RECORD INFORMATION SUPPLIED TO THE ENGINEER BY UTILITY COMPANIES, PUBLIC AGENCIES AND THE PROPERTY OWNER, TOGETHER WITH OBSERVATION OF VISIBLE EVIDENCE BY A FIELD SURVEY. THE ENGINEER CAN MAKE NO GUARANTEE AS TO THE ACCURACY OR COMPLETENESS OF THE UNDERGROUND UTILITY FACILITIES SHOWN. PRIOR TO ANY SITE EXCAVATIONS, THE CONTRACTOR SHALL CONTACT THE OWNER AND UNDERGROUND SERVICE ALERT (USA) AND REQUEST THAT THEY IDENTIFY THE LOCATION OF ALL UNDERGROUND UTILITIES AT THE SITE.

SITE BENCHMARK:

CHISELED "X" ON TOP FACE OF CURB ALONG FIG AVENUE LOCATED APPROXIMATELY 149' SOUTH OF THE EXISTING POWER POLE LOCATED EASTERLY FROM THE NORTHEAST CORNER OF THE EXISTING BLEACHERS

ELEV.= 345.21 USGS DATUM

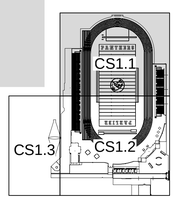

KEYMAP

SCALE: 1"=20'

0 5 20 40
SCALE IN FEET

PBK
FRESNO, CA
559-448-8400
www.pbk.com

PARLIER HS STADIUM REPLACEMENT

603 3rd Street
Parlier, CA 93648

CLIENT PROJECT NO: 250093
DSA SUBMISSION
DSA APPL. NO. : 02-124002 DSA FILE NO. : 10-H12

PARLIER UNIFIED SCHOOL DISTRICT

Blair, Church & Flynn
CONSULTING ENGINEERS

REGISTERED PROFESSIONAL ENGINEER
LANE R. BARTHEL
No. 47033
CIVIL
STATE OF CALIFORNIA
5-14-26
Date Signed:

CLIENT	
PARLIER UNIFIED SCHOOL DISTRICT	
DATE 2026/02/09	PROJECT NUMBER 250093

DRAWING HISTORY

No.	Description	Date

CHECKED BY: GP
DRAWN BY: SD

PARTIAL TOPOGRAPHIC SURVEY

CS1.1

Drawing: P:\124-224-0404\Site\Production\Drawings\224404_TO01.dwg, CS1.1 - ----
Plot by: gsinnette Jun 19, 2026 - 5:00pm

PARTIAL TOPOGRAPHIC SURVEY
CS1.2

0"
1"

SEE SHEET CS1.1 FOR CONTINUATION

SEE SHEET CS1.3 FOR CONTINUATION

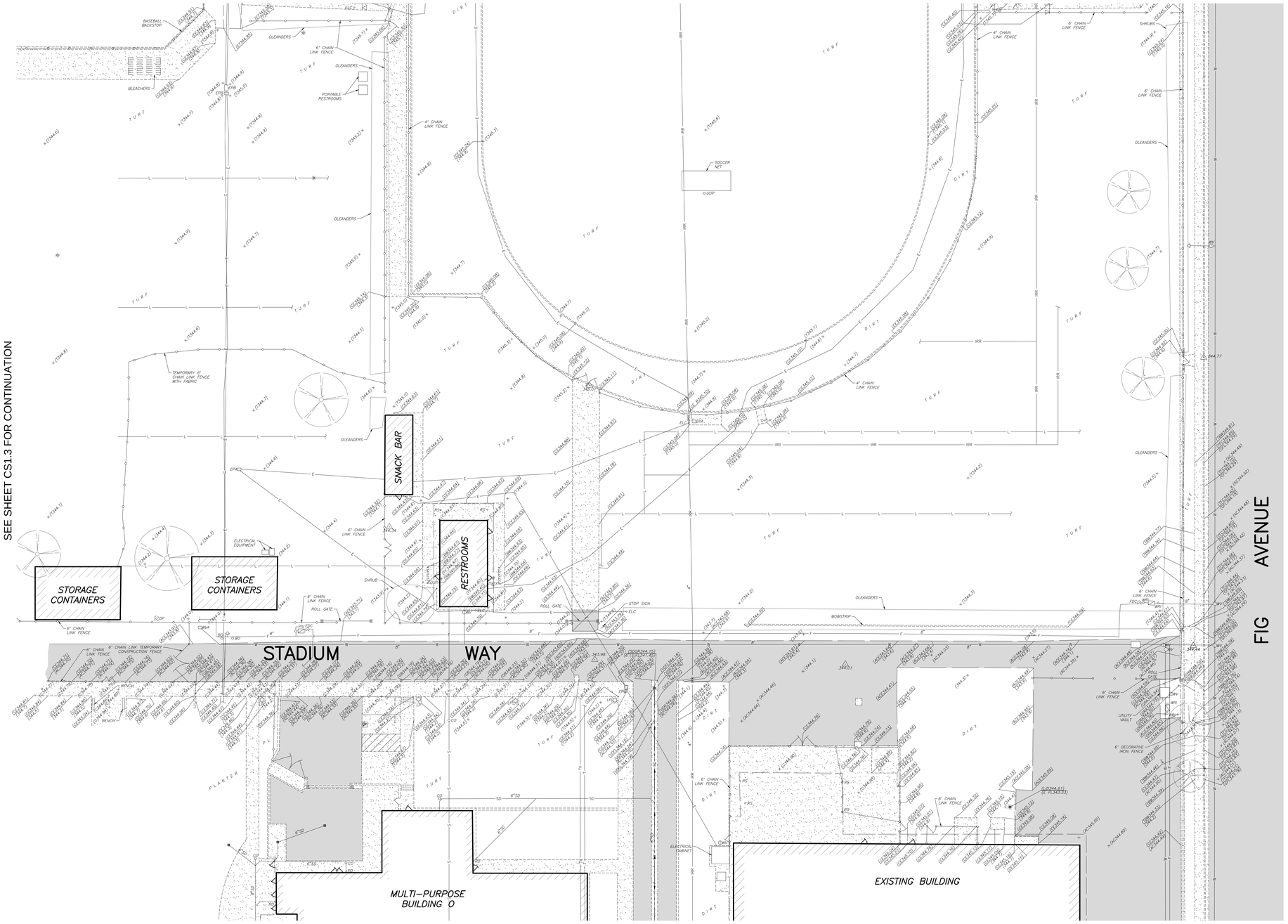

SURVEY NOTES:

1. *THIS TOPOGRAPHIC SURVEY LOCATES SPECIFIC PHYSICAL FEATURES OF THE SITE AND THEIR ELEVATION AS DETERMINED NECESSARY BY THE PROJECT ENGINEER. IT IS NOT A COMPLETE TOPOGRAPHIC SURVEY OF THE SITE. THE INFORMATION SHOWN REFLECTS THE DATA OBTAINED BY FIELD SURVEY CONDUCTED ON 02/06/2025 AND 01/05/2026.*
2. *UTILITY INFORMATION SHOWN HEREON IS BASED ON RECORD INFORMATION SUPPLIED TO THE ENGINEER BY UTILITY COMPANIES, PUBLIC AGENCIES AND THE PROPERTY OWNER, TOGETHER WITH OBSERVATION OF VISIBLE EVIDENCE BY A FIELD SURVEY. THE ENGINEER CAN MAKE NO GUARANTEE AS TO THE ACCURACY OR COMPLETENESS OF THE UNDERGROUND UTILITY FACILITIES SHOWN. PRIOR TO ANY SITE EXCAVATIONS, THE CONTRACTOR SHALL CONTACT THE OWNER AND UNDERGROUND SERVICE ALERT (USA) AND REQUEST THAT THEY IDENTIFY THE LOCATION OF ALL UNDERGROUND UTILITIES AT THE SITE.*

SITE BENCHMARK:

CHISELED "X" ON TOP FACE OF CURB ALONG FIG AVENUE LOCATED APPROXIMATELY 149' SOUTH OF THE EXISTING POWER POLE LOCATED EASTERLY FROM THE NORTHEAST CORNER OF THE EXISTING BLEACHERS

ELEV.= 345.21 USGS DATUM

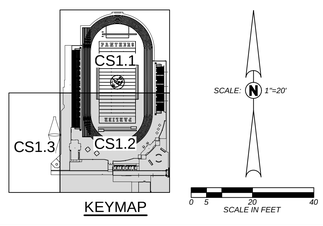

SCALE: N 1"=20'

0 5 20 40
SCALE IN FEET

PBK
FRESNO, CA
559-448-8400
www.pbk.com

PARLIER HS STADIUM REPLACEMENT

CLIENT PROJECT NO.: 250093
DSA SUBMISSION
DSA APPL. NO.: 02-124002 DSA FILE NO.: 10-H12

PARLIER UNIFIED SCHOOL DISTRICT

Blair, Church & Flynn
CONSULTING ENGINEERS

REGISTERED PROFESSIONAL ENGINEER
LANE R. BAKER
No. 47033
CIVIL
STATE OF CALIFORNIA
5-14-26
Date Signed:

CLIENT	
PARLIER UNIFIED SCHOOL DISTRICT	
DATE: 2026/02/09	PROJECT NUMBER: 250093

DRAWING HISTORY

No.	Description	Date

CHECKED BY: GP
DRAWN BY: SD

PARTIAL TOPOGRAPHIC SURVEY

CS1.2

Drawing: P:\224\224-040\Site\ProductionDrawings\224404_TO01.dwg, CS1.2, ----
Plot by: gpinedo Jun 19, 2026 - 5:00pm

PARTIAL TOPOGRAPHIC SURVEY
CS1.3

0"
1"

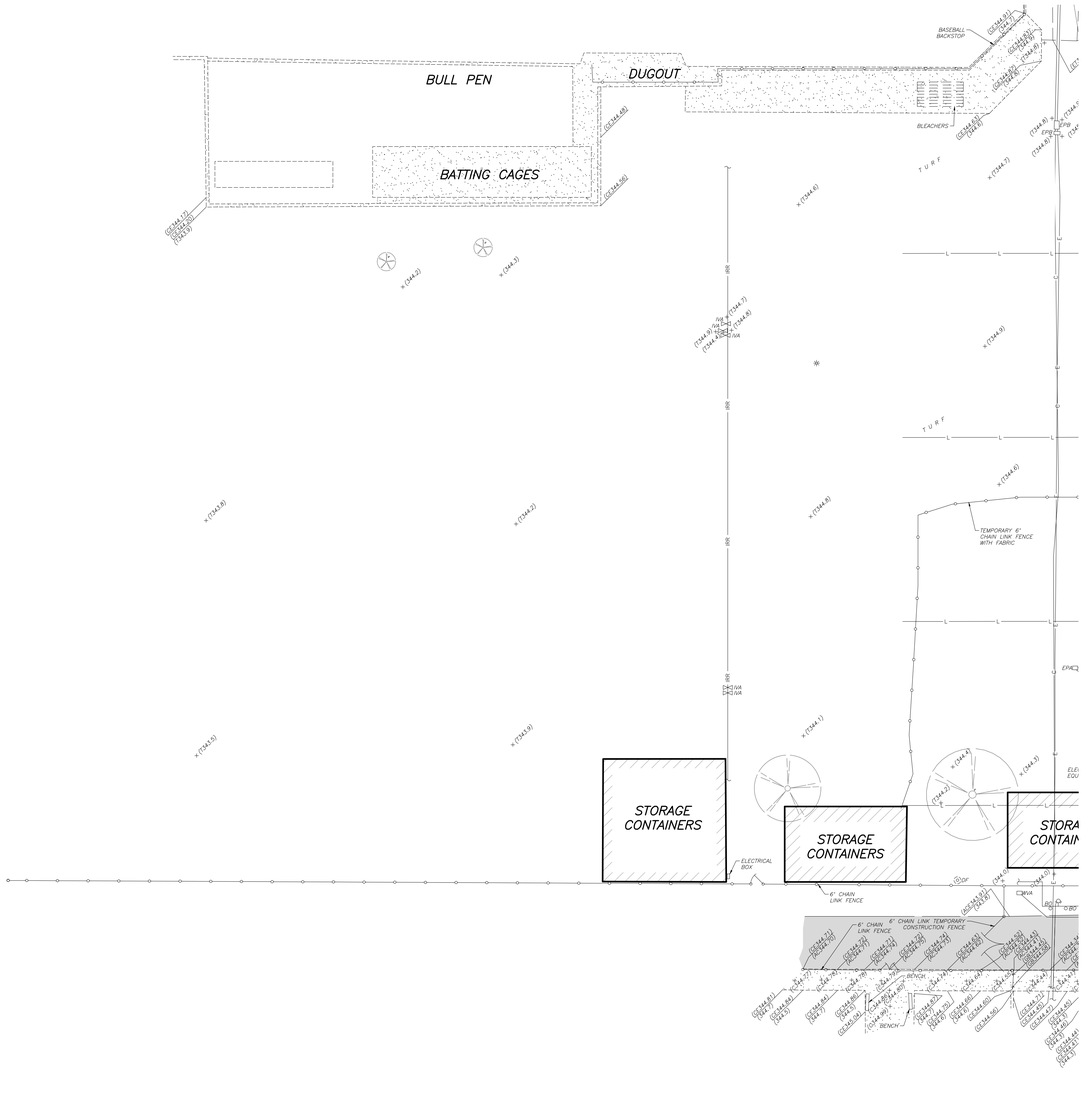

SURVEY NOTES:

1. *THIS TOPOGRAPHIC SURVEY LOCATES SPECIFIC PHYSICAL FEATURES OF THE SITE AND THEIR ELEVATION AS DETERMINED NECESSARY BY THE PROJECT ENGINEER. IT IS NOT A COMPLETE TOPOGRAPHIC SURVEY OF THE SITE. THE INFORMATION SHOWN REFLECTS THE DATA OBTAINED BY FIELD SURVEY CONDUCTED ON 02/06/2025 AND 01/05/2026.*
2. *UTILITY INFORMATION SHOWN HEREON IS BASED ON RECORD INFORMATION SUPPLIED TO THE ENGINEER BY UTILITY COMPANIES, PUBLIC AGENCIES AND THE PROPERTY OWNER, TOGETHER WITH OBSERVATION OF VISIBLE EVIDENCE BY A FIELD SURVEY. THE ENGINEER CAN MAKE NO GUARANTEE AS TO THE ACCURACY OR COMPLETENESS OF THE UNDERGROUND UTILITY FACILITIES SHOWN. PRIOR TO ANY SITE EXCAVATIONS, THE CONTRACTOR SHALL CONTACT THE OWNER AND UNDERGROUND SERVICE ALERT (USA) AND REQUEST THAT THEY IDENTIFY THE LOCATION OF ALL UNDERGROUND UTILITIES AT THE SITE.*

SITE BENCHMARK:

CHISELED "X" ON TOP FACE OF CURB ALONG FIG AVENUE LOCATED APPROXIMATELY 149' SOUTH OF THE EXISTING POWER POLE LOCATED EASTERLY FROM THE NORTHEAST CORNER OF THE EXISTING BLEACHERS

ELEV.= 345.21 USGS DATUM

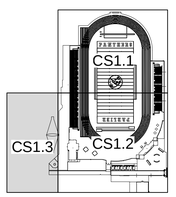

KEYMAP

SCALE: 1"=20'

0 5 20 40
SCALE IN FEET

PBK
www.pbk.com
559-449-8400
FRESNO, CA

PARLIER HS STADIUM REPLACEMENT

603 3rd Street
Parlier, CA 93648

CLIENT PROJECT NO: 250093
DSA SUBMISSION
DSA APPL. NO.: 02-124002 DSA FILE NO.: 10-H12

PARLIER UNIFIED SCHOOL DISTRICT

Blair, Church & Flynn
CONSULTING ENGINEERS

REGISTERED PROFESSIONAL ENGINEER
LANE R. BARTHEL
No. 47033
CIVIL
STATE OF CALIFORNIA

5-14-26
Date Signed

CLIENT	
PARLIER UNIFIED SCHOOL DISTRICT	
DATE: 2026/02/09	PROJECT NUMBER: 250093

DRAWING HISTORY

No.	Description	Date

CHECKED BY: GP

DRAWN BY: SD

PARTIAL TOPOGRAPHIC SURVEY

CS1.3

Drawing: P:\224\224-04045\Site\Production\Drawings\224404_T001.dwg; CS1.3 ----
Plot by: gpineda Jun 19, 2026 - 5:00pm

PARTIAL DEMOLITION PLAN
CS2.1

0"
1"

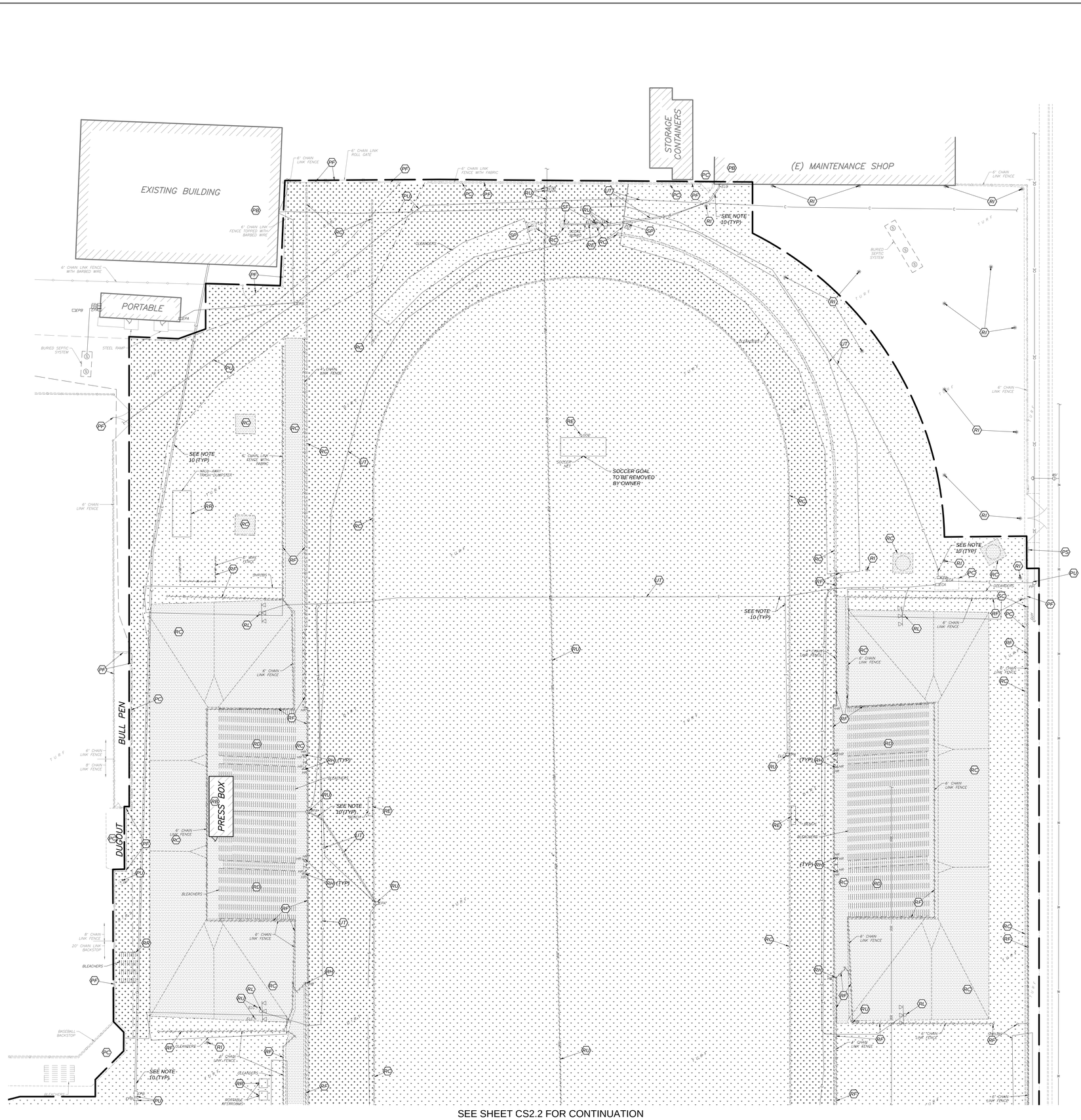

DEMOLITION LEGEND:

- APPROXIMATE LIMITS OF DEMOLITION. REMOVE EXISTING IMPROVEMENTS AS NECESSARY TO CONSTRUCT NEW IMPROVEMENTS SHOWN ON THESE PLANS UNLESS OTHERWISE NOTED ON THE PLAN. THE REMOVAL OF IMPROVEMENTS MUST BE COORDINATED WITH ALL PLAN SHEETS. CONTRACTOR MUST ALSO COORDINATE REMOVAL OF IMPROVEMENTS WITH UTILITY AGENCIES. PROTECT ALL IMPROVEMENTS NOT DESIGNATED FOR REMOVAL. SEE NOTE 1
- LIMITS OF VEGETATION REMOVAL. 4" MINIMUM DEPTH AT PROPOSED HARDSCAPE AREAS. SEE SITE PLAN.
- LIMITS OF DIRT REMOVAL. 4" MINIMUM DEPTH SEE GRADING PLAN
- LIMITS OF CONCRETE IMPROVEMENT REMOVAL
- LIMITS OF ASPHALTIC CONCRETE IMPROVEMENT REMOVAL
- (PA) PROTECT ASPHALT CONCRETE PAVEMENT TO REMAIN
- (PB) PROTECT BUILDING, FOUNDATION AND UTILITIES TO REMAIN
- (PC) PROTECT CONCRETE IMPROVEMENTS TO REMAIN
- (PF) PROTECT FENCE TO REMAIN
- (PR) PROTECT ROOF SUPPORT TO REMAIN
- (PS) PROTECT SIGN TO REMAIN
- (PU) PROTECT UTILITY TO REMAIN
- (RW) REMOVE AND SALVAGE FIRE UTILITIES FOR REINSTALLATION PER UTILITY PLANS
- (RA) REMOVE AND LAWFULLY DISPOSE OF ASPHALT CONCRETE PAVEMENT STRUCTURAL SECTION
- (RB) REMOVE AND LAWFULLY DISPOSE OF BUILDING, FOUNDATION, AND UTILITIES
- (RC) REMOVE AND LAWFULLY DISPOSE OF CONCRETE IMPROVEMENTS
- (RD) REMOVE AND LAWFULLY DISPOSE OF BLEACHERS
- (RE) REMOVE AND SALVAGE ATHLETIC EQUIPMENT TO OWNER
- (RF) REMOVE AND LAWFULLY DISPOSE OF WIRE OR CHAIN LINK FENCE FABRIC, WIRE FENCING, POSTS AND FOOTINGS
- (RH) REMOVE AND LAWFULLY DISPOSE OF HANDRAILS
- (RI) REMOVE AND RETURN IRRIGATION COMPONENTS TO THE DISTRICT
- (RK) REMOVE AND LAWFULLY DISPOSE OF BLOCK WALL
- (RL) REMOVE AND LAWFULLY DISPOSE OF STADIUM LIGHTING; SALVAGE AND RETURN SPEAKER SYSTEMS ON STADIUM LIGHTING TO THE OWNER.
- (RO) REMOVE AND LAWFULLY DISPOSE OF BOLLARD
- (RP) REMOVE AND DISPOSE OF FLAGPOLE
- (RR) REMOVE AND RETURN EQUIPMENT TO OWNER
- (RS) REMOVE AND LAWFULLY DISPOSE OF SIGN AND FOOTING
- (RT) REMOVE AND LAWFULLY DISPOSE OF TREE AND ROOTS
- (RU) REMOVE AND LAWFULLY DISPOSE OF UTILITY
- (SC) SAWCUT
- (SF) REMOVE SCOREBOARD AND SALVAGE LOGO SIGNS. STRUCTURE COLUMNS TO REMAIN. SEE STRUCTURAL PLANS FOR RECONFIGURATION.
- (SP) REMOVE AND SALVAGE FLAGPOLE TO THE OWNER
- (SS) REMOVE AND SALVAGE SIGNAGE TO OWNER
- (SU) SALVAGE UTILITY FOR REINSTALLATION, SEE UTILITY PLAN FOR LOCATION
- (UT) REFER TO GENERAL DEMOLITION NOTE 10 ON THIS SHEET
- REMOVE TREE
- CAP END OF UTILITY LINE
- LIMIT OF CHAIN LINK FENCE REMOVAL
- LIMIT OF WIRE FENCE REMOVAL
- LIMIT OF IRRIGATION MAIN LINE REMOVAL
- LIMIT OF WATER LINE REMOVAL
- LIMIT OF FIRE LINE REMOVAL
- LIMIT OF IRRIGATION LATERAL LINE REMOVAL
- LIMIT OF SEWER LINE REMOVAL

GENERAL DEMOLITION NOTES:

1. THE "LIMIT OF DEMOLITION" SHOWN IS APPROXIMATE AND IS GENERALLY CONSIDERED TO BE THE MINIMUM REMOVAL REQUIREMENTS. CONTRACTOR MUST COORDINATE AS NOTED IN THE LEGEND.
2. CONTRACTOR SHALL LEGALLY DISPOSE OF ALL DEMOLISHED MATERIALS OFF SITE.
3. CONTRACTOR SHALL PROTECT ALL EXISTING UTILITY IMPROVEMENTS NOT SPECIFICALLY DESIGNATED FOR REMOVAL.
4. THE ON-SITE UNDERGROUND UTILITIES SHOWN ON THIS SHEET ARE AT APPROXIMATE LOCATIONS. THE EXTENT, LOCATIONS AND SIZES ARE UNKNOWN. THE CONTRACTOR SHALL POTHOLE TO LOCATE AND VERIFY THE UNDERGROUND UTILITY LINES PRIOR TO REMOVAL.
5. CONTRACTOR TO PROTECT AND PRESERVE IN PLACE ANY FOUND SURVEY MONUMENTS. ANY MONUMENTS DISTURBED SHALL BE RESET BY A CALIFORNIA LICENSED SURVEYOR AND THE APPROPRIATE PAPERWORK FILED WITH THE CITY OR COUNTY, AT CONTRACTOR'S EXPENSE.
6. ALL HAZARDOUS MATERIALS ENCOUNTERED DURING SITE DEMOLITION SHALL BE REMEDIATED AND DISPOSED OF PER STATE AND EPA REQUIREMENTS.
7. CONTRACTOR SHALL CONTACT AND COORDINATE WITH ALL UTILITY AGENCIES PRIOR TO THE START OF ANY DEMOLITION OR CONSTRUCTION.
8. ANY EXISTING UTILITIES AND/OR IMPROVEMENTS WHICH ARE TO REMAIN, THAT BECOME DAMAGED DURING CONSTRUCTION SHALL BE COMPLETELY RESTORED TO THE SATISFACTION OF THE OWNER AND AGENCY HAVING AUTHORITY, AT THE CONTRACTOR'S SOLE EXPENSE.
9. REMOVE EXISTING IMPROVEMENTS AS NECESSARY TO CONSTRUCT NEW IMPROVEMENTS SHOWN ON THESE PLANS.
   a) FOR CONCRETE REMOVAL, REMOVE TO THE NEXT NEAREST TOOLED JOINT OR EXPANSION JOINT OF IMPROVEMENTS DESIGNATED TO REMAIN.
   b) FOR ASPHALTIC PAVEMENT REMOVAL, SAWCUT TO A STRAIGHT, CLEAN EDGE AT LOCATIONS INDICATED ON THE PLANS.
10. REFER TO MECHANICAL, ELECTRICAL, PLUMBING, IRRIGATION, AND ARCHITECTURAL PLANS FOR ADDITIONAL DEMOLITION AND COORDINATION.
11. COMPLIANCE WITH FIRE SAFETY DURING CONSTRUCTION WILL BE ENFORCED.

FIG AVENUE

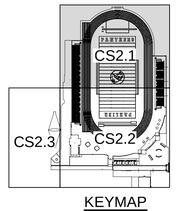

KEYMAP

SCALE: N 1"=20'

0 5 20 40
SCALE IN FEET

811 Know what's below. Call before you dig.

PBK
www.pbk.com
559-449-8400
FRESNO, CA

PARLIER HS STADIUM REPLACEMENT

CLIENT PROJECT NO: 250093
603 3rd Street
Parlier, CA 93648
DSA SUBMISSION
DSA APPL. NO.: 02-124002 DSA FILE NO.: 10-H12

PARLIER UNIFIED SCHOOL DISTRICT

Blair, Church & Flynn CONSULTING ENGINEERS

REGISTERED PROFESSIONAL ENGINEER LANE R. BAZZANELLA No. 47033 CIVIL STATE OF CALIFORNIA
5-14-26
Date Signed:

CLIENT
PARLIER UNIFIED SCHOOL DISTRICT

DATE	PROJECT NUMBER
2026/02/09	250093

DRAWING HISTORY

No.	Description	Date

CHECKED BY: GP
DRAWN BY: SD

PARTIAL DEMOLITION PLAN

CS2.1

Drawing: P:\224\224-0404\Site\Production\Drawings\224404_DE01.dwg, CS2.1 - ----
Plot by: gpinedo Jun 19, 2026 - 5:00pm

PARTIAL DEMOLITION PLAN
CS2.2

0"
1"

SEE SHEET CS2.1 FOR CONTINUATION

SEE SHEET CS2.3 FOR CONTINUATION

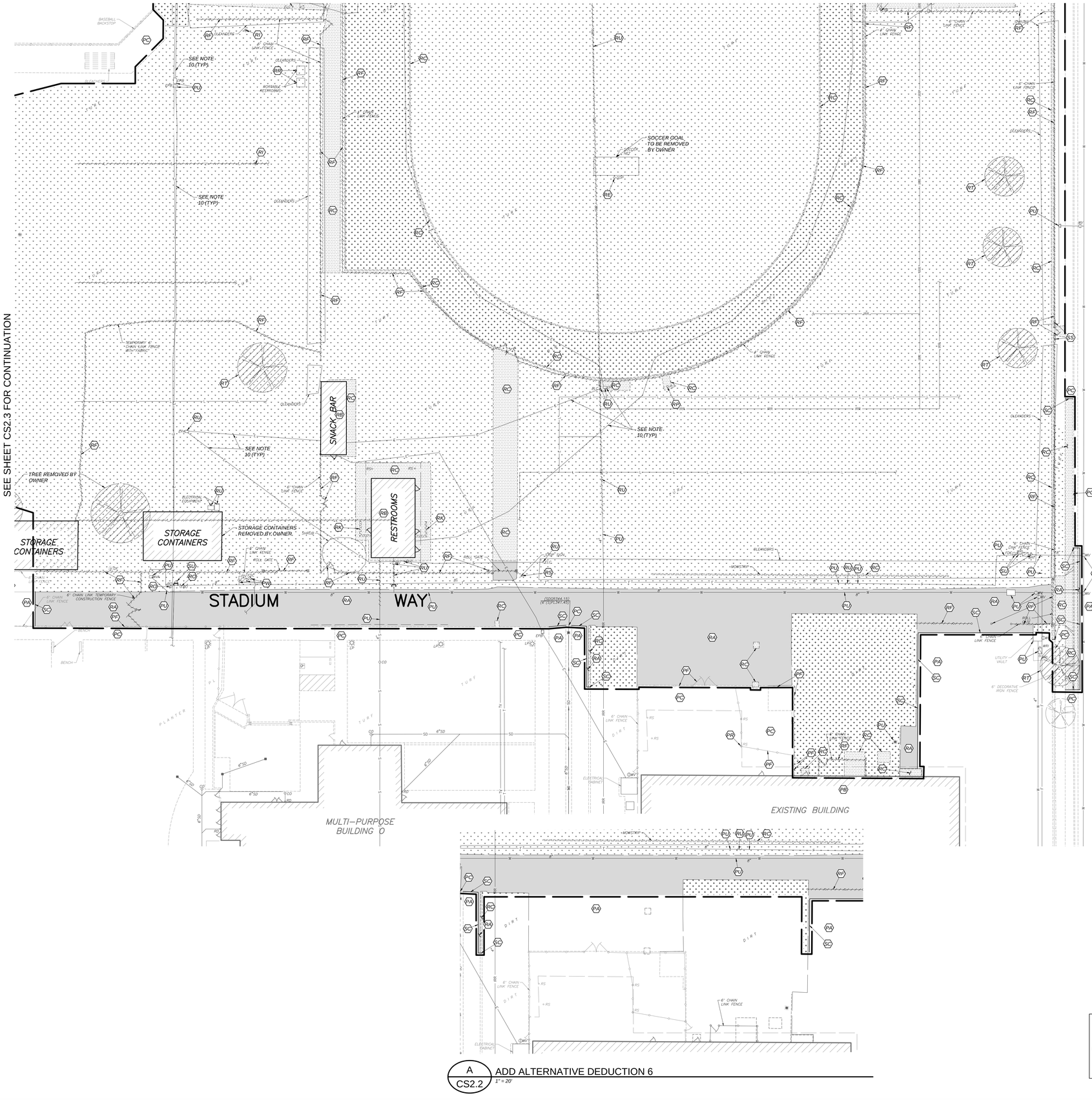

A CS2.2 ADD ALTERNATIVE DEDUCTION 6
1" = 20'

FIG AVENUE

DEMOLITION LEGEND:

- APPROXIMATE LIMITS OF DEMOLITION. REMOVE EXISTING IMPROVEMENTS AS NECESSARY TO CONSTRUCT NEW IMPROVEMENTS SHOWN ON THESE PLANS UNLESS OTHERWISE NOTED ON THE PLAN. THE REMOVAL OF IMPROVEMENTS MUST BE COORDINATED WITH ALL PLAN SHEETS. CONTRACTOR MUST ALSO COORDINATE REMOVAL OF IMPROVEMENTS WITH UTILITY AGENCIES. PROTECT ALL IMPROVEMENTS NOT DESIGNATED FOR REMOVAL. SEE NOTE 1
- LIMITS OF VEGETATION REMOVAL. 4" MINIMUM DEPTH AT PROPOSED HARDSCAPE AREAS. SEE SITE PLAN.
- LIMITS OF DIRT REMOVAL. 4" MINIMUM DEPTH SEE GRADING PLAN
- LIMITS OF CONCRETE IMPROVEMENT REMOVAL
- LIMITS OF ASPHALTIC CONCRETE IMPROVEMENT REMOVAL
- (PA) PROTECT ASPHALT CONCRETE PAVEMENT TO REMAIN
- (PB) PROTECT BUILDING, FOUNDATION AND UTILITIES TO REMAIN
- (PC) PROTECT CONCRETE IMPROVEMENTS TO REMAIN
- (PF) PROTECT FENCE TO REMAIN
- (PR) PROTECT ROOF SUPPORT TO REMAIN
- (PS) PROTECT SIGN TO REMAIN
- (PU) PROTECT UTILITY TO REMAIN
- (RW) REMOVE AND SALVAGE FIRE UTILITIES FOR REINSTALLATION PER UTILITY PLANS
- (RA) REMOVE AND LAWFULLY DISPOSE OF ASPHALT CONCRETE PAVEMENT STRUCTURAL SECTION
- (RB) REMOVE AND LAWFULLY DISPOSE OF BUILDING, FOUNDATION, AND UTILITIES
- (RC) REMOVE AND LAWFULLY DISPOSE OF CONCRETE IMPROVEMENTS
- (RD) REMOVE AND LAWFULLY DISPOSE OF BLEACHERS
- (RE) REMOVE AND SALVAGE ATHLETIC EQUIPMENT TO OWNER
- (RF) REMOVE AND LAWFULLY DISPOSE OF WIRE OR CHAIN LINK FENCE FABRIC, WIRE FENCING, POSTS AND FOOTINGS
- (RH) REMOVE AND LAWFULLY DISPOSE OF HANDRAILS
- (RI) REMOVE AND RETURN IRRIGATION COMPONENTS TO THE DISTRICT
- (RK) REMOVE AND LAWFULLY DISPOSE OF BLOCK WALL
- (RL) REMOVE AND LAWFULLY DISPOSE OF STADIUM LIGHTING; SALVAGE AND RETURN SPEAKER SYSTEMS ON STADIUM LIGHTING TO THE OWNER.
- (RO) REMOVE AND LAWFULLY DISPOSE OF BOLLARD
- (RP) REMOVE AND DISPOSE OF FLAGPOLE
- (RR) REMOVE AND RETURN EQUIPMENT TO OWNER
- (RS) REMOVE AND LAWFULLY DISPOSE OF SIGN AND FOOTING
- (RT) REMOVE AND LAWFULLY DISPOSE OF TREE AND ROOTS
- (RU) REMOVE AND LAWFULLY DISPOSE OF UTILITY
- (SC) SAWCUT
- (SF) REMOVE SCOREBOARD AND SALVAGE LOGO SIGNS. STRUCTURE COLUMNS TO REMAIN. SEE STRUCTURAL PLANS FOR RECONFIGURATION.
- (SP) REMOVE AND SALVAGE FLAGPOLE TO THE OWNER
- (SS) REMOVE AND SALVAGE SIGNAGE TO OWNER
- (SU) SALVAGE UTILITY FOR REINSTALLATION, SEE UTILITY PLAN FOR LOCATION
- (UT) REFER TO GENERAL DEMOLITION NOTE 10 ON THIS SHEET
- REMOVE TREE
- CAP END OF UTILITY LINE
- LIMIT OF CHAIN LINK FENCE REMOVAL
- LIMIT OF WIRE FENCE REMOVAL
- LIMIT OF IRRIGATION MAIN LINE REMOVAL
- LIMIT OF WATER LINE REMOVAL
- LIMIT OF FIRE LINE REMOVAL
- LIMIT OF IRRIGATION LATERAL LINE REMOVAL
- LIMIT OF SEWER LINE REMOVAL

GENERAL DEMOLITION NOTES:

1. THE "LIMIT OF DEMOLITION" SHOWN IS APPROXIMATE AND IS GENERALLY CONSIDERED TO BE THE MINIMUM REMOVAL REQUIREMENTS. CONTRACTOR MUST COORDINATE AS NOTED IN THE LEGEND.
2. CONTRACTOR SHALL LEGALLY DISPOSE OF ALL DEMOLISHED MATERIALS OFF SITE.
3. CONTRACTOR SHALL PROTECT ALL EXISTING UTILITY IMPROVEMENTS NOT SPECIFICALLY DESIGNATED FOR REMOVAL.
4. THE ON-SITE UNDERGROUND UTILITIES SHOWN ON THIS SHEET ARE AT APPROXIMATE LOCATIONS. THE EXTENT, LOCATIONS AND SIZES ARE UNKNOWN. THE CONTRACTOR SHALL POTHOLE TO LOCATE AND VERIFY THE UNDERGROUND UTILITY LINES PRIOR TO REMOVAL.
5. CONTRACTOR TO PROTECT AND PRESERVE IN PLACE ANY FOUND SURVEY MONUMENTS. ANY MONUMENTS DISTURBED SHALL BE RESET BY A CALIFORNIA LICENSED SURVEYOR AND THE APPROPRIATE PAPERWORK FILED WITH THE CITY OR COUNTY, AT CONTRACTOR'S EXPENSE.
6. ALL HAZARDOUS MATERIALS ENCOUNTERED DURING SITE DEMOLITION SHALL BE REMEDIATED AND DISPOSED OF PER STATE AND EPA REQUIREMENTS.
7. CONTRACTOR SHALL CONTACT AND COORDINATE WITH ALL UTILITY AGENCIES PRIOR TO THE START OF ANY DEMOLITION OR CONSTRUCTION.
8. ANY EXISTING UTILITIES AND/OR IMPROVEMENTS WHICH ARE TO REMAIN, THAT BECOME DAMAGED DURING CONSTRUCTION SHALL BE COMPLETELY RESTORED TO THE SATISFACTION OF THE OWNER AND AGENCY HAVING AUTHORITY, AT THE CONTRACTOR'S SOLE EXPENSE.
9. REMOVE EXISTING IMPROVEMENTS AS NECESSARY TO CONSTRUCT NEW IMPROVEMENTS SHOWN ON THESE PLANS.
   a) FOR CONCRETE REMOVAL, REMOVE TO THE NEXT NEAREST TOOLED JOINT OR EXPANSION JOINT OF IMPROVEMENTS DESIGNATED TO REMAIN.
   b) FOR ASPHALTIC PAVEMENT REMOVAL, SAWCUT TO A STRAIGHT, CLEAN EDGE AT LOCATIONS INDICATED ON THE PLANS.
10. REFER TO MECHANICAL, ELECTRICAL, PLUMBING, IRRIGATION, AND ARCHITECTURAL PLANS FOR ADDITIONAL DEMOLITION AND COORDINATION.
11. COMPLIANCE WITH FIRE SAFETY DURING CONSTRUCTION WILL BE ENFORCED.

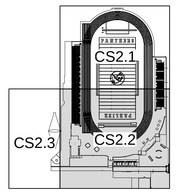

KEYMAP

SCALE: N 1"=20'

0 5 20 40
SCALE IN FEET

811 Know what's below. Call before you dig.

PBK
www.pbk.com
559-449-8400
FRESNO, CA

PARLIER HS STADIUM REPLACEMENT

CLIENT PROJECT NO.: 250093
603 3rd Street
Parlier, CA 93648
DSA SUBMISSION
DSA APPL. NO.: 02-124002 DSA FILE NO.: 10-H12

PARLIER UNIFIED SCHOOL DISTRICT

Blair, Church & Flynn
CONSULTING ENGINEERS

REGISTERED PROFESSIONAL ENGINEER
LANE R. BAXTER
No. 47033
CIVIL
STATE OF CALIFORNIA

5-14-26
Date Signed:

CLIENT	
PARLIER UNIFIED SCHOOL DISTRICT	
DATE	PROJECT NUMBER
2026/02/09	250093

DRAWING HISTORY

No.	Description	Date

CHECKED BY: GP

DRAWN BY: SD

PARTIAL DEMOLITION PLAN

CS2.2

Drawing: P:\224\224-040\Site\ProductionDrawings\224404_DE01.dwg, CS2.2 - ----
Plot by: gpinedo Jun 19, 2026 - 5:00pm

PARTIAL DEMOLITION PLAN
CS2.3

0" 1"

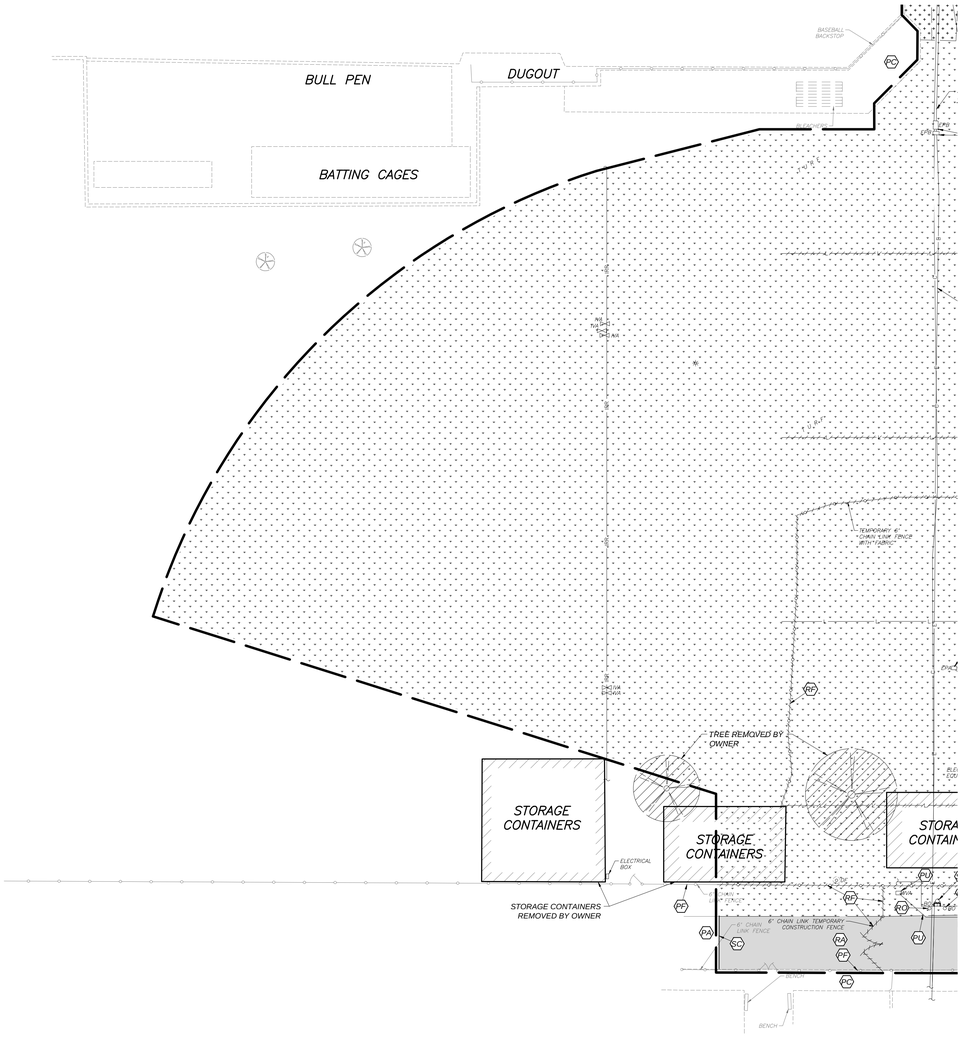

SEE SHEET CS2.2 FOR CONTINUATION

DEMOLITION LEGEND:

- APPROXIMATE LIMITS OF DEMOLITION. REMOVE EXISTING IMPROVEMENTS AS NECESSARY TO CONSTRUCT NEW IMPROVEMENTS SHOWN ON THESE PLANS UNLESS OTHERWISE NOTED ON THE PLAN. THE REMOVAL OF IMPROVEMENTS MUST BE COORDINATED WITH ALL PLAN SHEETS. CONTRACTOR MUST ALSO COORDINATE REMOVAL OF IMPROVEMENTS WITH UTILITY AGENCIES. PROTECT ALL IMPROVEMENTS NOT DESIGNATED FOR REMOVAL. SEE NOTE 1
- LIMITS OF VEGETATION REMOVAL. 4" MINIMUM DEPTH AT PROPOSED HARDSCAPE AREAS. SEE SITE PLAN.
- LIMITS OF DIRT REMOVAL. 4" MINIMUM DEPTH SEE GRADING PLAN
- LIMITS OF CONCRETE IMPROVEMENT REMOVAL
- LIMITS OF ASPHALTIC CONCRETE IMPROVEMENT REMOVAL
- (PA) PROTECT ASPHALT CONCRETE PAVEMENT TO REMAIN
- (PB) PROTECT BUILDING, FOUNDATION AND UTILITIES TO REMAIN
- (PC) PROTECT CONCRETE IMPROVEMENTS TO REMAIN
- (PF) PROTECT FENCE TO REMAIN
- (PR) PROTECT ROOF SUPPORT TO REMAIN
- (PS) PROTECT SIGN TO REMAIN
- (PU) PROTECT UTILITY TO REMAIN
- (PW) REMOVE AND SALVAGE FIRE UTILITIES FOR REINSTALLATION PER UTILITY PLANS
- (RA) REMOVE AND LAWFULLY DISPOSE OF ASPHALT CONCRETE PAVEMENT STRUCTURAL SECTION
- (RB) REMOVE AND LAWFULLY DISPOSE OF BUILDING, FOUNDATION, AND UTILITIES
- (RC) REMOVE AND LAWFULLY DISPOSE OF CONCRETE IMPROVEMENTS
- (RD) REMOVE AND LAWFULLY DISPOSE OF BLEACHERS
- (RE) REMOVE AND SALVAGE ATHLETIC EQUIPMENT TO OWNER
- (RF) REMOVE AND LAWFULLY DISPOSE OF WIRE OR CHAIN LINK FENCE FABRIC, WIRE FENCING, POSTS AND FOOTINGS
- (RH) REMOVE AND LAWFULLY DISPOSE OF HANDRAILS
- (RI) REMOVE AND RETURN IRRIGATION COMPONENTS TO THE DISTRICT
- (RK) REMOVE AND LAWFULLY DISPOSE OF BLOCK WALL
- (RL) REMOVE AND LAWFULLY DISPOSE OF STADIUM LIGHTING. SALVAGE AND RETURN SPEAKER SYSTEMS ON STADIUM LIGHTING TO THE OWNER.
- (RO) REMOVE AND LAWFULLY DISPOSE OF BOLLARD
- (RP) REMOVE AND DISPOSE OF FLAGPOLE
- (RR) REMOVE AND RETURN EQUIPMENT TO OWNER
- (RS) REMOVE AND LAWFULLY DISPOSE OF SIGN AND FOOTING
- (RT) REMOVE AND LAWFULLY DISPOSE OF TREE AND ROOTS
- (RU) REMOVE AND LAWFULLY DISPOSE OF UTILITY
- (SC) SAWCUT
- (SF) REMOVE SCOREBOARD AND SALVAGE LOGO SIGNS. STRUCTURE COLUMNS TO REMAIN. SEE STRUCTURAL PLANS FOR RECONFIGURATION.
- (SP) REMOVE AND SALVAGE FLAGPOLE TO THE OWNER
- (SS) REMOVE AND SALVAGE SIGNAGE TO OWNER
- (SU) SALVAGE UTILITY FOR REINSTALLATION, SEE UTILITY PLAN FOR LOCATION
- (UT) REFER TO GENERAL DEMOLITION NOTE 10 ON THIS SHEET
- REMOVE TREE
- CAP END OF UTILITY LINE
- LIMIT OF CHAIN LINK FENCE REMOVAL
- LIMIT OF WIRE FENCE REMOVAL
- LIMIT OF IRRIGATION MAIN LINE REMOVAL
- LIMIT OF WATER LINE REMOVAL
- LIMIT OF FIRE LINE REMOVAL
- LIMIT OF IRRIGATION LATERAL LINE REMOVAL
- LIMIT OF SEWER LINE REMOVAL

GENERAL DEMOLITION NOTES:

1. THE "LIMIT OF DEMOLITION" SHOWN IS APPROXIMATE AND IS GENERALLY CONSIDERED TO BE THE MINIMUM REMOVAL REQUIREMENTS. CONTRACTOR MUST COORDINATE AS NOTED IN THE LEGEND.
2. CONTRACTOR SHALL LEGALLY DISPOSE OF ALL DEMOLISHED MATERIALS OFF SITE.
3. CONTRACTOR SHALL PROTECT ALL EXISTING UTILITY IMPROVEMENTS NOT SPECIFICALLY DESIGNATED FOR REMOVAL.
4. THE ON-SITE UNDERGROUND UTILITIES SHOWN ON THIS SHEET ARE AT APPROXIMATE LOCATIONS. THE EXTENT, LOCATIONS AND SIZES ARE UNKNOWN. THE CONTRACTOR SHALL POTHOLE TO LOCATE AND VERIFY THE UNDERGROUND UTILITY LINES PRIOR TO REMOVAL.
5. CONTRACTOR TO PROTECT AND PRESERVE IN PLACE ANY FOUND SURVEY MONUMENTS. ANY MONUMENTS DISTURBED SHALL BE RESET BY A CALIFORNIA LICENSED SURVEYOR AND THE APPROPRIATE PAPERWORK FILED WITH THE CITY OR COUNTY, AT CONTRACTOR'S EXPENSE.
6. ALL HAZARDOUS MATERIALS ENCOUNTERED DURING SITE DEMOLITION SHALL BE REMEDIATED AND DISPOSED OF PER STATE AND EPA REQUIREMENTS.
7. CONTRACTOR SHALL CONTACT AND COORDINATE WITH ALL UTILITY AGENCIES PRIOR TO THE START OF ANY DEMOLITION OR CONSTRUCTION.
8. ANY EXISTING UTILITIES AND/OR IMPROVEMENTS WHICH ARE TO REMAIN, THAT BECOME DAMAGED DURING CONSTRUCTION SHALL BE COMPLETELY RESTORED TO THE SATISFACTION OF THE OWNER AND AGENCY HAVING AUTHORITY, AT THE CONTRACTOR'S SOLE EXPENSE.
9. REMOVE EXISTING IMPROVEMENTS AS NECESSARY TO CONSTRUCT NEW IMPROVEMENTS SHOWN ON THESE PLANS.
   a) FOR CONCRETE REMOVAL, REMOVE TO THE NEXT NEAREST TOOLED JOINT OR EXPANSION JOINT OF IMPROVEMENTS DESIGNATED TO REMAIN.
   b) FOR ASPHALTIC PAVEMENT REMOVAL, SAWCUT TO A STRAIGHT, CLEAN EDGE AT LOCATIONS INDICATED ON THE PLANS.
10. REFER TO MECHANICAL, ELECTRICAL, PLUMBING, IRRIGATION, AND ARCHITECTURAL PLANS FOR ADDITIONAL DEMOLITION AND COORDINATION.
11. COMPLIANCE WITH FIRE SAFETY DURING CONSTRUCTION WILL BE ENFORCED.

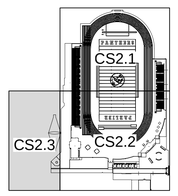

KEYMAP

SCALE: N 1"=20'

0 5 20 40
SCALE IN FEET

811 Know what's below. Call before you dig.

PBK
www.pbk.com
559-448-8400
FRESNO, CA

PARLIER HS STADIUM REPLACEMENT

CLIENT PROJECT NO: 250093
DSA SUBMISSION
DSA APPL. NO.: 02-124002 DSA FILE NO.: 10-H12

PARLIER UNIFIED SCHOOL DISTRICT

Blair, Church & Flynn
CONSULTING ENGINEERS

REGISTERED PROFESSIONAL ENGINEER
LANE R. BAXTER
No. 47033
CIVIL
STATE OF CALIFORNIA
5-14-26
Date Signed:

CLIENT	
PARLIER UNIFIED SCHOOL DISTRICT	
DATE	PROJECT NUMBER
2026/02/09	250093

DRAWING HISTORY

No.	Description	Date

CHECKED BY: GP
DRAWN BY: SD

PARTIAL DEMOLITION PLAN

CS2.3

Drawing: P:\224\224-040\Site\Production\Drawings\224404_DE01.dwg, CS2.3 - ----
Plot by: gpinedo Jun 19, 2026 - 5:00pm

PARTIAL SITE PLAN
CS3.1

0"
1"

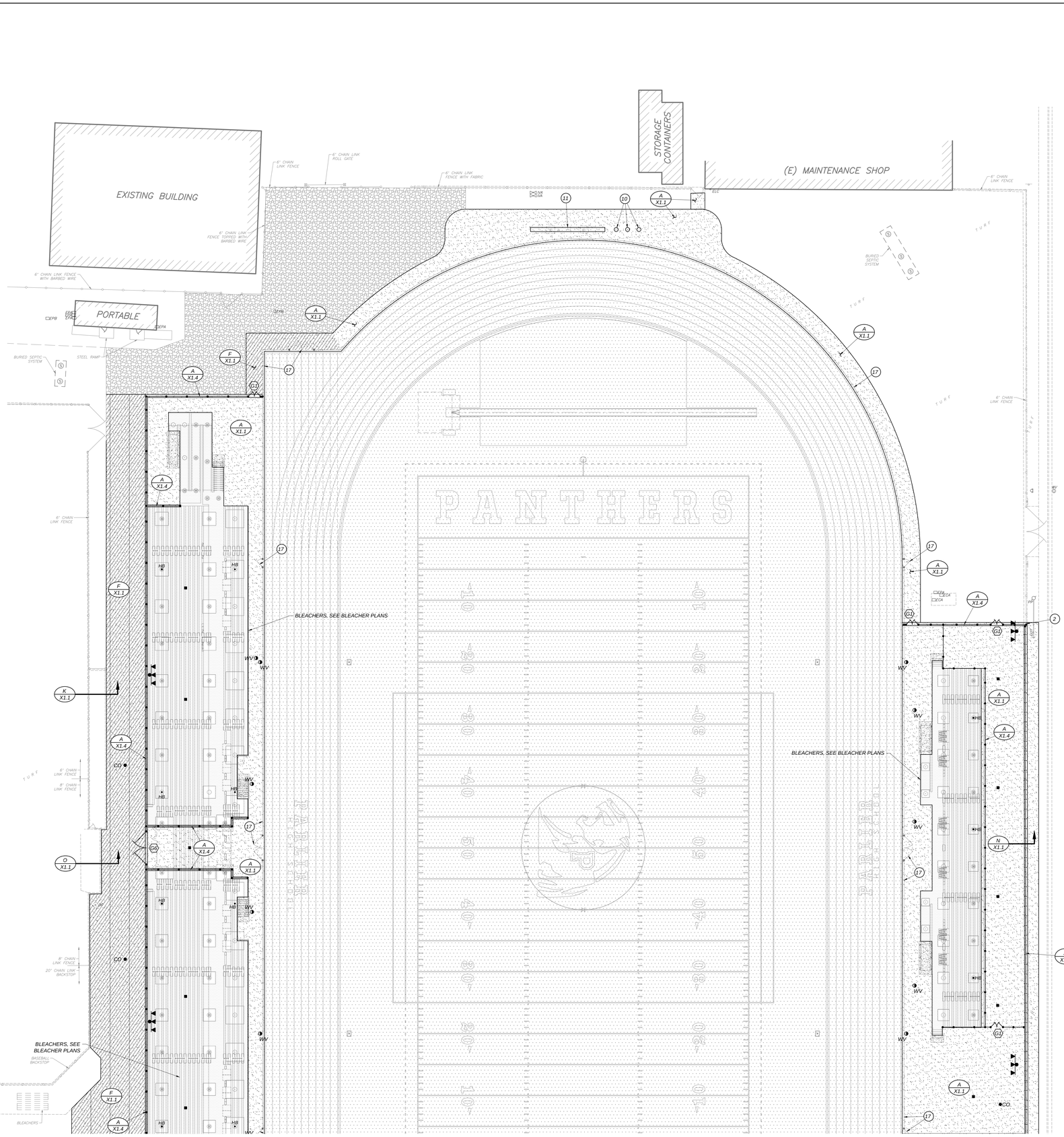

SITE LEGEND:

- LIMITS OF CONCRETE IMPROVEMENTS
- LIMITS OF HEAVY DUTY CONCRETE IMPROVEMENTS
- LIMITS OF CRUSHED ROCK DRIVE IMPROVEMENTS PER DETAIL [E/X1.1]
- LIMITS OF REGULAR DUTY ASPHALTIC CONCRETE PAVEMENT STRUCTURAL SECTION PER DETAIL [B/X1.1]
- LIMITS OF HEAVY DUTY ASPHALTIC CONCRETE PAVEMENT STRUCTURAL SECTION PER DETAIL [B/X1.1]
- LIMITS OF ASPHALT PLUG IMPROVEMENTS
- DETECTABLE WARNING SURFACE PER DETAIL [E/X1.2]
- LIMITS OF DECOMPOSED GRANITE [K/X1.4]
- SEE ARCHITECTURAL PLANS FOR TRACK AND FIELD IMPROVEMENTS
- LIMITS OF PAINTED CURB
- BO — BOLLARD PER DETAIL [H/X1.1]
- DBO — DECORATIVE BOLLARD - SEE ELECTRICAL PLAN
- PL — PLANTER
- SITE LIGHTING - SEE ELECTRICAL PLANS
- (1) BUILDING OVERHANG, SEE ARCHITECTURAL PLANS
- (2) INSTALL 6' CHAIN LINK FENCE POST PER DETAIL [A/X1.4] AND CONNECT TO POST
- (3) ATHLETIC EQUIPMENT, SEE ARCHITECTURAL PLANS
- (4) PAINT TOP AND FACE OF CURB RED WITH 4" HIGH WHITE LETTERING, "NO PARKING - FIRE LANE", AT 30' MAX ON CENTER. WHERE NO CURB EXISTS, PAINT ASPHALT
- (5) PILASTER COLUMNS WITH ENTRANCE SIGNAGE, SEE STRUCTURAL PLANS
- (6) DRIVE APPROACH PER CITY OF PARLIER STD. DWG. ST-16
- (7) SIDEWALK, CURB AND GUTTER PER CITY OF PARLIER STD. DWG. ST-11A AND ST-12
- (8) CONCRETE SEAT WALLS, SEE ARCHITECTURAL PLANS
- (9) PARLIER HIGH SCHOOL LOGO, SEE ARCHITECTURAL PLANS
- (10) FLAGPOLE, SEE ARCHITECTURAL PLANS
- (11) SCOREBOARD, SEE ARCHITECTURAL PLANS
- (12) CONNECT NEW FENCING TO EXISTING POST SIMILAR TO DETAIL [A/X1.5]
- (13) PROVIDE 4" (MAX) SEPARATION FROM POST OR CMU WALLS TO BUILDING PER DETAIL [A/X1.3]
- (14) KNOX BOX LOCATION PER DETAIL [L/X1.1]
- (15) SEE ARCHITECTURAL PLANS FOR CMU WALL AND GATE
- (16) SEE ARCHITECTURAL PLANS FOR CONCRETE WALL
- (17) SEE ARCHITECTURAL PLANS FOR TRACK HEADER AND FENCING IMPROVEMENTS
- (18) BUILDING ENTRY GATES, SEE ARCHITECTURAL PLANS
- (19) PAINT 4" WIDE WHITE BORDER AND 4" WHITE STRIPES AT 3' ON CENTER

GENERAL SITE NOTES:

1. ALL CONCRETE MOWSTRIPS, RAMPS AND SIDEWALKS SHALL HAVE WEAKENED PLANE JOINTS AT 10 FEET MAXIMUM ON CENTER AND EXPANSION JOINTS AT 30 FEET MAXIMUM ON CENTER PER DETAIL [A/X1.1]
2. INSTALL DOWELED CONNECTION AT JOINT OF NEW CONCRETE TO EXISTING CONCRETE PER DETAIL [C/X1.1]
3. NO CONCRETE MAY BE POURED UNTIL THE FORMS HAVE BEEN REVIEWED AND APPROVED BY THE PROJECT INSPECTOR.
4. ALL BURIED METALLIC OBJECTS SHALL HAVE A PROTECTIVE COATING OR BE WRAPPED WITH APPROVED PROTECTIVE WRAP.
5. ADJUST EXISTING SPRINKLER HEADS AND LATERAL LINES AS REQUIRED BY NEW IMPROVEMENTS, OR AS SHOWN ON THE IRRIGATION PLANS.
6. 2 WORKING DAYS BEFORE COMMENCING EXCAVATION OPERATIONS WITHIN THE STREET RIGHT-OF-WAY AND/OR UTILITY EASEMENTS, ALL EXISTING UNDERGROUND FACILITIES SHALL HAVE BEEN LOCATED BY UNDERGROUND SERVICES ALERT (USA). CALL 1-800-642-2444
7. ANY SURVEY MONUMENTS WITHIN THE AREA OF CONSTRUCTION SHALL BE PRESERVED OR RESET BY A PERSON LICENSED TO PRACTICE LAND SURVEYING IN THE STATE OF CALIFORNIA. REPLACEMENT TO BE AT CONTRACTOR'S SOLE EXPENSE.
8. REPAIR ALL DAMAGED AND/OR OFF-GRADE CONCRETE STREET IMPROVEMENTS AS DETERMINED BY THE AGENCY HAVING JURISDICTION PRIOR TO OCCUPANCY
9. OBTAIN ALL REQUIRED PERMITS AND APPROVALS FROM AGENCY HAVING JURISDICTION FOR WORK WITHIN THE PUBLIC RIGHT OF WAY

FIG AVENUE

GATE SCHEDULE:

GATE ID	REFERENCE DETAIL	GATE FUNCTION	ACCESS	FIRE ACCESS
G1	[A/X1.5]	DOUBLE LEAF CHAIN LINK MAINTENANCE GATE	LOCKABLE FORK LATCH	N/A
G2	[A/X1.5]	SINGLE LEAF CHAIN LINK MAINTENANCE SWING GATE	LOCKABLE FORK LATCH	N/A
G3	[A/X1.3]	DECORATIVE METAL FIRE ACCESS ROLLING GATE	KNOX PADLOCK AND KNOX BOX PER CITY OF PARLIER FIRE DEPARTMENT REQUIREMENTS	YES
G4	[A/X1.3]	DOUBLE LEAF DECORATIVE METAL ACCESSIBLE PEDESTRIAN GATE	ADA/CBC ACCESSIBLE PANIC HARDWARE, AND RHODES STYLE LEVER HANDLE	N/A
G5	[A/X1.3]	DOUBLE LEAF DECORATIVE METAL MAINTENANCE SWING GATE	LOCKABLE FORK LATCH	N/A
G6	[A/X1.4]	DOUBLE LEAF SLATTED CHAIN LINK ACCESSIBLE PEDESTRIAN GATE	LOCKABLE FORK LATCH	N/A

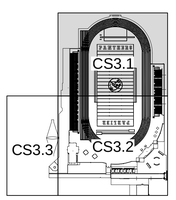

KEYMAP

SCALE: N 1"=20'

0 5 20 40
SCALE IN FEET

811 Know what's below. Call before you dig.

PBK
www.pbk.com
559-449-8400
FRESNO, CA

PARLIER HS STADIUM REPLACEMENT

603 3rd Street
Parlier, CA 93648

CLIENT PROJECT NO: 250093
DSA SUBMISSION
DSA APPL. NO.: 02-124002 DSA FILE NO.: 10-H12

PARLIER UNIFIED SCHOOL DISTRICT

Blair, Church & Flynn
CONSULTING ENGINEERS

REGISTERED PROFESSIONAL ENGINEER
LANE R. BARTLETT
No. 47033
CIVIL
STATE OF CALIFORNIA
5-14-26
Date Signed

CLIENT	
PARLIER UNIFIED SCHOOL DISTRICT	
DATE	PROJECT NUMBER
2026/02/09	250093

DRAWING HISTORY

No.	Description	Date

CHECKED BY: GP

DRAWN BY: SD

PARTIAL SITE PLAN

CS3.1

Drawing: P:\224\224-0404\SitePlan\Drawings\224404_S01.dwg, CS3.1 - ----
Plot by: gpinedo Jun 19, 2026 - 5:00pm

PARTIAL SITE PLAN
CS3.2

0" 1"

SEE SHEET CS3.1 FOR CONTINUATION

SEE SHEET CS3.3 FOR CONTINUATION

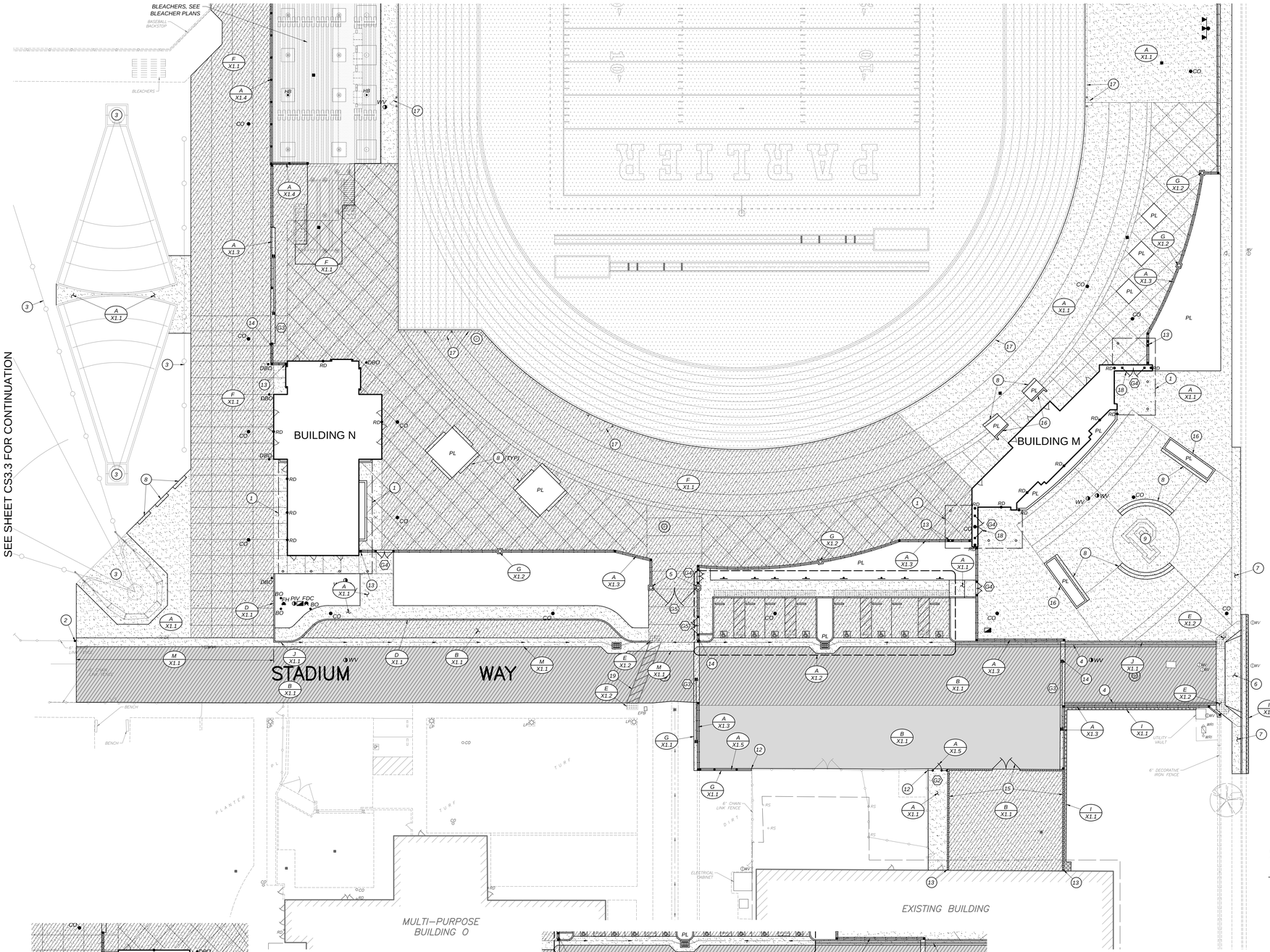

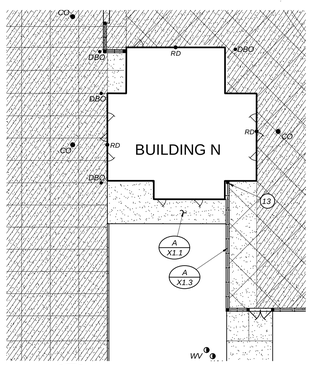

A CS3.2 ADD ALTERNATIVE DEDUCTION 3
1" = 20'

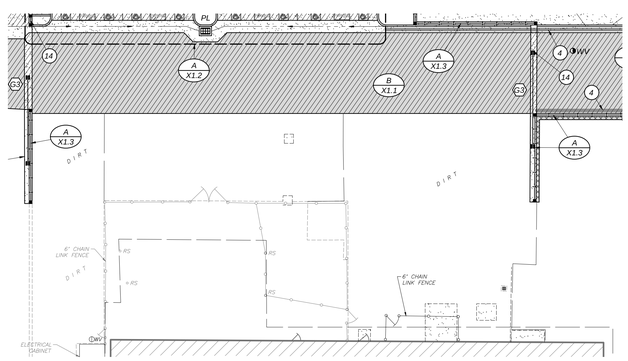

B CS3.2 ADD ALTERNATIVE DEDUCTION 6
1" = 20'

SITE LEGEND:

- LIMITS OF CONCRETE IMPROVEMENTS
- LIMITS OF HEAVY DUTY CONCRETE IMPROVEMENTS
- LIMITS OF CRUSHED ROCK DRIVE IMPROVEMENTS PER DETAIL [E/X1.1]
- LIMITS OF REGULAR DUTY ASPHALTIC CONCRETE PAVEMENT STRUCTURAL SECTION PER DETAIL [B/X1.1]
- LIMITS OF HEAVY DUTY ASPHALTIC CONCRETE PAVEMENT STRUCTURAL SECTION PER DETAIL [B/X1.1]
- LIMITS OF ASPHALT PLUG IMPROVEMENTS
- DETECTABLE WARNING SURFACE PER DETAIL [E/X1.2]
- LIMITS OF DECOMPOSED GRANITE [K/X1.4]
- SEE ARCHITECTURAL PLANS FOR TRACK AND FIELD IMPROVEMENTS
- LIMITS OF PAINTED CURB
- BO — BOLLARD PER DETAIL [H/X1.1]
- DBO — DECORATIVE BOLLARD - SEE ELECTRICAL PLAN
- PL — PLANTER
- SITE LIGHTING - SEE ELECTRICAL PLANS
1. BUILDING OVERHANG, SEE ARCHITECTURAL PLANS
2. INSTALL 6' CHAIN LINK FENCE POST PER DETAIL [A/X1.4] AND CONNECT TO POST
3. ATHLETIC EQUIPMENT, SEE ARCHITECTURAL PLANS
4. PAINT TOP AND FACE OF CURB RED WITH 4" HIGH WHITE LETTERING, "NO PARKING - FIRE LANE", AT 30' MAX ON CENTER. WHERE NO CURB EXISTS, PAINT ASPHALT
5. PILASTER COLUMNS WITH ENTRANCE SIGNAGE, SEE STRUCTURAL PLANS
6. DRIVE APPROACH PER CITY OF PARLIER STD. DWG. ST-16
7. SIDEWALK, CURB AND GUTTER PER CITY OF PARLIER STD. DWG. ST-11A AND ST-12
8. CONCRETE SEAT WALLS, SEE ARCHITECTURAL PLANS
9. PARLIER HIGH SCHOOL LOGO, SEE ARCHITECTURAL PLANS
10. FLAGPOLE, SEE ARCHITECTURAL PLANS
11. SCOREBOARD, SEE ARCHITECTURAL PLANS
12. CONNECT NEW FENCING TO EXISTING POST SIMILAR TO DETAIL [A/X1.5]
13. PROVIDE 4" (MAX) SEPARATION FROM POST OR CMU WALLS TO BUILDING PER DETAIL [A/X1.3]
14. KNOX BOX LOCATION PER DETAIL [L/X1.1]
15. SEE ARCHITECTURAL PLANS FOR CMU WALL AND GATE
16. SEE ARCHITECTURAL PLANS FOR CONCRETE WALL
17. SEE ARCHITECTURAL PLANS FOR TRACK HEADER AND FENCING IMPROVEMENTS
18. BUILDING ENTRY GATES, SEE ARCHITECTURAL PLANS
19. PAINT 4" WIDE WHITE BORDER AND 4" WHITE STRIPES AT 3' ON CENTER

GENERAL SITE NOTES:

1. ALL CONCRETE MOWSTRIPS, RAMPS AND SIDEWALKS SHALL HAVE WEAKENED PLANE JOINTS AT 10 FEET MAXIMUM ON CENTER AND EXPANSION JOINTS AT 30 FEET MAXIMUM ON CENTER PER DETAIL [A/X1.1]
2. INSTALL DOWELED CONNECTION AT JOINT OF NEW CONCRETE TO EXISTING CONCRETE PER DETAIL [C/X1.1]
3. NO CONCRETE MAY BE POURED UNTIL THE FORMS HAVE BEEN REVIEWED AND APPROVED BY THE PROJECT INSPECTOR.
4. ALL BURIED METALLIC OBJECTS SHALL HAVE A PROTECTIVE COATING OR BE WRAPPED WITH APPROVED PROTECTIVE WRAP.
5. ADJUST EXISTING SPRINKLER HEADS AND LATERAL LINES AS REQUIRED BY NEW IMPROVEMENTS, OR AS SHOWN ON THE IRRIGATION PLANS.
6. 2 WORKING DAYS BEFORE COMMENCING EXCAVATION OPERATIONS WITHIN THE STREET RIGHT-OF-WAY AND/OR UTILITY EASEMENTS, ALL EXISTING UNDERGROUND FACILITIES SHALL HAVE BEEN LOCATED BY UNDERGROUND SERVICES ALERT (USA). CALL 1-800-642-2444
7. ANY SURVEY MONUMENTS WITHIN THE AREA OF CONSTRUCTION SHALL BE PRESERVED OR RESET BY A PERSON LICENSED TO PRACTICE LAND SURVEYING IN THE STATE OF CALIFORNIA. REPLACEMENT TO BE AT CONTRACTOR'S SOLE EXPENSE.
8. REPAIR ALL DAMAGED AND/OR OFF-GRADE CONCRETE STREET IMPROVEMENTS AS DETERMINED BY THE AGENCY HAVING JURISDICTION PRIOR TO OCCUPANCY
9. OBTAIN ALL REQUIRED PERMITS AND APPROVALS FROM AGENCY HAVING JURISDICTION FOR WORK WITHIN THE PUBLIC RIGHT OF WAY

GATE SCHEDULE:

GATE ID	REFERENCE DETAIL	GATE FUNCTION	ACCESS	FIRE ACCESS
G1	[A/X1.5]	DOUBLE LEAF CHAIN LINK MAINTENANCE GATE	LOCKABLE FORK LATCH	N/A
G2	[A/X1.5]	SINGLE LEAF CHAIN LINK MAINTENANCE SWING GATE	LOCKABLE FORK LATCH	N/A
G3	[A/X1.3]	DECORATIVE METAL FIRE ACCESS ROLLING GATE	KNOX PADLOCK AND KNOX BOX PER CITY OF PARLIER FIRE DEPARTMENT REQUIREMENTS	YES
G4	[A/X1.3]	DOUBLE LEAF DECORATIVE METAL ACCESSIBLE PEDESTRIAN GATE	ADA/CBC ACCESSIBLE PANIC HARDWARE, AND RHODES STYLE LEVER HANDLE	N/A
G5	[A/X1.3]	DOUBLE LEAF DECORATIVE METAL MAINTENANCE SWING GATE	LOCKABLE FORK LATCH	N/A
G6	[A/X1.4]	DOUBLE LEAF SLATTED CHAIN LINK ACCESSIBLE PEDESTRIAN GATE	LOCKABLE FORK LATCH	N/A

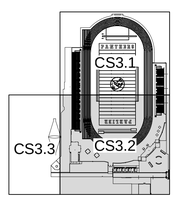

KEYMAP

SCALE: 1"=20'

0 5 20 40
SCALE IN FEET

Know what's below. Call before you dig.

PBK
www.pbk.com
559-449-8400
FRESNO, CA

PARLIER HS STADIUM REPLACEMENT

603 3rd Street
Parlier, CA 93648

CLIENT PROJECT NO. 250093
DSA SUBMISSION
DSA APPL. NO. - 02-124002 DSA FILE NO. - 10-H12

PARLIER UNIFIED SCHOOL DISTRICT

Blair, Church & Flynn
CONSULTING ENGINEERS

REGISTERED PROFESSIONAL ENGINEER
LANE R. BAIN
No. 47755
STATE OF CALIFORNIA
5-14-26
Date Signed:

CLIENT	
PARLIER UNIFIED SCHOOL DISTRICT	
DATE	PROJECT NUMBER
2026/02/09	250093

DRAWING HISTORY

No.	Description	Date

CHECKED BY: GP
DRAWN BY: SD

PARTIAL SITE PLAN

CS3.2

Drawing: P:\224\224-040\Site\ProductionDrawing\224404_SI01.dwg, CS3.2 -
Plot by: gaineda Jun 19, 2026 - 5:00pm

0"
1"

PARTIAL SITE PLAN
CS3.3

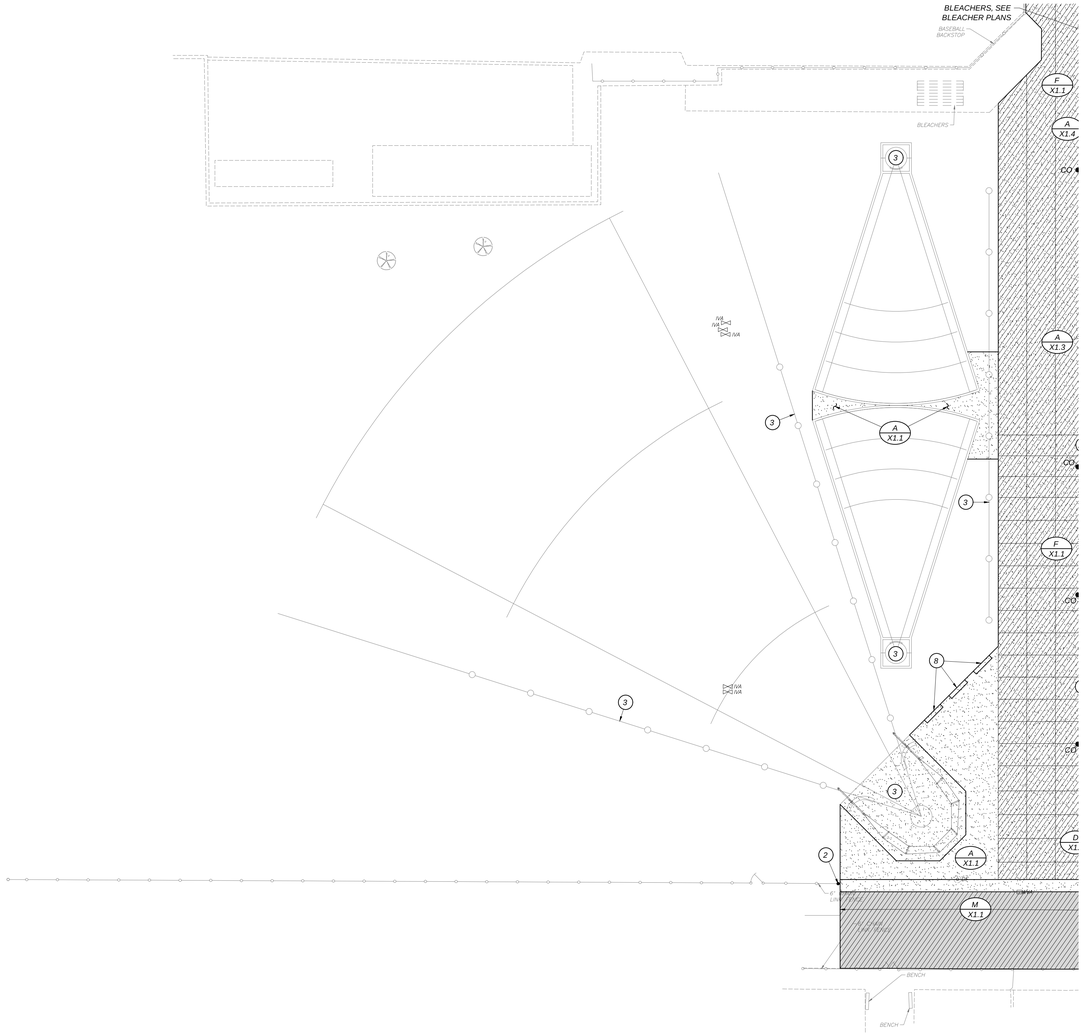

SEE SHEET CS3.2 FOR CONTINUATION

SITE LEGEND:

- LIMITS OF CONCRETE IMPROVEMENTS
- LIMITS OF HEAVY DUTY CONCRETE IMPROVEMENTS
- LIMITS OF CRUSHED ROCK DRIVE IMPROVEMENTS PER DETAIL [E/X1.1]
- LIMITS OF REGULAR DUTY ASPHALTIC CONCRETE PAVEMENT STRUCTURAL SECTION PER DETAIL [B/X1.1]
- LIMITS OF HEAVY DUTY ASPHALTIC CONCRETE PAVEMENT STRUCTURAL SECTION PER DETAIL [B/X1.1]
- LIMITS OF ASPHALT PLUG IMPROVEMENTS
- DETECTABLE WARNING SURFACE PER DETAIL [E/X1.2]
- LIMITS OF DECOMPOSED GRANITE [K/X1.4]
- SEE ARCHITECTURAL PLANS FOR TRACK AND FIELD IMPROVEMENTS
- LIMITS OF PAINTED CURB
- BO — BOLLARD PER DETAIL [H/X1.1]
- DBO — DECORATIVE BOLLARD - SEE ELECTRICAL PLAN
- PL — PLANTER
- SITE LIGHTING - SEE ELECTRICAL PLANS
- (1) BUILDING OVERHANG, SEE ARCHITECTURAL PLANS
- (2) INSTALL 6' CHAIN LINK FENCE POST PER DETAIL [A/X1.4] AND CONNECT TO POST
- (3) ATHLETIC EQUIPMENT, SEE ARCHITECTURAL PLANS
- (4) PAINT TOP AND FACE OF CURB RED WITH 4" HIGH WHITE LETTERING, "NO PARKING - FIRE LANE", AT 30' MAX ON CENTER. WHERE NO CURB EXISTS, PAINT ASPHALT
- (5) PILASTER COLUMNS WITH ENTRANCE SIGNAGE, SEE STRUCTURAL PLANS
- (6) DRIVE APPROACH PER CITY OF PARLIER STD. DWG. ST-16
- (7) SIDEWALK, CURB AND GUTTER PER CITY OF PARLIER STD. DWG. ST-11A AND ST-12
- (8) CONCRETE SEAT WALLS, SEE ARCHITECTURAL PLANS
- (9) PARLIER HIGH SCHOOL LOGO, SEE ARCHITECTURAL PLANS
- (10) FLAGPOLE, SEE ARCHITECTURAL PLANS
- (11) SCOREBOARD, SEE ARCHITECTURAL PLANS
- (12) CONNECT NEW FENCING TO EXISTING POST SIMILAR TO DETAIL [A/X1.5]
- (13) PROVIDE 4" (MAX) SEPARATION FROM POST OR CMU WALLS TO BUILDING PER DETAIL [A/X1.3]
- (14) KNOX BOX LOCATION PER DETAIL [L/X1.1]
- (15) SEE ARCHITECTURAL PLANS FOR CMU WALL AND GATE
- (16) SEE ARCHITECTURAL PLANS FOR CONCRETE WALL
- (17) SEE ARCHITECTURAL PLANS FOR TRACK HEADER AND FENCING IMPROVEMENTS
- (18) BUILDING ENTRY GATES, SEE ARCHITECTURAL PLANS
- (19) PAINT 4" WIDE WHITE BORDER AND 4" WHITE STRIPES AT 3' ON CENTER

GENERAL SITE NOTES:

1. ALL CONCRETE MOWSTRIPS, RAMPS AND SIDEWALKS SHALL HAVE WEAKENED PLANE JOINTS AT 10 FEET MAXIMUM ON CENTER AND EXPANSION JOINTS AT 30 FEET MAXIMUM ON CENTER PER DETAIL [A/X1.1]
2. INSTALL DOWELED CONNECTION AT JOINT OF NEW CONCRETE TO EXISTING CONCRETE PER DETAIL [C/X1.1]
3. NO CONCRETE MAY BE POURED UNTIL THE FORMS HAVE BEEN REVIEWED AND APPROVED BY THE PROJECT INSPECTOR.
4. ALL BURIED METALLIC OBJECTS SHALL HAVE A PROTECTIVE COATING OR BE WRAPPED WITH APPROVED PROTECTIVE WRAP.
5. ADJUST EXISTING SPRINKLER HEADS AND LATERAL LINES AS REQUIRED BY NEW IMPROVEMENTS, OR AS SHOWN ON THE IRRIGATION PLANS.
6. 2 WORKING DAYS BEFORE COMMENCING EXCAVATION OPERATIONS WITHIN THE STREET RIGHT-OF-WAY AND/OR UTILITY EASEMENTS, ALL EXISTING UNDERGROUND FACILITIES SHALL HAVE BEEN LOCATED BY UNDERGROUND SERVICES ALERT (USA). CALL 1-800-642-2444
7. ANY SURVEY MONUMENTS WITHIN THE AREA OF CONSTRUCTION SHALL BE PRESERVED OR RESET BY A PERSON LICENSED TO PRACTICE LAND SURVEYING IN THE STATE OF CALIFORNIA. REPLACEMENT TO BE AT CONTRACTOR'S SOLE EXPENSE.
8. REPAIR ALL DAMAGED AND/OR OFF-GRADE CONCRETE STREET IMPROVEMENTS AS DETERMINED BY THE AGENCY HAVING JURISDICTION PRIOR TO OCCUPANCY
9. OBTAIN ALL REQUIRED PERMITS AND APPROVALS FROM AGENCY HAVING JURISDICTION FOR WORK WITHIN THE PUBLIC RIGHT OF WAY

GATE SCHEDULE:

GATE ID	REFERENCE DETAIL	GATE FUNCTION	ACCESS	FIRE ACCESS
G1	[A/X1.5]	DOUBLE LEAF CHAIN LINK MAINTENANCE GATE	LOCKABLE FORK LATCH	N/A
G2	[A/X1.5]	SINGLE LEAF CHAIN LINK MAINTENANCE SWING GATE	LOCKABLE FORK LATCH	N/A
G3	[A/X1.3]	DECORATIVE METAL FIRE ACCESS ROLLING GATE	KNOX PADLOCK AND KNOX BOX PER CITY OF PARLIER FIRE DEPARTMENT REQUIREMENTS	YES
G4	[A/X1.3]	DOUBLE LEAF DECORATIVE METAL ACCESSIBLE PEDESTRIAN GATE	ADA/CBC ACCESSIBLE PANIC HARDWARE, AND RHODES STYLE LEVER HANDLE	N/A
G5	[A/X1.3]	DOUBLE LEAF DECORATIVE METAL MAINTENANCE SWING GATE	LOCKABLE FORK LATCH	N/A
G6	[A/X1.4]	DOUBLE LEAF SLATTED CHAIN LINK ACCESSIBLE PEDESTRIAN GATE	LOCKABLE FORK LATCH	N/A

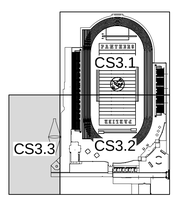

KEYMAP

SCALE: N 1"=20'

0 5 20 40
SCALE IN FEET

811 Know what's below. Call before you dig.

PBK
www.pbk.com
559-449-8400
FRESNO, CA

PARLIER HS STADIUM REPLACEMENT

603 3rd Street
Parlier, CA 93648

CLIENT PROJECT NO: 250093
DSA SUBMISSION
DSA APPL. NO.: 02-124002 DSA FILE NO.: 10-H12

PARLIER UNIFIED SCHOOL DISTRICT

Blair, Church & Flynn
CONSULTING ENGINEERS

REGISTERED PROFESSIONAL ENGINEER
LANE R. BARTLETT
No. 47033
CIVIL
STATE OF CALIFORNIA
5-14-26
Date Signed

CLIENT	
PARLIER UNIFIED SCHOOL DISTRICT	
DATE	PROJECT NUMBER
2026/02/09	250093

DRAWING HISTORY

No.	Description	Date

CHECKED BY: GP

DRAWN BY: SD

PARTIAL SITE PLAN

CS3.3

Drawing: P:\224\224-0404\Site\Production\Drawings\224404_S01.dwg; CS3.3 ----
Plot by: gpineda Jun 19, 2026 - 5:00pm

PARTIAL HORIZONTAL CONTROL PLAN
CS4.1

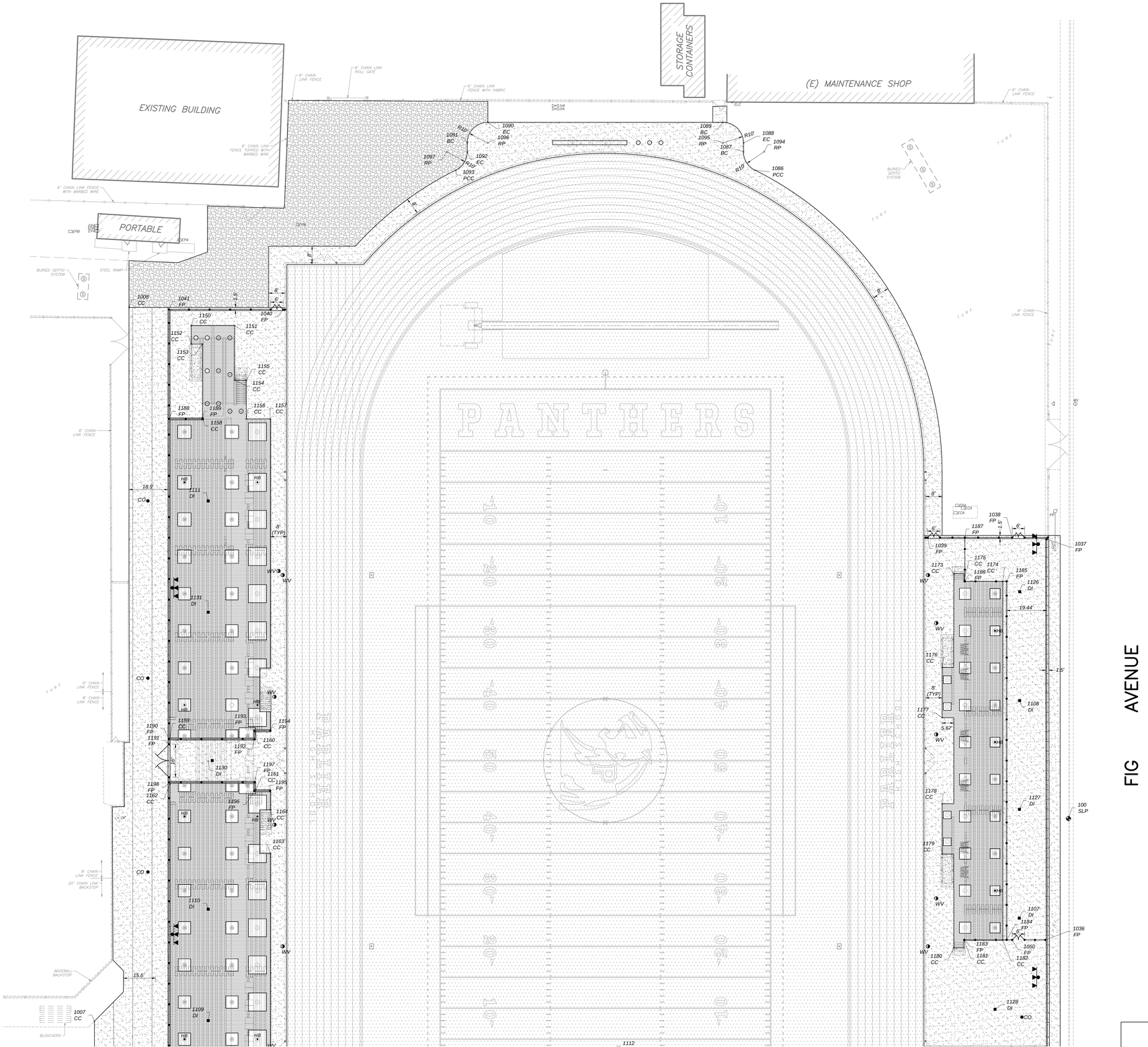

SEE SHEET CS4.2 FOR CONTINUATION

FIG AVENUE

GENERAL HORIZONTAL CONTROL NOTES:

1. ALIGNMENT OF THE SITE LAYOUT GRID IS BASED ON AN ASSUMED COORDINATE SYSTEM. SITE LAYOUT POINT 100 IS A CHISELED "X" ON TOP FACE OF CURB ALONG FIG AVENUE LOCATED APPROXIMATELY 149' SOUTH OF THE EXISTING POWER POLE LOCATED EASTERLY FROM THE NORTHEAST CORNER OF THE EXISTING BLEACHERS

   SITE LAYOUT POINT 101 IS A CHISELED "X" ON TOP FACE OF CURB APPROXIMATELY 380' SOUTH OF POWER POLE LOCATED ON NORTHEAST CORNER OF BLEACHER CONCRETE PAD ALONG FIG AVENUE

   SITE LAYOUT POINT 102 IS A CHISELED "X" ON THE VALLEY GUTTER APPROXIMATELY 55' SOUTHEAST OF THE SOUTHEAST CORNER OF MULTI-PURPOSE BUILDING "O"

2. DIMENSIONS AND POINTS ARE TO CENTER OF FENCE POSTS, FACE OF BUILDINGS, TOP FACE OF CURB, OR EDGE OF CONCRETE, UNLESS SHOWN OTHERWISE.

HORIZONTAL CONTROL LEGEND:

	SEE ARCHITECTURAL PLANS FOR TRACK AND FIELD IMPROVEMENTS
1000 LCP	LAYOUT COORDINATE POINT
100 SLP	SITE LAYOUT POINT
200 BLP	BUILDING LAYOUT POINT
AC	CORNER ASPHALT
BC	BEGIN CURVE
BW	BLOCK WALL
CC	CORNER CONCRETE
DI	CENTER OF DRAIN INLET
EC	END CURVE
FP	FENCE POST
MH	MANHOLE
PCC	POINT OF COMPOUND CURVE
PL	PILASTER
RP	RADIUS POINT

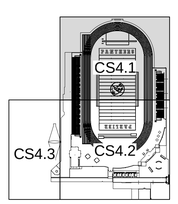

KEYMAP

SCALE: N 1"=20'

0 5 20 40
SCALE IN FEET

811
Know what's below.
Call before you dig.

PBK

FRESNO, CA 559-448-8400 www.pbk.com

PARLIER HS STADIUM REPLACEMENT

603 3rd Street
Parlier, CA 93648

CLIENT PROJECT NO: 250093
DSA SUBMISSION
DSA APPL. NO.: 02-124002 DSA FILE NO.: 10-H12

PARLIER UNIFIED SCHOOL DISTRICT

Blair, Church & Flynn
CONSULTING ENGINEERS

REGISTERED PROFESSIONAL ENGINEER
LANE R. BAKER
No. 47033
CIVIL
STATE OF CALIFORNIA
5-14-26
Date Signed:

CLIENT	
PARLIER UNIFIED SCHOOL DISTRICT	
DATE 2026/02/09	PROJECT NUMBER 250093

DRAWING HISTORY

No.	Description	Date

CHECKED BY: GP
DRAWN BY: SD

PARTIAL HORIZONTAL CONTROL PLAN

CS4.1

Drawing: P:\224\224-0404\Site\Production\Drawings\224404_HC01.dwg; CS4.1 - ----
Plot by: gpineda Jun 19, 2026 - 5:01pm

PARTIAL HORIZONTAL CONTROL PLAN
CS4.2

0"
1"

SEE SHEET CS4.1 FOR CONTINUATION

SEE SHEET CS4.3 FOR CONTINUATION

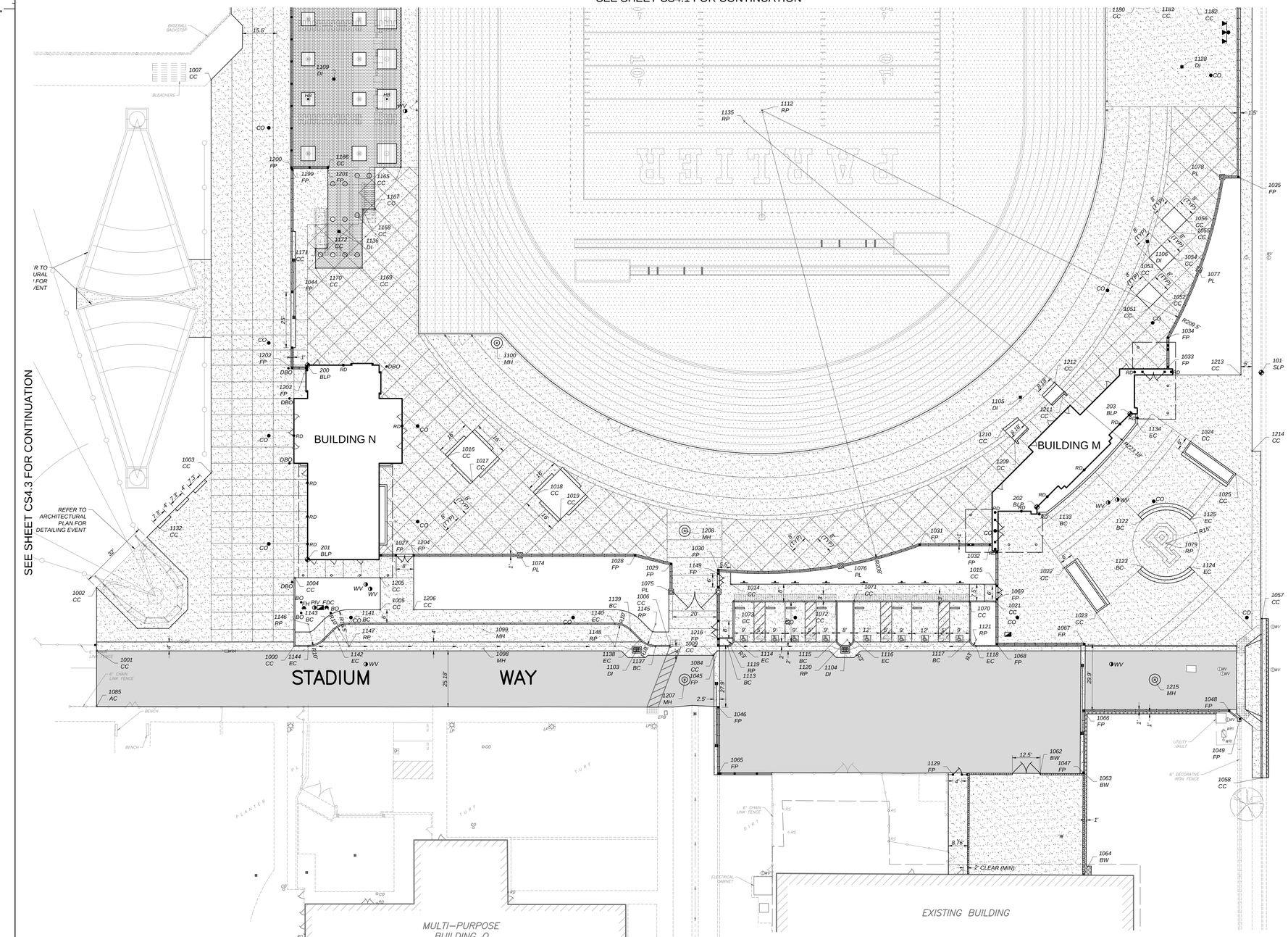

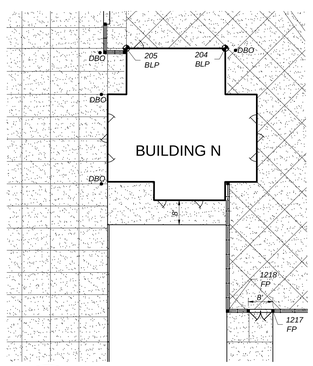

A CS4.2 ADD ALTERNATIVE DEDUCTION 3
1" = 20'

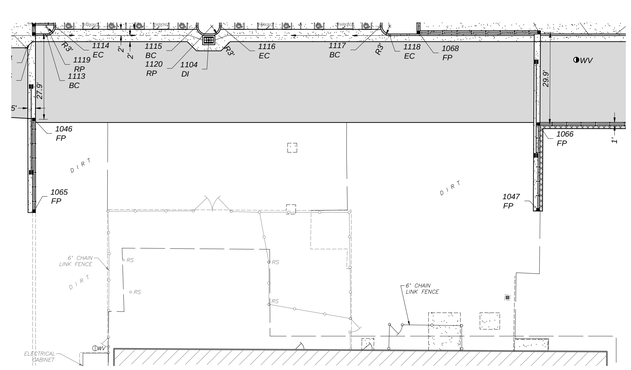

B CS4.2 ADD ALTERNATIVE DEDUCTION 6
1" = 20'

GENERAL HORIZONTAL CONTROL NOTES:

1. *ALIGNMENT OF THE SITE LAYOUT GRID IS BASED ON AN ASSUMED COORDINATE SYSTEM. SITE LAYOUT POINT 100 IS A CHISELED "X" ON TOP FACE OF CURB ALONG FIG AVENUE LOCATED APPROXIMATELY 149' SOUTH OF THE EXISTING POWER POLE LOCATED EASTERLY FROM THE NORTHEAST CORNER OF THE EXISTING BLEACHERS*

   SITE LAYOUT POINT 101 IS A CHISELED "X" ON TOP FACE OF CURB APPROXIMATELY 380' SOUTH OF POWER POLE LOCATED ON NORTHEAST CORNER OF BLEACHER CONCRETE PAD ALONG FIG AVENUE

   SITE LAYOUT POINT 102 IS A CHISELED "X" ON THE VALLEY GUTTER APPROXIMATELY 55' SOUTHEAST OF THE SOUTHEAST CORNER OF MULTI-PURPOSE BUILDING "O"

2. *DIMENSIONS AND POINTS ARE TO CENTER OF FENCE POSTS, FACE OF BUILDINGS, TOP FACE OF CURB, OR EDGE OF CONCRETE, UNLESS SHOWN OTHERWISE.*

HORIZONTAL CONTROL LEGEND:

	SEE ARCHITECTURAL PLANS FOR TRACK AND FIELD IMPROVEMENTS
1000 LCP	*LAYOUT COORDINATE POINT*
100 SLP	*SITE LAYOUT POINT*
200 BLP	*BUILDING LAYOUT POINT*
AC	*CORNER ASPHALT*
BC	*BEGIN CURVE*
BW	*BLOCK WALL*
CC	*CORNER CONCRETE*
DI	*CENTER OF DRAIN INLET*
EC	*END CURVE*
FP	*FENCE POST*
MH	*MANHOLE*
PCC	*POINT OF COMPOUND CURVE*
PL	*PILASTER*
RP	*RADIUS POINT*

KEYMAP

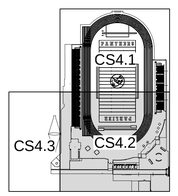

SCALE: N 1"=20'
0 5 20 40
SCALE IN FEET

Know what's below. Call before you dig.

PBK
www.pbk.com
559-449-8400
FRESNO, CA

PARLIER HS STADIUM REPLACEMENT

CLIENT PROJECT NO: 250093
DSA SUBMISSION
DSA APPL. NO.: 02-124002 DSA FILE NO.: 10-H12

PARLIER UNIFIED SCHOOL DISTRICT

Blair, Church & Flynn
CONSULTING ENGINEERS

REGISTERED PROFESSIONAL ENGINEER
LANE R. BAKER
No. 47033
CIVIL
STATE OF CALIFORNIA
5-14-26
Date Signed

CLIENT	
PARLIER UNIFIED SCHOOL DISTRICT	
DATE: 2026/02/09	PROJECT NUMBER: 250093

DRAWING HISTORY

No.	Description	Date

CHECKED BY: GP
DRAWN BY: SD

PARTIAL HORIZONTAL CONTROL PLAN

CS4.2

Drawing: P:\224\224-040#\Site\ProductionDrawings\224040_HC01.dwg, CS4.2 ----
Plot by: gpinedo Jun 19, 2026 - 5:01pm

PARTIAL HORIZONTAL CONTROL PLAN AND TABLE
CS4.3

0" 1"

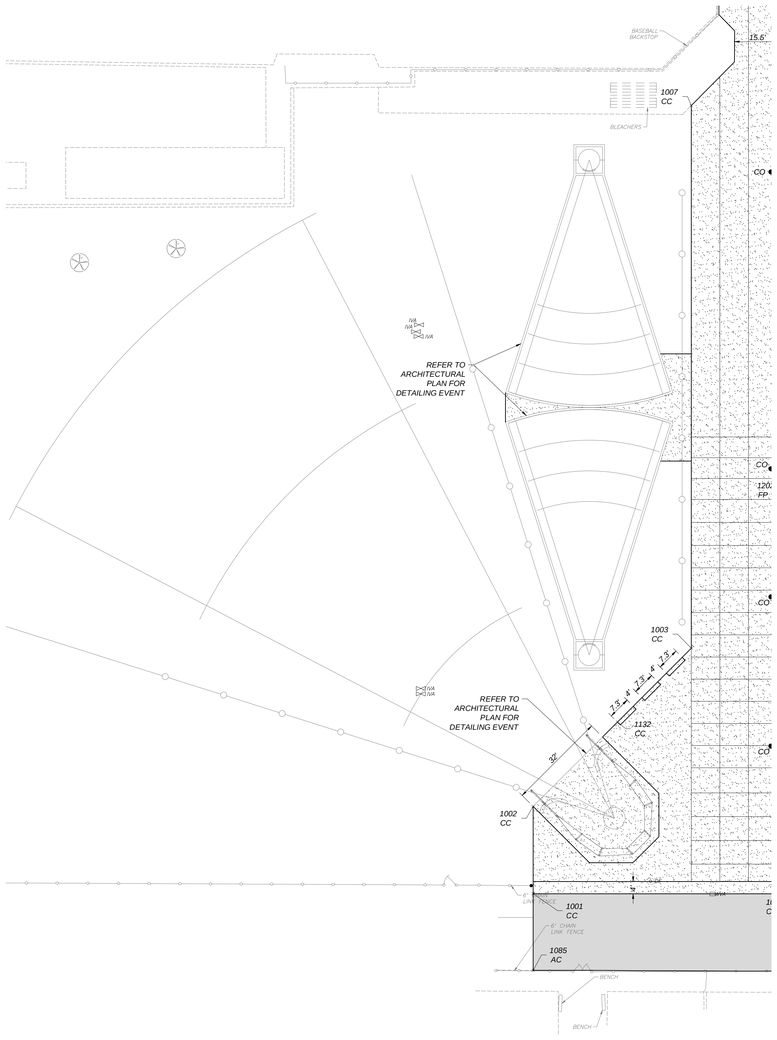

SEE SHEET CS4.2 FOR CONTINUATION

NORTHING EASTING TABLE

POINT	NORTHING	EASTING	ABV	DESCRIPTION
100	5683.70	5032.30	SLP	SITE LAYOUT POINT
101	5453.68	5032.45	SLP	SITE LAYOUT POINT
102	5065.67	4779.60	SLP	SITE LAYOUT POINT
200	5457.03	4603.16	BLP	BUILDING LAYOUT POINT
201	5369.54	4603.16	BLP	BUILDING LAYOUT POINT
202	5393.17	4931.45	BLP	BUILDING LAYOUT POINT
203	5435.14	4973.45	BLP	BUILDING LAYOUT POINT
204	5457.03	4635.35	BLP	BUILDING LAYOUT POINT
205	5457.03	4603.16	BLP	BUILDING LAYOUT POINT
1000	5330.46	4596.99	CC	CORNER CONCRETE
1001	5328.46	4508.18	CC	CORNER CONCRETE
1002	5356.95	4508.18	CC	CORNER CONCRETE
1003	5408.52	4559.74	CC	CORNER CONCRETE
1004	5361.36	4597.49	CC	CORNER CONCRETE
1005	5346.96	4635.88	CC	CORNER CONCRETE
1006	5330.46	4766.23	CC	CORNER CONCRETE
1007	5585.45	4559.74	CC	CORNER CONCRETE
1008	5931.57	4576.54	CC	CORNER CONCRETE
1009	5326.46	4785.59	CC	CORNER CONCRETE
1014	5358.46	4793.58	CC	CORNER CONCRETE
1015	5358.46	4912.95	CC	CORNER CONCRETE
1016	5415.81	4666.03	CC	CORNER CONCRETE
1017	5404.50	4677.34	CC	CORNER CONCRETE
1018	5398.84	4705.62	CC	CORNER CONCRETE
1019	5387.53	4716.94	CC	CORNER CONCRETE
1021	5350.46	4912.95	CC	CORNER CONCRETE
1022	5365.91	4943.75	CC	CORNER CONCRETE
1023	5345.59	4958.31	CC	CORNER CONCRETE
1024	5422.73	5000.56	CC	CORNER CONCRETE
1025	5408.17	5020.89	CC	CORNER CONCRETE
1027	5371.48	4636.20	FP	FENCE POST
1028	5371.48	4750.62	FP	FENCE POST
1029	5367.53	4766.74	FP	FENCE POST
1030	5364.67	4788.08	FP	FENCE POST
1031	5376.23	4878.60	FP	FENCE POST
1032	5376.23	4910.23	FP	FENCE POST
1033	5456.23	4990.41	FP	FENCE POST
1034	5469.39	4990.42	FP	FENCE POST
1035	5541.69	5022.13	FP	FENCE POST
1036	5624.87	5021.11	FP	FENCE POST
1037	5819.20	5021.71	FP	FENCE POST
1038	5820.00	5005.01	FP	FENCE POST
1039	5820.00	4964.00	FP	FENCE POST
1040	5930.57	4651.29	FP	FENCE POST
1041	5930.57	4595.94	FP	FENCE POST
1044	5489.91	4596.19	FP	FENCE POST
1045	5328.46	4787.58	FP	FENCE POST
1046	5303.10	4788.10	FP	FENCE POST
1047	5273.62	4952.39	FP	FENCE POST
1048	5301.60	5018.01	FP	FENCE POST
1049	5297.87	5022.76	FP	FENCE POST
1050	5624.87	5005.01	FP	FENCE POST
1051	5482.77	4981.89	CC	CORNER CONCRETE
1052	5488.43	4987.54	CC	CORNER CONCRETE
1053	5499.74	4987.54	CC	CORNER CONCRETE
1054	5505.40	4993.20	CC	CORNER CONCRETE
1055	5516.71	4993.20	CC	CORNER CONCRETE
1056	5522.33	4998.90	CC	CORNER CONCRETE
1057	5342.98	5032.72	CC	CORNER CONCRETE
1058	5271.33	5032.77	CC	CORNER CONCRETE
1062	5273.40	4932.89	BW	BLOCK WALL
1063	5273.22	4952.89	BW	BLOCK WALL
1064	5227.88	4952.63	BW	BLOCK WALL
1065	5273.22	4788.14	FP	FENCE POST
1066	5301.60	4952.55	FP	FENCE POST
1067	5331.46	4952.72	FP	FENCE POST
1068	5331.46	4913.45	FP	FENCE POST
1069	5351.71	4913.45	FP	FENCE POST
1070	5350.46	4901.09	CC	CORNER CONCRETE
1071	5350.96	4849.08	CC	CORNER CONCRETE
1072	5350.96	4841.08	CC	CORNER CONCRETE
1073	5350.96	4795.08	CC	CORNER CONCRETE
1074	5371.48	4698.81	PL	PILASTER
1075	5355.06	4766.74	PL	PILASTER
1076	5366.80	4843.08	PL	PILASTER
1077	5500.11	5004.50	PL	PILASTER
1078	5541.69	5014.87	PL	PILASTER
1079	5376.88	4989.60	RP	RADIUS POINT
1084	5326.97	4786.09	CC	CORNER CONCRETE
1085	5303.48	4508.17	AC	CORNER ASPHALT

POINT	NORTHING	EASTING	ABV	DESCRIPTION
1086	5998.10	4880.21	PCC	POINT OF COMPOUND CURVE
1087	6007.06	4874.65	BC	BEGIN CURVE
1088	6011.28	4874.65	EC	END CURVE
1089	6021.28	4864.65	BC	BEGIN CURVE
1090	6021.28	4750.62	EC	END CURVE
1091	6011.28	4740.62	BC	BEGIN CURVE
1092	6007.06	4740.62	EC	END CURVE
1093	5998.10	4735.06	PCC	POINT OF COMPOUND CURVE
1094	6007.06	4884.65	RP	RADIUS POINT
1095	6011.28	4864.65	RP	RADIUS POINT
1096	6011.28	4750.62	RP	RADIUS POINT
1097	6007.06	4730.62	RP	RADIUS POINT
1098	5329.47	4682.22	MH	MANHOLE
1099	5338.03	4682.23	MH	MANHOLE
1100	5467.03	4688.35	MH	MANHOLE
1103	5328.96	4751.32	DI	CENTER OF DRAIN INLET
1104	5328.95	4845.08	DI	CENTER OF DRAIN INLET
1105	5442.59	4923.97	DI	CENTER OF DRAIN INLET
1106	5512.67	4981.19	DI	CENTER OF DRAIN INLET
1107	5635.42	5008.43	DI	CENTER OF DRAIN INLET
1108	5740.93	5008.58	DI	CENTER OF DRAIN INLET
1109	5585.75	4614.98	DI	CENTER OF DRAIN INLET
1110	5639.77	4614.99	DI	CENTER OF DRAIN INLET
1111	5837.75	4614.98	DI	CENTER OF DRAIN INLET
1112	5571.75	4807.64	RP	RADIUS POINT
1113	5330.45	4792.25	BC	BEGIN CURVE
1114	5333.45	4795.08	EC	END CURVE
1115	5333.45	4841.08	BC	BEGIN CURVE
1116	5333.45	4849.08	EC	END CURVE
1117	5333.46	4901.09	BC	BEGIN CURVE
1118	5330.46	4904.09	EC	END CURVE
1119	5333.45	4792.08	RP	RADIUS POINT
1120	5333.45	4846.08	RP	RADIUS POINT
1121	5333.46	4904.09	RP	RADIUS POINT
1122	5387.48	4978.99	BC	BEGIN CURVE
1123	5366.27	4978.99	BC	BEGIN CURVE
1124	5366.27	5000.20	EC	END CURVE
1125	5387.48	5000.20	EC	END CURVE
1126	5793.69	5008.66	DI	CENTER OF DRAIN INLET
1127	5688.17	5008.51	DI	CENTER OF DRAIN INLET
1128	5591.23	4996.69	DI	CENTER OF DRAIN INLET
1129	5272.78	4893.63	FP	FENCE POST
1130	5711.58	4614.94	DI	CENTER OF DRAIN INLET
1131	5783.75	4614.98	DI	CENTER OF DRAIN INLET
1132	5384.44	4535.66	CC	CORNER CONCRETE
1133	5390.01	4936.06	BC	BEGIN CURVE
1134	5430.57	4976.58	EC	END CURVE
1135	5566.73	4799.75	RP	RADIUS POINT
1136	5517.20	4617.27	DI	CENTER OF DRAIN INLET
1137	5330.46	4759.76	BC	BEGIN CURVE
1138	5333.39	4752.69	EC	END CURVE
1139	5337.53	4748.55	BC	BEGIN CURVE
1140	5340.46	4741.48	EC	END CURVE
1141	5340.46	4621.76	BC	BEGIN CURVE
1142	5337.53	4614.69	EC	END CURVE
1143	5333.39	4610.55	BC	BEGIN CURVE
1144	5330.46	4603.48	EC	END CURVE
1145	5340.46	4759.76	RP	RADIUS POINT
1146	5340.46	4603.48	RP	RADIUS POINT
1147	5330.46	4621.76	RP	RADIUS POINT
1148	5330.46	4741.48	RP	RADIUS POINT
1149	5363.19	4788.08	FP	FENCE POST
1150	5922.79	4606.69	CC	CORNER CONCRETE
1151	5922.79	4627.77	CC	CORNER CONCRETE
1152	5913.83	4606.69	CC	CORNER CONCRETE
1153	5913.83	4612.18	CC	CORNER CONCRETE
1154	5896.29	4627.77	CC	CORNER CONCRETE
1155	5896.29	4633.44	CC	CORNER CONCRETE
1156	5877.50	4633.44	CC	CORNER CONCRETE
1157	5877.50	4645.11	CC	CORNER CONCRETE
1158	5878.01	4612.19	CC	CORNER CONCRETE
1159	5722.75	4596.44	CC	CORNER CONCRETE
1160	5725.74	4637.93	CC	CORNER CONCRETE
1161	5697.74	4637.93	CC	CORNER CONCRETE
1162	5700.76	4596.44	CC	CORNER CONCRETE
1163	5666.75	4645.11	CC	CORNER CONCRETE
1164	5687.96	4645.11	CC	CORNER CONCRETE
1165	5545.99	4645.11	CC	CORNER CONCRETE
1166	5546.50	4612.69	CC	CORNER CONCRETE
1167	5527.21	4633.44	CC	CORNER CONCRETE

POINT	NORTHING	EASTING	ABV	DESCRIPTION
1168	5527.21	4628.02	CC	CORNER CONCRETE
1169	5500.69	4627.77	CC	CORNER CONCRETE
1170	5500.71	4606.69	CC	CORNER CONCRETE
1171	5509.67	4606.69	CC	CORNER CONCRETE
1172	5509.67	4611.90	CC	CORNER CONCRETE
1173	5802.50	4976.67	CC	CORNER CONCRETE
1174	5798.75	5000.42	CC	CORNER CONCRETE
1175	5798.75	4981.67	CC	CORNER CONCRETE
1176	5757.04	4971.00	CC	CORNER CONCRETE
1177	5732.58	4971.00	CC	CORNER CONCRETE
1178	5690.92	4971.00	CC	CORNER CONCRETE
1179	5666.46	4971.00	CC	CORNER CONCRETE
1180	5621.00	4976.67	CC	CORNER CONCRETE
1181	5624.73	4981.67	CC	CORNER CONCRETE
1182	5624.75	5000.42	CC	CORNER CONCRETE
1183	5624.87	4981.81	FP	FENCE POST
1184	5624.87	5002.33	FP	FENCE POST
1185	5798.75	5002.33	FP	FENCE POST
1186	5798.75	4982.04	FP	FENCE POST
1187	5820.00	4982.04	FP	FENCE POST
1188	5877.50	4595.94	FP	FENCE POST
1189	5877.51	4612.19	FP	FENCE POST
1190	5722.25	4595.93	FP	FENCE POST
1191	5719.74	4595.93	FP	FENCE POST
1192	5722.25	4637.43	FP	FENCE POST
1193	5726.24	4637.43	FP	FENCE POST
1194	5726.25	4645.11	FP	FENCE POST
1195	5697.24	4645.03	FP	FENCE POST
1196	5697.24	4637.43	FP	FENCE POST
1197	5701.26	4637.44	FP	FENCE POST
1198	5701.26	4595.93	FP	FENCE POST
1199	5545.09	4596.19	FP	FENCE POST
1200	5546.00	4595.94	FP	FENCE POST
1201	5546.00	4612.19	FP	FENCE POST
1202	5455.79	4596.19	FP	FENCE POST
1203	5455.79	4602.50	FP	FENCE POST
1204	5371.48	4650.88	FP	FENCE POST
1205	5361.35	4635.88	CC	CORNER CONCRETE
1206	5346.96	4650.88	CC	CORNER CONCRETE
1207	5315.49	4772.90	MH	MANHOLE
1208	5382.48	4772.90	MH	MANHOLE
1209	5422.96	4921.46	CC	CORNER CONCRETE
1210	5428.31	4916.12	CC	CORNER CONCRETE
1211	5445.13	4943.63	CC	CORNER CONCRETE
1212	5449.35	4939.41	CC	CORNER CONCRETE
1213	5452.64	5023.28	CC	CORNER CONCRETE
1214	5418.30	5028.26	CC	CORNER CONCRETE
1215	5315.49	4984.51	MH	MANHOLE
1216	5333.89	4788.08	FP	FENCE POST
1217	5371.48	4650.88	FP	FENCE POST
1218	5371.48	4636.20	FP	FENCE POST

GENERAL HORIZONTAL CONTROL NOTES:

1. *ALIGNMENT OF THE SITE LAYOUT GRID IS BASED ON AN ASSUMED COORDINATE SYSTEM. SITE LAYOUT POINT 100 IS A CHISELED "X" ON TOP FACE OF CURB ALONG FIG AVENUE LOCATED APPROXIMATELY 149' SOUTH OF THE EXISTING POWER POLE LOCATED EASTERLY FROM THE NORTHEAST CORNER OF THE EXISTING BLEACHERS*

   SITE LAYOUT POINT 101 IS A CHISELED "X" ON TOP FACE OF CURB APPROXIMATELY 380' SOUTH OF POWER POLE LOCATED ON NORTHEAST CORNER OF BLEACHER CONCRETE PAD ALONG FIG AVENUE

   SITE LAYOUT POINT 102 IS A CHISELED "X" ON THE VALLEY GUTTER APPROXIMATELY 55' SOUTHEAST OF THE SOUTHEAST CORNER OF MULTI-PURPOSE BUILDING "O"
2. *DIMENSIONS AND POINTS ARE TO CENTER OF FENCE POSTS, FACE OF BUILDINGS, TOP FACE OF CURB, OR EDGE OF CONCRETE, UNLESS SHOWN OTHERWISE.*

HORIZONTAL CONTROL LEGEND:

	SEE ARCHITECTURAL PLANS FOR TRACK AND FIELD IMPROVEMENTS
1000 LCP	*LAYOUT COORDINATE POINT*
100 SLP	*SITE LAYOUT POINT*
200 BLP	*BUILDING LAYOUT POINT*
AC	*CORNER ASPHALT*
BC	*BEGIN CURVE*
BW	*BLOCK WALL*
CC	*CORNER CONCRETE*
DI	*CENTER OF DRAIN INLET*
EC	*END CURVE*
FP	*FENCE POST*
MH	*MANHOLE*
PCC	*POINT OF COMPOUND CURVE*
PL	*PILASTER*
RP	*RADIUS POINT*

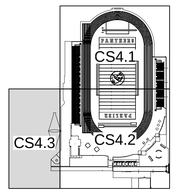

KEYMAP

SCALE: N 1"=20'

0 5 20 40
SCALE IN FEET

Know what's below. Call before you dig.

PBK

www.pbk.com
559-449-8400
FRESNO, CA

PARLIER HS STADIUM REPLACEMENT

CLIENT PROJECT NO: 250093
DSA SUBMISSION
603 3rd Street
Parlier, CA 93648
DSA APPL. NO.: 02-124002 DSA FILE NO.: 10-H12

PARLIER UNIFIED SCHOOL DISTRICT

Blair, Church & Flynn
CONSULTING ENGINEERS

REGISTERED PROFESSIONAL ENGINEER
LANE R. BAZZANELLA
No. 47033
CIVIL
STATE OF CALIFORNIA
5-14-26
Date Signed:

CLIENT
PARLIER UNIFIED SCHOOL DISTRICT

DATE	PROJECT NUMBER
2026/02/09	250093

DRAWING HISTORY

No.	Description	Date

CHECKED BY: GP
DRAWN BY: SD

PARTIAL HORIZONTAL CONTROL PLAN AND TABLE

CS4.3

Drawing: P:\224224-0404\Site\Production\Drawings\224404_HC01.dwg, CS4.3 - ----
Plot by: gjolnede Jun 19, 2026 - 5:01pm

PARTIAL GRADING PLAN
CS5.1

0"
1"

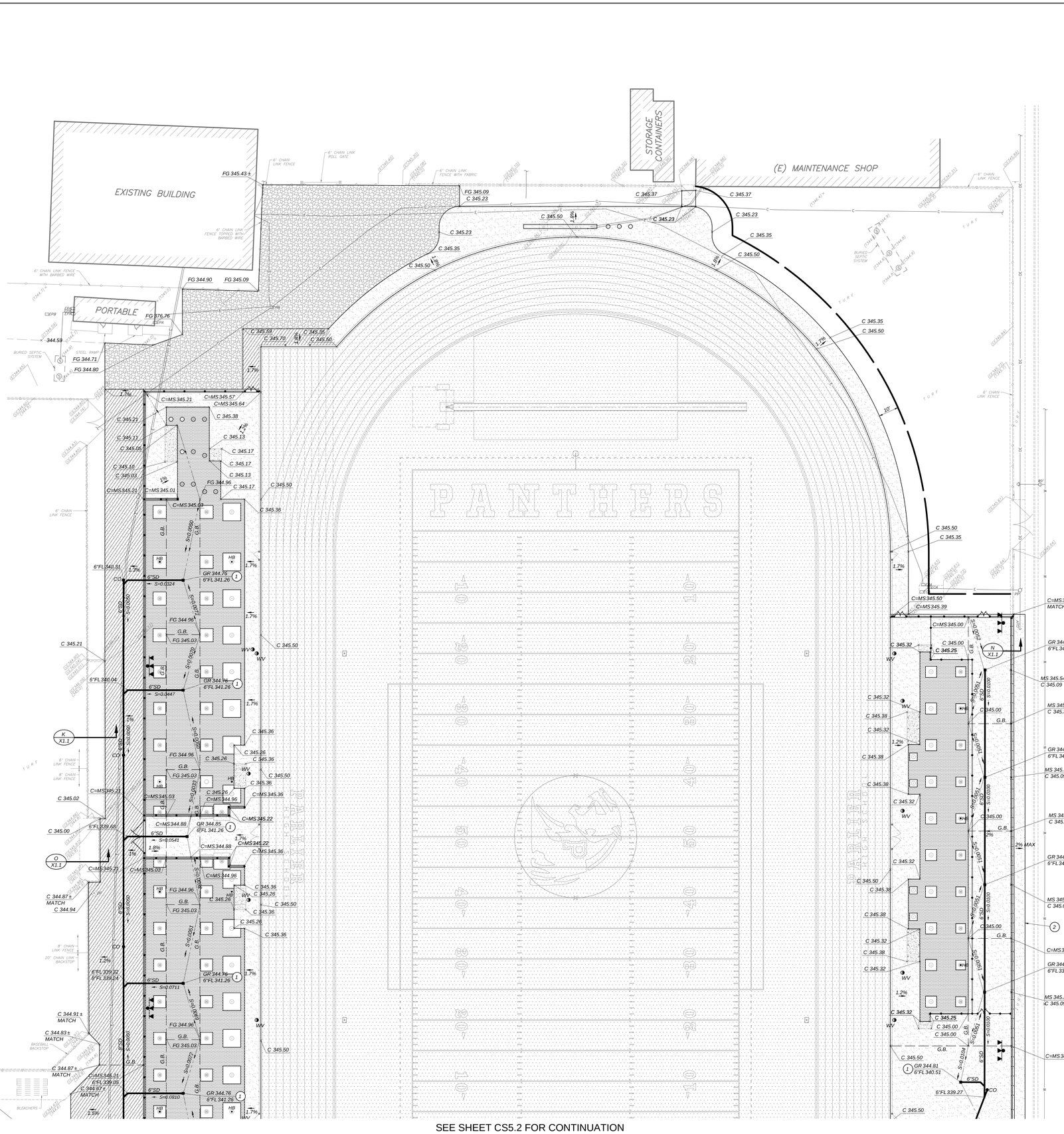

SEE SHEET CS5.2 FOR CONTINUATION

SITE BENCHMARK:

CHISELED "X" ON TOP FACE OF CURB APPROXIMATELY 149' SOUTH OF POWER POLE LOCATED ON NORTHEAST CORNER OF BLEACHER CONCRETE PAD ALONG FIG AVENUE

ELEV.= 345.21 USGS DATUM

GRADING AND DRAINAGE LEGEND:

	SEE ARCHITECTURAL PLANS FOR TRACK AND FIELD IMPROVEMENTS
C	*CONCRETE*
FF	*FINISHED FLOOR*
FG	*FINISHED GRADE*
FL	*FLOWLINE*
G	*GUTTER*
GR	*STORM DRAIN GRATE*
MS	*MOWSTRIP*
P	*PAVEMENT*
TC	*TOP OF CURB*
TW	*TOP OF WALL*
VG	*VALLEY GUTTER FLOWLINE*
(344.9)	*EXISTING ELEVATION*
328.78	*NEW FINISHED GRADE*
	DIRECTION OF SURFACE DRAINAGE
	BUILDING OVER-EXCAVATION LIMITS; SEE DETAIL [B/X1.4]
G.B.	*GRADE BREAK*
	LIMITS OF GRADING
S=0.0050	*PIPE SLOPE AND DIRECTION OF FLOW*
	SWALE AND DIRECTION OF FLOW
1	*P-6 STORM DRAIN INLET PER DETAIL [H/X1.4]*
2	*MATCH NEW CONCRETE ELEVATIONS TO EXISTING CONCRETE ELEVATIONS*
3	*REFER TO PLAYING FIELD PLANS FOR TRACK AND FIELD DRAINAGE*
4	*U-32 STORM DRAIN INLET PER DETAIL [J/X1.4]*
5	*DRAINAGE PIPE, SEE ARCHITECTURAL PLANS*
	STORM DRAIN MANHOLE PER DETAIL [E/X1.4]
CO	*SURFACE CLEANOUT PER DETAIL [G/X1.4]*
RD	*ROOF DRAIN; SEE PLUMBING PLANS*
SD	*STORM DRAIN PIPELINE; SIZE AS NOTED. TRENCH AND BACKFILL PER DETAIL [D/X1.4]*
	POINT OF CONNECTION TO EXISTING OR PROPOSED UTILITY, COORDINATE WITH PLUMBING PLANS PRIOR TO CONNECTION.
S=0.0020	*FLOWLINE SLOPE AND DIRECTION OF FLOW*

GENERAL GRADING AND DRAINAGE NOTES:

THE REQUIREMENTS AND INFORMATION SET OUT BELOW ARE PROVIDED FOR THE CONTRACTOR'S CONVENIENCE AND DO NOT ENCOMPASS ALL PROJECT REQUIREMENTS DESCRIBED BY THE PROJECT PLANS AND SPECIFICATIONS AND/OR APPLICABLE LAWS, REGULATIONS AND/OR BUILDING CODES.

1. *CONSTRUCTION OF ALL PROJECT SITE IMPROVEMENTS SUBJECT TO ADA ACCESS COMPLIANCE, INCLUDING ACCESSIBLE PATH OF TRAVEL, CURB RETURNS, PARKING STALL(S) AND UNLOADING AREAS, BARRIER FREE AMENITIES AND/OR OTHER APPLICABLE SITE IMPROVEMENTS SHALL CONFORM TO THE AMERICANS WITH DISABILITIES ACT, CALIFORNIA TITLE 24, THE CALIFORNIA BUILDING CODE, CURRENT EDITION(S).*
2. *CONTRACTOR SHALL FIELD VERIFY ALL GRADES AND SLOPES PRIOR TO THE PLACEMENT OF CONCRETE AND/OR PAVEMENT FOR CONFORMANCE WITH ADA ACCESS COMPLIANCE REQUIREMENTS. EXAMPLES OF MINIMUM AND MAXIMUM LIMITS RELATED TO ADA ACCESS COMPLIANCE INCLUDE, BUT ARE NOT LIMITED TO:*
   a) *ACCESSIBLE PATH OF TRAVEL CROSS-SLOPE SHALL NOT EXCEED 2%*
   b) *ACCESSIBLE PATH OF TRAVEL LONGITUDINAL SLOPES SHALL NOT EXCEED 5%*
   c) *RAMP LONGITUDINAL SLOPES SHALL NOT EXCEED 8.33%*
   d) *ACCESSIBLE WALKS SHALL NOT HAVE LESS THAN 48 INCHES IN UNOBSTRUCTED WIDTH*
   e) *ACCESSIBLE PARKING SPACES AND ACCESS AISLES SHALL NOT EXCEED 2% SLOPE IN ANY DIRECTION*
   f) *LANDINGS AT THE TOP AND BOTTOM OF ACCESSIBLE RAMPS SHALL NOT EXCEED 2% SLOPE IN ANY DIRECTION*
   g) *GUTTERS AND ROAD SURFACES DIRECTLY ADJACENT TO AND WITHIN 2 FEET OF A CURB RAMP SHALL HAVE A COUNTER SLOPE NOT TO EXCEED 5%*
3. *CONTRACTOR MUST IMMEDIATELY NOTIFY THE ENGINEER OF RECORD, IDENTIFIED BY THE PROFESSIONAL ENGINEERING SEAL AND SIGNATURE ON THESE PLANS, OF ANY SITE CONDITION(S) AND/OR DESIGN INFORMATION THAT PREVENTS THE CONTRACTOR FROM COMPLYING WITH THE LAWS, REGULATIONS AND/OR BUILDING CODES GOVERNING ADA ACCESS COMPLIANCE.*
4. *GROUND SLOPES AWAY FROM BUILDING PADS IN LANDSCAPED OR DIRT AREAS SHALL BE NO LESS THAN 5% FOR AT LEAST TEN (10) FEET, OR AS OTHERWISE NOTED ON THE PLANS.*
5. *DRAINAGE SHALL NOT BE ALLOWED ONTO ADJACENT PROPERTY.*
6. *ALL FILL MATERIAL USED TO SUPPORT THE FOUNDATIONS OF ANY BUILDING OR STRUCTURE SHALL BE PLACED UNDER THE DIRECTION OF A LICENSED GEOTECHNICAL ENGINEER, AND IN COMPLIANCE WITH THE PROJECT SPECIFICATIONS. A SOILS COMPACTION REPORT SHALL BE SUBMITTED TO THE ENGINEER OF RECORD AS REQUIRED BY THE PROJECT SPECIFICATIONS.*
7. *THE CONTRACTOR SHALL IMPLEMENT DUST CONTROL MEASURES AS REQUIRED BY THE PROJECT SPECIFICATIONS, AND BY GOVERNING PUBLIC AGENCIES.*
8. *THE CONTRACTOR SHALL IMPLEMENT A STORM WATER POLLUTION PREVENTION PLAN (SWPPP) AS REQUIRED BY THE PROJECT SPECIFICATIONS AND THE STATE WATER RESOURCES CONTROL BOARD'S CONSTRUCTION GENERAL PERMIT. IMPLEMENT BEST MANAGEMENT PRACTICES WITHIN PUBLIC RIGHT OF WAY PER LOCAL JURISDICTION REQUIREMENTS.*
9. *AS A FIRST ORDER OF WORK, THE CONTRACTOR SHALL POT HOLE THE EXISTING UTILITY LINES AT THE POINT OF CONNECTION TO VERIFY THE LOCATION, SIZE, PIPE MATERIAL AND ELEVATION SO THAT THE ENGINEER CAN MAKE ELEVATION AND/OR ALIGNMENT ADJUSTMENTS IF NECESSARY. SHOULD POT HOLING DISCOVER ANY DISCREPANCIES, CONTACT THE ENGINEER AND OBTAIN WRITTEN DIRECTION BEFORE PROCEEDING.*
10. *ADJUST UTILITY LIDS WITHIN NEW CONSTRUCTION AREA TO FINISHED GRADE PER DETAIL [C/X1.4]. REPLACE ALL BROKEN LIDS WITH NEW. PROVIDE TRAFFIC RATED LIDS AND BOXES WITHIN AREAS SUBJECT TO VEHICULAR TRAFFIC.*
11. *WATER TEST PAVEMENT WITHIN NEW IMPROVEMENT AREA. REPLACE PAVEMENT WHERE BIRD BATHS OCCUR AFTER TEST AS DIRECTED BY THE INSPECTOR OR ENGINEER.*
12. *MINIMUM SLOPE ON IMPERVIOUS SURFACES PERPENDICULAR TO ADJACENT STRUCTURE(S), WITHIN ADA PATH, SHALL BE 1% MINIMUM AND 2% MAXIMUM. WHERE DOOR AND GATE LANDINGS OCCUR THE CROSS SLOPE SHALL BE 2% MAXIMUM IN ALL DIRECTIONS*

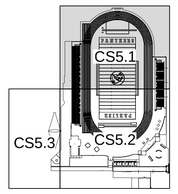

KEYMAP

SCALE: N 1"=20'

0 5 20 40
SCALE IN FEET

811 Know what's below. Call before you dig.

PBK
www.pbk.com
559-449-8400
FRESNO, CA

PARLIER HS STADIUM REPLACEMENT

CLIENT PROJECT NO.: 250093
DSA SUBMISSION
DSA APPL. NO.: 02-124002 DSA FILE NO.: 10-H12

PARLIER UNIFIED SCHOOL DISTRICT

Blair, Church & Flynn CONSULTING ENGINEERS

REGISTERED PROFESSIONAL ENGINEER LYNE R. BYNUM No. 47033 CIVIL STATE OF CALIFORNIA
5-14-26 Date Signed:

CLIENT	
PARLIER UNIFIED SCHOOL DISTRICT	
DATE	PROJECT NUMBER
2026/02/09	250093

DRAWING HISTORY

No.	Description	Date

CHECKED BY: GP

DRAWN BY: SD

PARTIAL GRADING PLAN

CS5.1

Drawing: P:\224224-040\Site\Production\Drawings\224404_GR01.dwg, CS5.1 - ----
Plot by: gpinedo Jun 19, 2026 - 5:01pm

PARTIAL GRADING PLAN
CS5.2

0"
1"

SEE SHEET CS5.1 FOR CONTINUATION

SEE SHEET CS5.3 FOR CONTINUATION

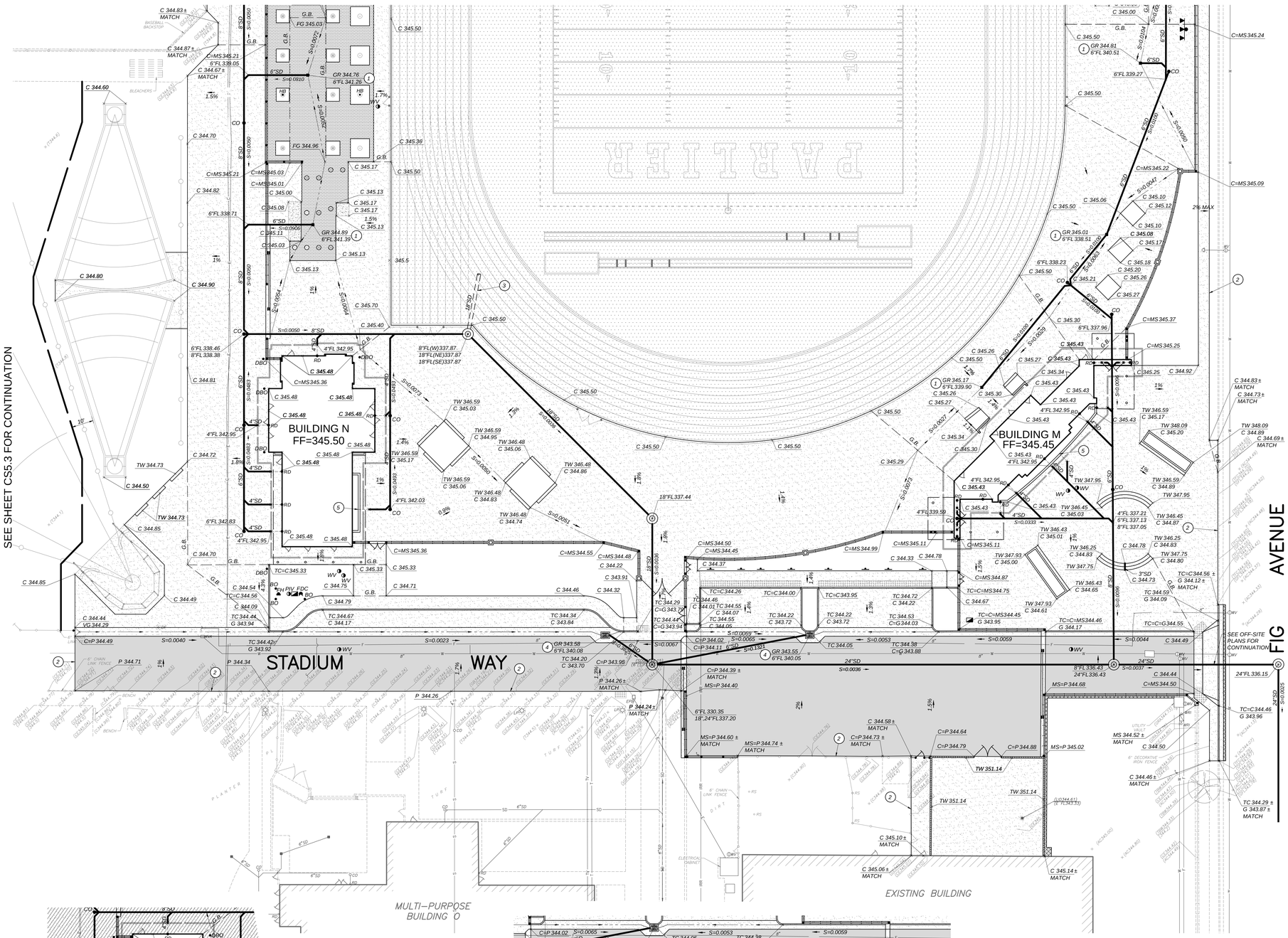

A CS5.2 ADD ALTERNATIVE DEDUCTION 3
1" = 20'

B CS5.2 ADD ALTERNATIVE DEDUCTION 6
1" = 20'

SITE BENCHMARK:

CHISELED "X" ON TOP FACE OF CURB APPROXIMATELY 149' SOUTH OF POWER POLE LOCATED ON NORTHEAST CORNER OF BLEACHER CONCRETE PAD ALONG FIG AVENUE

ELEV.= 345.21 USGS DATUM

GRADING AND DRAINAGE LEGEND:

	SEE ARCHITECTURAL PLANS FOR TRACK AND FIELD IMPROVEMENTS
C	*CONCRETE*
FF	*FINISHED FLOOR*
FG	*FINISHED GRADE*
FL	*FLOWLINE*
G	*GUTTER*
GR	*STORM DRAIN GRATE*
MS	*MOWSTRIP*
P	*PAVEMENT*
TC	*TOP OF CURB*
TW	*TOP OF WALL*
VG	*VALLEY GUTTER FLOWLINE*
(344.9)	*EXISTING ELEVATION*
328.78	*NEW FINISHED GRADE*
	DIRECTION OF SURFACE DRAINAGE
	BUILDING OVER-EXCAVATION LIMITS; SEE DETAIL [B/X1.4]
G.B.	*GRADE BREAK*
	LIMITS OF GRADING
S=0.0050	*PIPE SLOPE AND DIRECTION OF FLOW*
	SWALE AND DIRECTION OF FLOW
1	*P-6 STORM DRAIN INLET PER DETAIL [H/X1.4]*
2	*MATCH NEW CONCRETE ELEVATIONS TO EXISTING CONCRETE ELEVATIONS*
3	*REFER TO PLAYING FIELD PLANS FOR TRACK AND FIELD DRAINAGE*
4	*U-32 STORM DRAIN INLET PER DETAIL [J/X1.4]*
5	*DRAINAGE PIPE, SEE ARCHITECTURAL PLANS*
	STORM DRAIN MANHOLE PER DETAIL [E/X1.4]
CO	*SURFACE CLEANOUT PER DETAIL [G/X1.4]*
RD	*ROOF DRAIN; SEE PLUMBING PLANS*
SD	*STORM DRAIN PIPELINE; SIZE AS NOTED. TRENCH AND BACKFILL PER DETAIL [D/X1.4]*
	POINT OF CONNECTION TO EXISTING OR PROPOSED UTILITY, COORDINATE WITH PLUMBING PLANS PRIOR TO CONNECTION.
S=0.0020	*FLOWLINE SLOPE AND DIRECTION OF FLOW*

GENERAL GRADING AND DRAINAGE NOTES:

THE REQUIREMENTS AND INFORMATION SET OUT BELOW ARE PROVIDED FOR THE CONTRACTOR'S CONVENIENCE AND DO NOT ENCOMPASS ALL PROJECT REQUIREMENTS DESCRIBED BY THE PROJECT PLANS AND SPECIFICATIONS AND/OR APPLICABLE LAWS, REGULATIONS AND/OR BUILDING CODES.

1. *CONSTRUCTION OF ALL PROJECT SITE IMPROVEMENTS SUBJECT TO ADA ACCESS COMPLIANCE, INCLUDING ACCESSIBLE PATH OF TRAVEL, CURB RETURNS, PARKING STALL(S) AND UNLOADING AREAS, BARRIER FREE AMENITIES AND/OR OTHER APPLICABLE SITE IMPROVEMENTS SHALL CONFORM TO THE AMERICANS WITH DISABILITIES ACT, CALIFORNIA TITLE 24, THE CALIFORNIA BUILDING CODE, CURRENT EDITION(S).*
2. *CONTRACTOR SHALL FIELD VERIFY ALL GRADES AND SLOPES PRIOR TO THE PLACEMENT OF CONCRETE AND/OR PAVEMENT FOR CONFORMANCE WITH ADA ACCESS COMPLIANCE REQUIREMENTS. EXAMPLES OF MINIMUM AND MAXIMUM LIMITS RELATED TO ADA ACCESS COMPLIANCE INCLUDE, BUT ARE NOT LIMITED TO:*
   a) *ACCESSIBLE PATH OF TRAVEL CROSS-SLOPE SHALL NOT EXCEED 2%*
   b) *ACCESSIBLE PATH OF TRAVEL LONGITUDINAL SLOPES SHALL NOT EXCEED 5%*
   c) *RAMP LONGITUDINAL SLOPES SHALL NOT EXCEED 8.33%*
   d) *ACCESSIBLE WALKS SHALL NOT HAVE LESS THAN 48 INCHES IN UNOBSTRUCTED WIDTH*
   e) *ACCESSIBLE PARKING SPACES AND ACCESS AISLES SHALL NOT EXCEED 2% SLOPE IN ANY DIRECTION*
   f) *LANDINGS AT THE TOP AND BOTTOM OF ACCESSIBLE RAMPS SHALL NOT EXCEED 2% SLOPE IN ANY DIRECTION*
   g) *GUTTERS AND ROAD SURFACES DIRECTLY ADJACENT TO AND WITHIN 2 FEET OF A CURB RAMP SHALL HAVE A COUNTER SLOPE NOT TO EXCEED 5%*
3. *CONTRACTOR MUST IMMEDIATELY NOTIFY THE ENGINEER OF RECORD, IDENTIFIED BY THE PROFESSIONAL ENGINEERING SEAL AND SIGNATURE ON THESE PLANS, OF ANY SITE CONDITION(S) AND/OR DESIGN INFORMATION THAT PREVENTS THE CONTRACTOR FROM COMPLYING WITH THE LAWS, REGULATIONS AND/OR BUILDING CODES GOVERNING ADA ACCESS COMPLIANCE.*
4. *GROUND SLOPES AWAY FROM BUILDING PADS IN LANDSCAPED OR DIRT AREAS SHALL BE NO LESS THAN 5% FOR AT LEAST TEN (10) FEET, OR AS OTHERWISE NOTED ON THE PLANS.*
5. *DRAINAGE SHALL NOT BE ALLOWED ONTO ADJACENT PROPERTY.*
6. *ALL FILL MATERIAL USED TO SUPPORT THE FOUNDATIONS OF ANY BUILDING OR STRUCTURE SHALL BE PLACED UNDER THE DIRECTION OF A LICENSED GEOTECHNICAL ENGINEER, AND IN COMPLIANCE WITH THE PROJECT SPECIFICATIONS. A SOILS COMPACTION REPORT SHALL BE SUBMITTED TO THE ENGINEER OF RECORD AS REQUIRED BY THE PROJECT SPECIFICATIONS.*
7. *THE CONTRACTOR SHALL IMPLEMENT DUST CONTROL MEASURES AS REQUIRED BY THE PROJECT SPECIFICATIONS, AND BY GOVERNING PUBLIC AGENCIES.*
8. *THE CONTRACTOR SHALL IMPLEMENT A STORM WATER POLLUTION PREVENTION PLAN (SWPPP) AS REQUIRED BY THE PROJECT SPECIFICATIONS AND THE STATE WATER RESOURCES CONTROL BOARD'S CONSTRUCTION GENERAL PERMIT. IMPLEMENT BEST MANAGEMENT PRACTICES WITHIN PUBLIC RIGHT OF WAY PER LOCAL JURISDICTION REQUIREMENTS.*
9. *AS A FIRST ORDER OF WORK, THE CONTRACTOR SHALL POT HOLE THE EXISTING UTILITY LINES AT THE POINT OF CONNECTION TO VERIFY THE LOCATION, SIZE, PIPE MATERIAL AND ELEVATION SO THAT THE ENGINEER CAN MAKE ELEVATION AND/OR ALIGNMENT ADJUSTMENTS IF NECESSARY. SHOULD POT HOLING DISCOVER ANY DISCREPANCIES, CONTACT THE ENGINEER AND OBTAIN WRITTEN DIRECTION BEFORE PROCEEDING.*
10. *ADJUST UTILITY LIDS WITHIN NEW CONSTRUCTION AREA TO FINISHED GRADE PER DETAIL [C/ X1.4]. REPLACE ALL BROKEN LIDS WITH NEW. PROVIDE TRAFFIC RATED LIDS AND BOXES WITHIN AREAS SUBJECT TO VEHICULAR TRAFFIC.*
11. *WATER TEST PAVEMENT WITHIN NEW IMPROVEMENT AREA. REPLACE PAVEMENT WHERE BIRD BATHS OCCUR AFTER TEST AS DIRECTED BY THE INSPECTOR OR ENGINEER.*
12. *MINIMUM SLOPE ON IMPERVIOUS SURFACES PERPENDICULAR TO ADJACENT STRUCTURE(S), WITHIN ADA PATH, SHALL BE 1% MINIMUM AND 2% MAXIMUM. WHERE DOOR AND GATE LANDINGS OCCUR THE CROSS SLOPE SHALL BE 2% MAXIMUM IN ALL DIRECTIONS*

KEYMAP

SCALE: N 1"=20'

0 5 20 40
SCALE IN FEET

Know what's below. Call before you dig.

PBK
www.pbk.com
559-449-8400
FRESNO, CA

PARLIER HS STADIUM REPLACEMENT

603 3rd Street
Parlier, CA 93648

CLIENT PROJECT NO: 250093
DSA SUBMISSION
DSA APPL. NO.: 02-124002 DSA FILE NO.: 10-H12

PARLIER UNIFIED SCHOOL DISTRICT

Blair, Church & Flynn
CONSULTING ENGINEERS

REGISTERED PROFESSIONAL ENGINEER
LANE R. BAKER
No. 47033
CIVIL
STATE OF CALIFORNIA

5-14-26
Date Signed

CLIENT	
PARLIER UNIFIED SCHOOL DISTRICT	
DATE	PROJECT NUMBER
2026/02/09	250093

DRAWING HISTORY

No.	Description	Date

CHECKED BY: GP

DRAWN BY: SD

PARTIAL GRADING PLAN

CS5.2

Drawing: P:\224\224-0404\Site\Production\Drawings\224404_GR01.dwg, CS5.2 - ----
Plot by: gpinedo Jun 19, 2026 - 5:01pm

PARTIAL GRADING PLAN
CS5.3

0"
1"

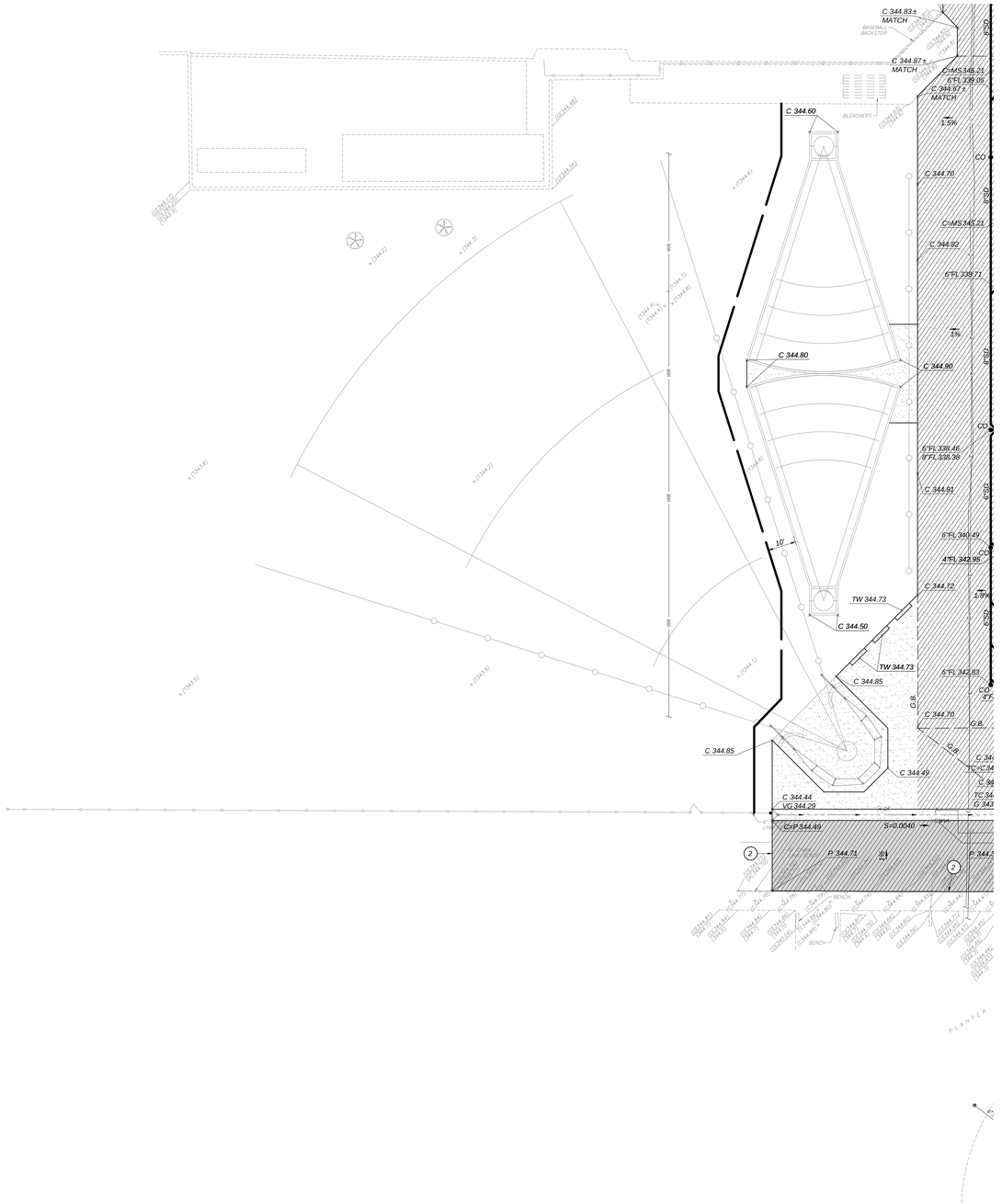

SITE BENCHMARK:

CHISELED "X" ON TOP FACE OF CURB APPROXIMATELY 149' SOUTH OF POWER POLE LOCATED ON NORTHEAST CORNER OF BLEACHER CONCRETE PAD ALONG FIG AVENUE

ELEV.= 345.21 USGS DATUM

GRADING AND DRAINAGE LEGEND:

	SEE ARCHITECTURAL PLANS FOR TRACK AND FIELD IMPROVEMENTS
C	*CONCRETE*
FF	*FINISHED FLOOR*
FG	*FINISHED GRADE*
FL	*FLOWLINE*
G	*GUTTER*
GR	*STORM DRAIN GRATE*
MS	*MOWSTRIP*
P	*PAVEMENT*
TC	*TOP OF CURB*
TW	*TOP OF WALL*
VG	*VALLEY GUTTER FLOWLINE*
(344.9)	*EXISTING ELEVATION*
328.78	*NEW FINISHED GRADE*
	DIRECTION OF SURFACE DRAINAGE
	BUILDING OVER-EXCAVATION LIMITS; SEE DETAIL [B/X1.4]
G.B.	*GRADE BREAK*
	LIMITS OF GRADING
S=0.0050	*PIPE SLOPE AND DIRECTION OF FLOW*
	SWALE AND DIRECTION OF FLOW
1	*P-6 STORM DRAIN INLET PER DETAIL [H/X1.4]*
2	*MATCH NEW CONCRETE ELEVATIONS TO EXISTING CONCRETE ELEVATIONS*
3	*REFER TO PLAYING FIELD PLANS FOR TRACK AND FIELD DRAINAGE*
4	*U-32 STORM DRAIN INLET PER DETAIL [J/X1.4]*
5	*DRAINAGE PIPE, SEE ARCHITECTURAL PLANS*
	STORM DRAIN MANHOLE PER DETAIL [E/X1.4]
CO	*SURFACE CLEANOUT PER DETAIL [G/X1.4]*
RD	*ROOF DRAIN; SEE PLUMBING PLANS*
SD	*STORM DRAIN PIPELINE; SIZE AS NOTED. TRENCH AND BACKFILL PER DETAIL [D/X1.4]*
	POINT OF CONNECTION TO EXISTING OR PROPOSED UTILITY, COORDINATE WITH PLUMBING PLANS PRIOR TO CONNECTION.
S=0.0020	*FLOWLINE SLOPE AND DIRECTION OF FLOW*

GENERAL GRADING AND DRAINAGE NOTES:

THE REQUIREMENTS AND INFORMATION SET OUT BELOW ARE PROVIDED FOR THE CONTRACTOR'S CONVENIENCE AND DO NOT ENCOMPASS ALL PROJECT REQUIREMENTS DESCRIBED BY THE PROJECT PLANS AND SPECIFICATIONS AND/OR APPLICABLE LAWS, REGULATIONS AND/OR BUILDING CODES.

1. *CONSTRUCTION OF ALL PROJECT SITE IMPROVEMENTS SUBJECT TO ADA ACCESS COMPLIANCE, INCLUDING ACCESSIBLE PATH OF TRAVEL, CURB RETURNS, PARKING STALL(S) AND UNLOADING AREAS, BARRIER FREE AMENITIES AND/OR OTHER APPLICABLE SITE IMPROVEMENTS SHALL CONFORM TO THE AMERICANS WITH DISABILITIES ACT, CALIFORNIA TITLE 24, THE CALIFORNIA BUILDING CODE, CURRENT EDITION(S).*
2. *CONTRACTOR SHALL FIELD VERIFY ALL GRADES AND SLOPES PRIOR TO THE PLACEMENT OF CONCRETE AND/OR PAVEMENT FOR CONFORMANCE WITH ADA ACCESS COMPLIANCE REQUIREMENTS. EXAMPLES OF MINIMUM AND MAXIMUM LIMITS RELATED TO ADA ACCESS COMPLIANCE INCLUDE, BUT ARE NOT LIMITED TO:*
   a) *ACCESSIBLE PATH OF TRAVEL CROSS-SLOPE SHALL NOT EXCEED 2%*
   b) *ACCESSIBLE PATH OF TRAVEL LONGITUDINAL SLOPES SHALL NOT EXCEED 5%*
   c) *RAMP LONGITUDINAL SLOPES SHALL NOT EXCEED 8.33%*
   d) *ACCESSIBLE WALKS SHALL NOT HAVE LESS THAN 48 INCHES IN UNOBSTRUCTED WIDTH*
   e) *ACCESSIBLE PARKING SPACES AND ACCESS AISLES SHALL NOT EXCEED 2% SLOPE IN ANY DIRECTION*
   f) *LANDINGS AT THE TOP AND BOTTOM OF ACCESSIBLE RAMPS SHALL NOT EXCEED 2% SLOPE IN ANY DIRECTION*
   g) *GUTTERS AND ROAD SURFACES DIRECTLY ADJACENT TO AND WITHIN 2 FEET OF A CURB RAMP SHALL HAVE A COUNTER SLOPE NOT TO EXCEED 5%*
3. *CONTRACTOR MUST IMMEDIATELY NOTIFY THE ENGINEER OF RECORD, IDENTIFIED BY THE PROFESSIONAL ENGINEERING SEAL AND SIGNATURE ON THESE PLANS, OF ANY SITE CONDITION(S) AND/OR DESIGN INFORMATION THAT PREVENTS THE CONTRACTOR FROM COMPLYING WITH THE LAWS, REGULATIONS AND/OR BUILDING CODES GOVERNING ADA ACCESS COMPLIANCE.*
4. *GROUND SLOPES AWAY FROM BUILDING PADS IN LANDSCAPED OR DIRT AREAS SHALL BE NO LESS THAN 5% FOR AT LEAST TEN (10) FEET, OR AS OTHERWISE NOTED ON THE PLANS.*
5. *DRAINAGE SHALL NOT BE ALLOWED ONTO ADJACENT PROPERTY.*
6. *ALL FILL MATERIAL USED TO SUPPORT THE FOUNDATIONS OF ANY BUILDING OR STRUCTURE SHALL BE PLACED UNDER THE DIRECTION OF A LICENSED GEOTECHNICAL ENGINEER, AND IN COMPLIANCE WITH THE PROJECT SPECIFICATIONS. A SOILS COMPACTION REPORT SHALL BE SUBMITTED TO THE ENGINEER OF RECORD AS REQUIRED BY THE PROJECT SPECIFICATIONS.*
7. *THE CONTRACTOR SHALL IMPLEMENT DUST CONTROL MEASURES AS REQUIRED BY THE PROJECT SPECIFICATIONS, AND BY GOVERNING PUBLIC AGENCIES.*
8. *THE CONTRACTOR SHALL IMPLEMENT A STORM WATER POLLUTION PREVENTION PLAN (SWPPP) AS REQUIRED BY THE PROJECT SPECIFICATIONS AND THE STATE WATER RESOURCES CONTROL BOARD'S CONSTRUCTION GENERAL PERMIT. IMPLEMENT BEST MANAGEMENT PRACTICES WITHIN PUBLIC RIGHT OF WAY PER LOCAL JURISDICTION REQUIREMENTS.*
9. *AS A FIRST ORDER OF WORK, THE CONTRACTOR SHALL POT HOLE THE EXISTING UTILITY LINES AT THE POINT OF CONNECTION TO VERIFY THE LOCATION, SIZE, PIPE MATERIAL AND ELEVATION SO THAT THE ENGINEER CAN MAKE ELEVATION AND/OR ALIGNMENT ADJUSTMENTS IF NECESSARY. SHOULD POT HOLING DISCOVER ANY DISCREPANCIES, CONTACT THE ENGINEER AND OBTAIN WRITTEN DIRECTION BEFORE PROCEEDING.*
10. *ADJUST UTILITY LIDS WITHIN NEW CONSTRUCTION AREA TO FINISHED GRADE PER DETAIL [C/ X1.4]. REPLACE ALL BROKEN LIDS WITH NEW. PROVIDE TRAFFIC RATED LIDS AND BOXES WITHIN AREAS SUBJECT TO VEHICULAR TRAFFIC.*
11. *WATER TEST PAVEMENT WITHIN NEW IMPROVEMENT AREA. REPLACE PAVEMENT WHERE BIRD BATHS OCCUR AFTER TEST AS DIRECTED BY THE INSPECTOR OR ENGINEER.*
12. *MINIMUM SLOPE ON IMPERVIOUS SURFACES PERPENDICULAR TO ADJACENT STRUCTURE(S), WITHIN ADA PATH, SHALL BE 1% MINIMUM AND 2% MAXIMUM. WHERE DOOR AND GATE LANDINGS OCCUR THE CROSS SLOPE SHALL BE 2% MAXIMUM IN ALL DIRECTIONS*

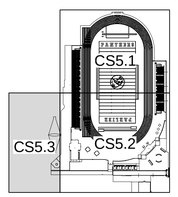

KEYMAP

SCALE: 1"=20'

0 5 20 40
SCALE IN FEET

811 Know what's below. Call before you dig.

PBK
www.pbk.com
559-448-8400
FRESNO, CA

PARLIER HS STADIUM REPLACEMENT

603 3rd Street
Parlier, CA 93648

CLIENT PROJECT NO: 250093
DSA SUBMISSION
DSA APPL. NO.: 02-124002 DSA FILE NO.: 10-H12

PARLIER UNIFIED SCHOOL DISTRICT

Blair, Church & Flynn
CONSULTING ENGINEERS

REGISTERED PROFESSIONAL ENGINEER
LANE R. BARTHEL
No. 47033
CIVIL
STATE OF CALIFORNIA

5-14-26
Date Signed

CLIENT	
PARLIER UNIFIED SCHOOL DISTRICT	
DATE	PROJECT NUMBER
2026/02/09	250093

DRAWING HISTORY

No.	Description	Date

CHECKED BY: GP

DRAWN BY: SD

PARTIAL GRADING PLAN

CS5.3

Drawing: P:\224\224-0404\Site\Production\Drawings\224404_GR01.dwg, CS5.3 ----
Plot by: gpinedo Jun 19, 2026 - 5:01pm

PARTIAL UTILITY PLAN
CS6.1

0"
1"

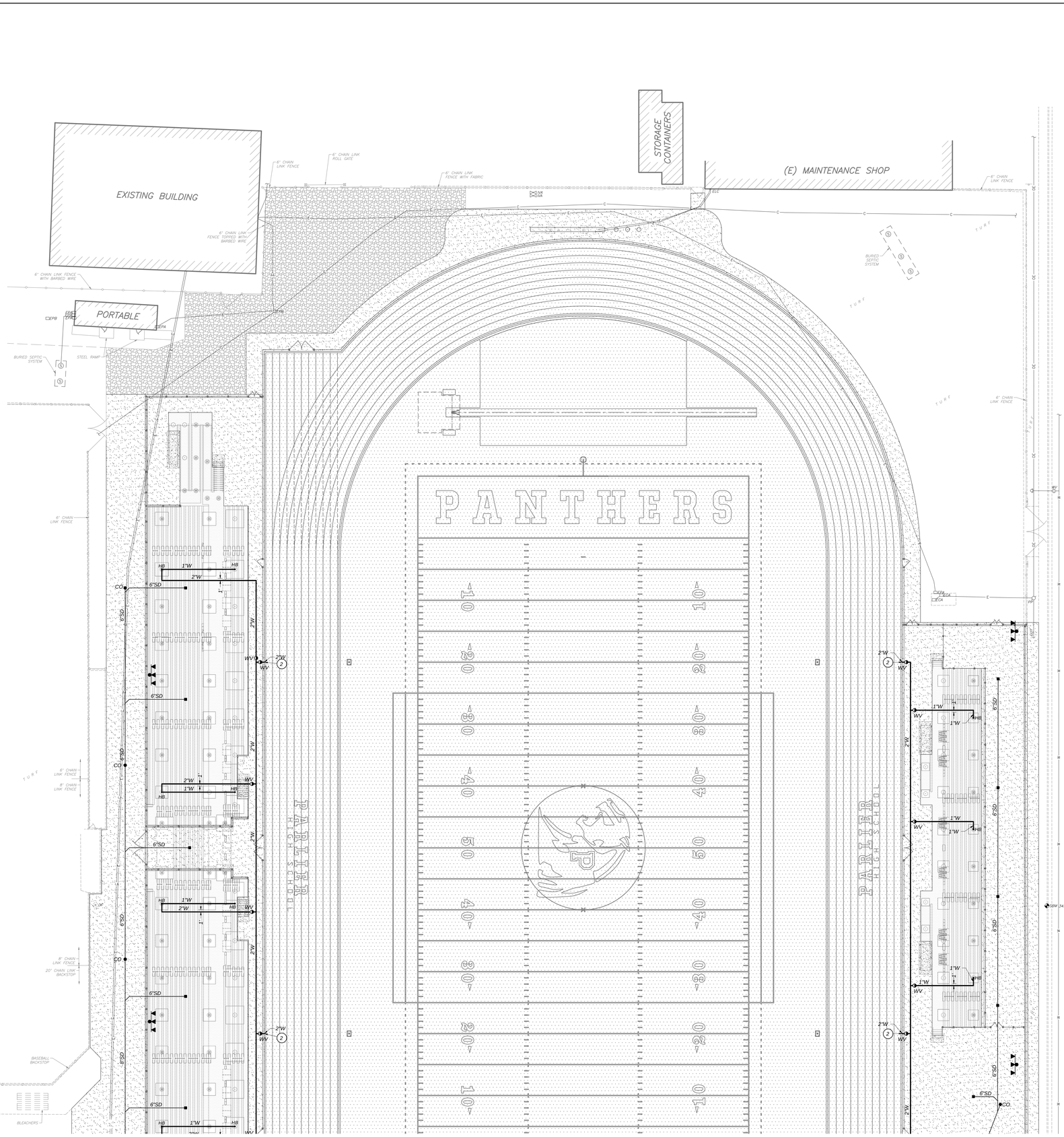

SEE SHEET CS6.2 FOR CONTINUATION

UTILITY LEGEND:

- SEE ARCHITECTURAL PLANS FOR TRACK AND FIELD IMPROVEMENTS
- S — SEWER PIPE, SIZE AS NOTED ON PLANS. PIPE BEDDING AND BACKFILL PER DETAIL [D/X1.4]
- W — WATER PIPE, SIZE AS NOTED ON PLANS, MIN. 30" COVER.
- F — FIRE PIPE, SIZE AS NOTED ON PLANS, MIN. 42" COVER. PIPE BEDDING AND BACKFILL PER [D/X1.4]
- SD — STORM DRAIN PIPE, SEE GRADING PLAN
- FF — FINISHED FLOOR
- FL — FLOWLINE
- BACKFLOW PREVENTER TO BE INSTALLED PER CITY OF PARLIER STD. DWG. W-14
- PIV — EXISTING PIV TO BE REINSTALLED PER CITY OF PARLIER STD. DWG. W-14
- FDC — EXISTING FDC TO BE REINSTALLED PER CITY OF PARLIER STD. DWG. W-14
- CO — SEWER CLEANOUT PER DETAIL [G/X1.4]
- FH — EXISTING FIRE HYDRANT TO BE REINSTALLED PER CITY OF PARLIER STD. DWG. W-2
- HB — HOSE BIBB PER DETAIL [B/X1.5] AND [C/X1.5]
- WV — WATER VALVE PER [I/X1.4]
- CAP END OF UTILITY LINE.
- POINT OF CONNECTION TO EXISTING OR PROPOSED UTILITY, COORDINATE WITH PLUMBING PLANS PRIOR TO CONNECTION.
- S=0.0020 — FLOWLINE SLOPE AND DIRECTION OF FLOW
- (1) CONNECT TO EXISTING WATER LINE WITH WATER-TIGHT COINECTION. VERIFY SIZE, DEPTH, AND LOCATION.
- (2) SEE PLAYING FIELD PLANS FOR CONTINUATION OF WATER LINE.

GENERAL SITE UTILITY NOTES:

1. AS FIRST ORDER OF WORK, CONTRACTOR SHALL POTHOLE EXISTING UTILITIES AND NOTIFY ENGINEER IMMEDIATELY OF LOCATIONS, SIZE AND DEPTH.
2. THE CONTRACTOR SHALL FIELD VERIFY THE EXACT LOCATION, SIZE, DEPTH, AND TYPE OF ALL EXISTING UTILITIES AND INTERFERENCES SITUATED ALONG THE ROUTE OF THE PROPOSED CONSTRUCTION PRIOR TO COMMENCEMENT OF EXCAVATION, FABRICATION, AND INSTALLATION. THE CONTRACTOR SHALL CONSTRUCT ALL IMPROVEMENTS IN SUCH A MANNER AS WILL PROTECT ALL EXISTING UNDERGROUND UTILITIES AND, IN THE EVENT OF ANY CONFLICTS, SHALL NOTIFY THE ENGINEER BEFORE PROCEEDING.
3. SEE IRRIGATION PLANS FOR PROPOSED IRRIGATION PIPE ALIGNMENT.
4. COORDINATE EXACT POINTS OF CONNECTION TO BUILDING PLUMBING AND NOTIFY THE ENGINEER OF ANY CONFLICT SO THAT ADJUSTMENTS CAN BE MADE IF NEEDED.
5. SAWCUT EXISTING CONCRETE IMPROVEMENTS AS NECESSARY TO INSTALL NEW WATER OR SEWER IMPROVEMENTS. CONSTRUCT NEW CONCRETE IMPROVEMENTS TO MATCH ADJACENT CONCRETE IMPROVEMENTS AND JOIN TOGETHER WITH DOWEL BARS PER DETAIL [C/X1.1]
6. INSTALLATION, TYPE, AND MANUFACTURER'S MODELS OF DOMESTIC WATER METERS, DRAIN INLETS/OUTLETS AND OTHER APPURTENANCES OF SITE UTILITY SYSTEMS SHALL BE DONE IN STRICT ACCORDANCE WITH GOVERNING AUTHORITY REQUIREMENTS.
7. LAYOUT OF MATERIALS, EQUIPMENT AND SYSTEMS IS GENERALLY DIAGRAMMATIC UNLESS SPECIFICALLY DIMENSIONED. SOME WORK MAY BE SHOWN OFFSET FOR CLARITY. THE ACTUAL LOCATIONS OF ALL MATERIALS, PIPING, FIXTURES, EQUIPMENT, SUPPORTS, ETC., SHALL BE CAREFULLY PLANNED PRIOR TO INSTALLATION OF ANY WORK TO AVOID ALL INTERFERENCES WITH EACH OTHER OR WITH STRUCTURAL, ELECTRICAL, PLUMBING AND MECHANICAL, ARCHITECTURAL OR ANY OTHER ELEMENTS. ALL CONFLICTS SHALL BE CALLED TO THE ATTENTION OF THE ARCHITECT AND THE ENGINEER PRIOR TO THE INSTALLATION OF ANY WORK OR THE ORDERING OF ANY EQUIPMENT.
8. ANY INSPECTION TO BE MADE BY THE AUTHORITY HAVING JURISDICTION SHALL REQUIRE A MINIMUM OF 24 HOUR NOTICE.
9. PURITY TESTS ARE REQUIRED ON ALL WATER SYSTEM INSTALLATIONS. CONTRACTOR TO COORDINATE WITH THE AUTHORITY HAVING JURISDICTION.
10. IF THE TOP OF THE STEM OF ANY WATER GATE VALVE IS DEEPER THAN 4' BELOW FINISHED PAVEMENT GRADE, THE CONTRACTOR SHALL INSTALL A STEM EXTENSION SO THAT THE TOP OF THE STEM, WITH EXTENSION, SHALL BE NO DEEPER THAN 4' NOR SHALLOWER THAN 2' FROM FINISHED GRADE.
11. BACKFILL UTILITY TRENCHES PER DETAIL [D/X1.4]
12. ADJUST EXISTING UTILITY LIDS TO FINISHED GRADE PER UTILITY COMPANY STANDARDS AND DETAIL [C/X1.4] AND INSTALL TRAFFIC RATED LIDS WHERE LOCATED IN A TRAFFIC AREA.

FIG AVENUE

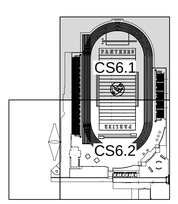

KEYMAP

SCALE: 1"=20'

0 5 20 40
SCALE IN FEET

811 Know what's below. Call before you dig.

PBK
www.pbk.com
559-449-8400
FRESNO, CA

PARLIER HS STADIUM REPLACEMENT

603 3rd Street
Parlier, CA 93648

CLIENT PROJECT NO: 250093
DSA SUBMISSION
DSA APPL. NO.: 02-124002 DSA FILE NO.: 10-H12

PARLIER UNIFIED SCHOOL DISTRICT

Blair, Church & Flynn
CONSULTING ENGINEERS

REGISTERED PROFESSIONAL ENGINEER
LANE B. BAZZELL
No. 47265
CIVIL
STATE OF CALIFORNIA
5-14-26
Date Signed:

CLIENT	
PARLIER UNIFIED SCHOOL DISTRICT	
DATE	PROJECT NUMBER
2026/02/09	250093

DRAWING HISTORY

No.	Description	Date

CHECKED BY: GP
DRAWN BY: SD

PARTIAL UTILITY PLAN

CS6.1

Drawing: P:\224\224-040\Site\Production\Drawings\224040_UTIL01.dwg, CS6.1 ---
Plot by: gpineda Jun 19, 2026 - 5:01pm

PARTIAL UTILITY PLAN
CS6.2

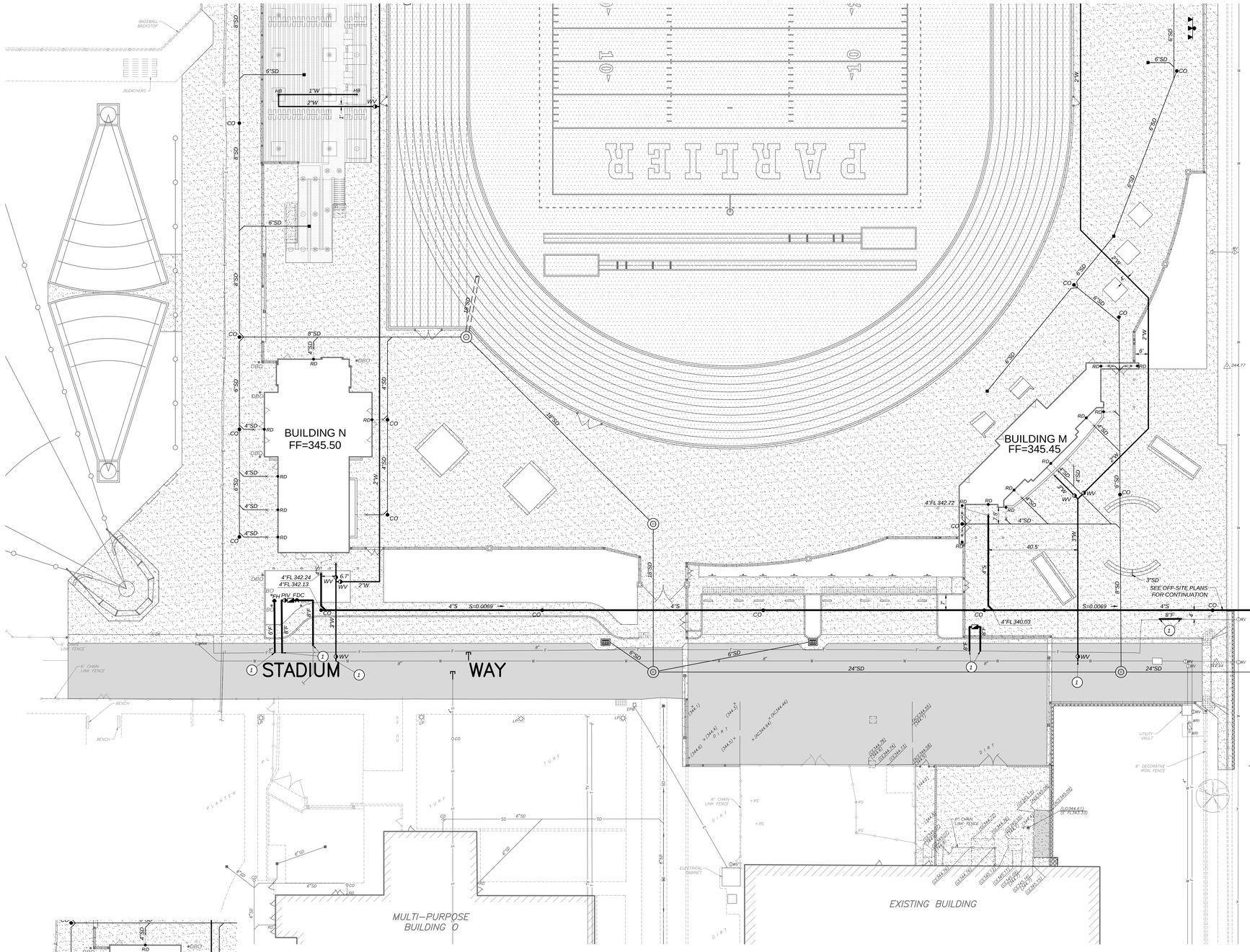

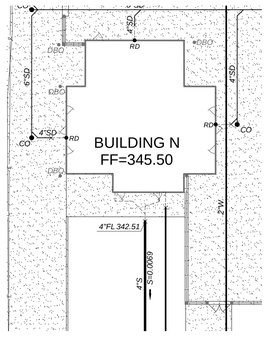

A
CS6.2
ADD ALTERNATIVE DEDUCTION 3
1" = 20'

UTILITY LEGEND:

- SEE ARCHITECTURAL PLANS FOR TRACK AND FIELD IMPROVEMENTS
- S — SEWER PIPE, SIZE AS NOTED ON PLANS. PIPE BEDDING AND BACKFILL PER DETAIL [D/X1.4]
- W — WATER PIPE, SIZE AS NOTED ON PLANS, MIN. 30" COVER.
- F — FIRE PIPE, SIZE AS NOTED ON PLANS, MIN. 42" COVER. PIPE BEDDING AND BACKFILL PER [D/X1.4]
- SD — STORM DRAIN PIPE, SEE GRADING PLAN
- FF — FINISHED FLOOR
- FL — FLOWLINE
- BACKFLOW PREVENTER TO BE INSTALLED PER CITY OF PARLIER STD. DWG. W-14
- PIV — EXISTING PIV TO BE REINSTALLED PER CITY OF PARLIER STD. DWG. W-14
- FDC — EXISTING FDC TO BE REINSTALLED PER CITY OF PARLIER STD. DWG. W-14
- CO — SEWER CLEANOUT PER DETAIL [G/X1.4]
- FH — EXISTING FIRE HYDRANT TO BE REINSTALLED PER CITY OF PARLIER STD. DWG. W-2
- HB — HOSE BIBB PER DETAIL [B/X1.5] AND [C/X1.5]
- WV — WATER VALVE PER [I/X1.4]
- CAP END OF UTILITY LINE.
- POINT OF CONNECTION TO EXISTING OR PROPOSED UTILITY, COORDINATE WITH PLUMBING PLANS PRIOR TO CONNECTION.
- S=0.0020 — FLOWLINE SLOPE AND DIRECTION OF FLOW
- (1) CONNECT TO EXISTING WATER LINE WITH WATER-TIGHT COINNECTION. VERIFY SIZE, DEPTH, AND LOCATION.
- (2) SEE PLAYING FIELD PLANS FOR CONTINUATION OF WATER LINE.

GENERAL SITE UTILITY NOTES:

1. AS FIRST ORDER OF WORK, CONTRACTOR SHALL POTHOLE EXISTING UTILITIES AND NOTIFY ENGINEER IMMEDIATELY OF LOCATIONS, SIZE AND DEPTH.
2. THE CONTRACTOR SHALL FIELD VERIFY THE EXACT LOCATION, SIZE, DEPTH, AND TYPE OF ALL EXISTING UTILITIES AND INTERFERENCES SITUATED ALONG THE ROUTE OF THE PROPOSED CONSTRUCTION PRIOR TO COMMENCEMENT OF EXCAVATION, FABRICATION, AND INSTALLATION. THE CONTRACTOR SHALL CONSTRUCT ALL IMPROVEMENTS IN SUCH A MANNER AS WILL PROTECT ALL EXISTING UNDERGROUND UTILITIES AND, IN THE EVENT OF ANY CONFLICTS, SHALL NOTIFY THE ENGINEER BEFORE PROCEEDING.
3. SEE IRRIGATION PLANS FOR PROPOSED IRRIGATION PIPE ALIGNMENT.
4. COORDINATE EXACT POINTS OF CONNECTION TO BUILDING PLUMBING AND NOTIFY THE ENGINEER OF ANY CONFLICT SO THAT ADJUSTMENTS CAN BE MADE IF NEEDED.
5. SAWCUT EXISTING CONCRETE IMPROVEMENTS AS NECESSARY TO INSTALL NEW WATER OR SEWER IMPROVEMENTS. CONSTRUCT NEW CONCRETE IMPROVEMENTS TO MATCH ADJACENT CONCRETE IMPROVEMENTS AND JOIN TOGETHER WITH DOWEL BARS PER DETAIL [C/X1.1]
6. INSTALLATION, TYPE, AND MANUFACTURER'S MODELS OF DOMESTIC WATER METERS, DRAIN INLETS/OUTLETS AND OTHER APPURTENANCES OF SITE UTILITY SYSTEMS SHALL BE DONE IN STRICT ACCORDANCE WITH GOVERNING AUTHORITY REQUIREMENTS.
7. LAYOUT OF MATERIALS, EQUIPMENT AND SYSTEMS IS GENERALLY DIAGRAMMATIC UNLESS SPECIFICALLY DIMENSIONED. SOME WORK MAY BE SHOWN OFFSET FOR CLARITY. THE ACTUAL LOCATIONS OF ALL MATERIALS, PIPING, FIXTURES, EQUIPMENT, SUPPORTS, ETC., SHALL BE CAREFULLY PLANINED PRIOR TO INSTALLATION OF ANY WORK TO AVOID ALL INTERFERENCES WITH EACH OTHER OR WITH STRUCTURAL, ELECTRICAL, PLUMBING AND MECHANICAL, ARCHITECTURAL OR ANY OTHER ELEMENTS. ALL CONFLICTS SHALL BE CALLED TO THE ATTENTION OF THE ARCHITECT AND THE ENGINEER PRIOR TO THE INSTALLATION OF ANY WORK OR THE ORDERING OF ANY EQUIPMENT.
8. ANY INSPECTION TO BE MADE BY THE AUTHORITY HAVING JURISDICTION SHALL REQUIRE A MINIMUM OF 24 HOUR NOTICE.
9. PURITY TESTS ARE REQUIRED ON ALL WATER SYSTEM INSTALLATIONS. CONTRACTOR TO COORDINATE WITH THE AUTHORITY HAVING JURISDICTION.
10. IF THE TOP OF THE STEM OF ANY WATER GATE VALVE IS DEEPER THAN 4' BELOW FINISHED PAVEMENT GRADE, THE CONTRACTOR SHALL INSTALL A STEM EXTENSION SO THAT THE TOP OF THE STEM, WITH EXTENSION, SHALL BE NO DEEPER THAN 4' NOR SHALLOWER THAN 2' FROM FINISHED GRADE.
11. BACKFILL UTILITY TRENCHES PER DETAIL [D/X1.4]
12. ADJUST EXISTING UTILITY LIDS TO FINISHED GRADE PER UTILITY COMPANY STANDARDS AND DETAIL [C/X1.4] AND INSTALL TRAFFIC RATED LIDS WHERE LOCATED IN A TRAFFIC AREA.

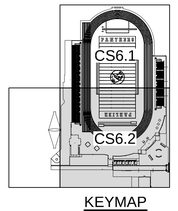

KEYMAP

SCALE: N 1"=20'

0 5 20 40
SCALE IN FEET

811
Know what's below.
Call before you dig.

PBK
www.pbk.com
559-449-8400
FRESNO, CA

PARLIER HS STADIUM REPLACEMENT

CLIENT PROJECT NO. 250093
DSA SUBMISSION
603 3rd Street
Parlier, CA 93648
DSA APPL. NO. - 02:124002 DSA FILE NO. - 10-H12

PARLIER UNIFIED SCHOOL DISTRICT

Blair, Church & Flynn
CONSULTING ENGINEERS

REGISTERED PROFESSIONAL ENGINEER
LANE R. BAILEY
No. 47103
CIVIL
STATE OF CALIFORNIA
5-14-26
Date Signed:

CLIENT	
PARLIER UNIFIED SCHOOL DISTRICT	
DATE	PROJECT NUMBER
2026/02/09	250093

DRAWING HISTORY

No.	Description	Date

CHECKED BY: GP
DRAWN BY: SD

PARTIAL UTILITY PLAN

CS6.2

Drawing: P:\224\224-04\Site\Production\Drawings\224404_UTI01.dwg, CS6.2 ----
Plot by: gjaneda Jun 19, 2026 - 5:01pm

0"
1"

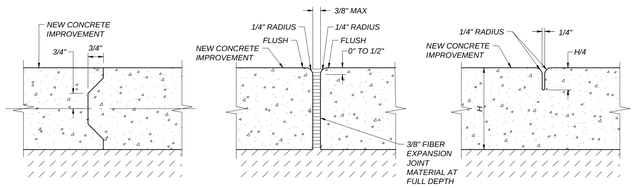

CONSTRUCTION JOINT | EXPANSION JOINT | WEAKENED PLANE JOINT

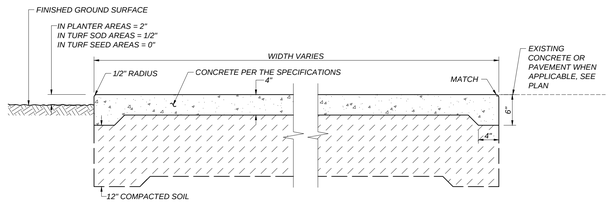

A X1.1 — REGULAR-DUTY CONCRETE
NOT TO SCALE

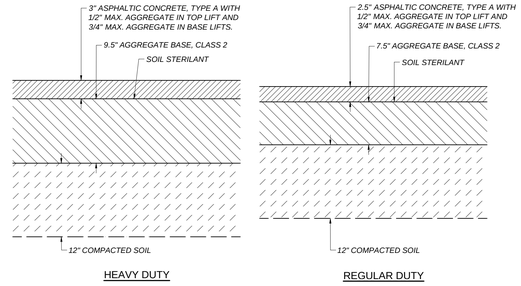

HEAVY DUTY | REGULAR DUTY

B X1.1 — ASPHALT CONCRETE PAVEMENT STRUCTURAL SECTIONS
NOT TO SCALE

NOTES:

1. *DRILL HOLE 1/8" LARGER THAN DOWEL DIAMETER.*
2. *CLEAN HOLE THOROUGHLY OF DUST AND FRAGMENTS WITH WATER, WIRE BRUSH, AND AIR.*
3. *FILL HOLE WITH APPROVED ADHESIVE BEFORE INSERTING DOWEL INTO EXISTING CONCRETE.*
4. *WHERE SMOOTH DOWEL IS USED, APPLY BOND BREAKER TO SIDE IN NEW CONCRETE AS REQUIRED TO ALLOW HORIZONTAL MOVEMENT OF CONCRETE.*
5. *WHERE DEFORMED REBAR DOWEL IS USED, PROVIDE APPROVED WRAP ON SIDE IN NEW CONCRETE AS REQUIRED TO ALLOW HORIZONTAL MOVEMENT OF CONCRETE.*
6. *ANCHOR TESTING NOT REQUIRED*

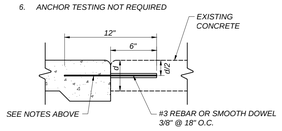

C X1.1 — DOWEL BAR
NOT TO SCALE

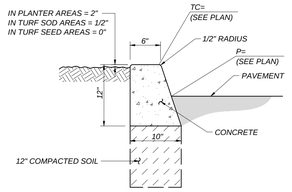

D X1.1 — CONCRETE CURB
NOT TO SCALE

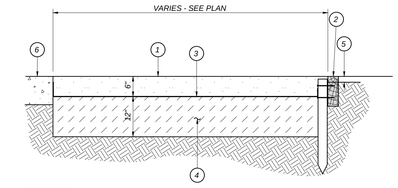

LEGEND

1. *3/4" CRUSHED ROCK DRIVE SURFACE. SEE SPECIFICATIONS FOR MATERIALS AND METHODS. CONTRACTOR TO SUBMIT SAMPLE FOR APPROVAL.*
2. *COMPOSITE WOOD 2x4 HEADER WITH BEVELED JOINTS. SECURE WITH METAL STAKES AT 6' O.C. AND AT EACH SIDE OF JOINT OR CORNER.*
3. *NON-WOVEN GEOTEXTILE FABRIC, MINIMUM 4.0 OZ/SY. WRAP UP 1.5" HIGH ON ALL SIDES OF HEADER.*
4. *SUBGRADE. SCARIFY TO A DEPTH OF 12" MOISTURE CONDITION AND RECOMPACT TO 95% RELATIVE DENSITY.*
5. *FINISH GRADE IN PLANTING AREA SHALL BE 2" BELOW TOP OF HEADER FOR MULCH, 0.5" BELOW FOR TURF SOD, FLUSH FOR TURF SEED OR STOLONS.*
6. *ADJACENT PAVED SURFACE OR CURB. WHERE CRUSHED ROCK IS ADJACENT TO WALKABLE SURFACE, TOP OF CRUSHED ROCK IS TO BE LEVEL WITH PAVEMENT'S FINISH SURFACE.*

E X1.1 — CRUSHED ROCK DRIVE SURFACE
NOT TO SCALE

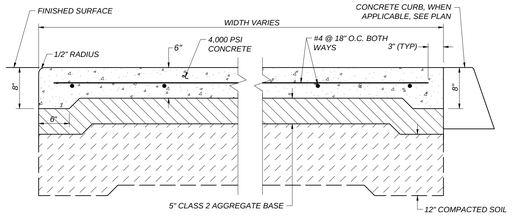

F X1.1 — HEAVY DUTY CONCRETE PAVEMENT STRUCTURAL SECTION
NOT TO SCALE

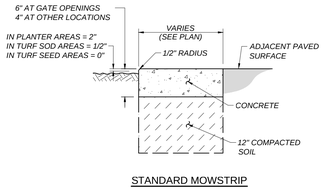

STANDARD MOWSTRIP

G X1.1 — CONCRETE MOWSTRIP
NOT TO SCALE

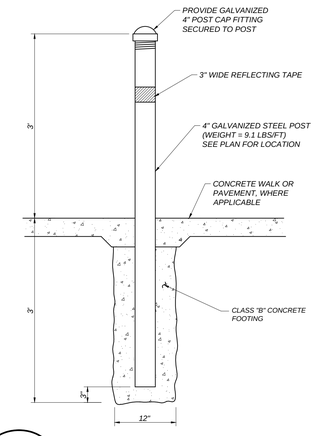

H X1.1 — FIXED PROTECTION POST
NOT TO SCALE

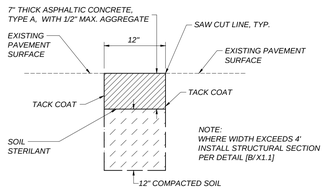

I X1.1 — ASPHALT CONCRETE PLUG
NOT TO SCALE

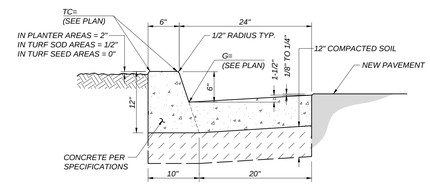

J X1.1 — CONCRETE CURB AND GUTTER
NOT TO SCALE

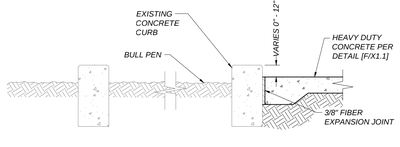

K X1.1 — VERTICAL CURB DETAIL
NOT TO SCALE

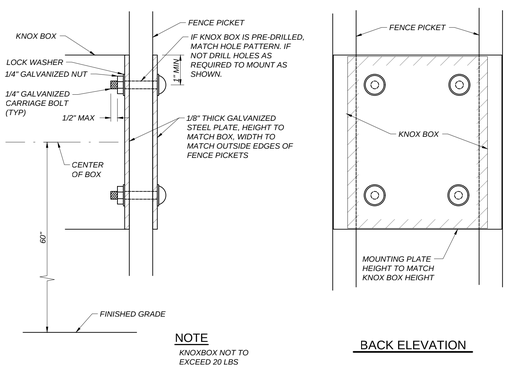

NOTE
KNOXBOX NOT TO EXCEED 20 LBS

BACK ELEVATION

L X1.1 — KNOX BOX MOUNTING DETAIL
NOT TO SCALE

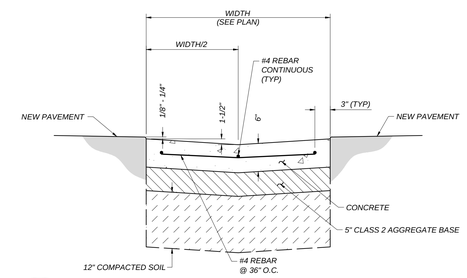

M X1.1 — REINFORCED CONCRETE VALLEY GUTTER
NOT TO SCALE

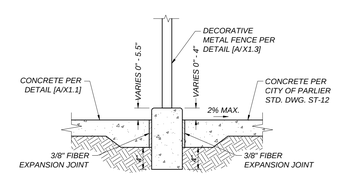

N X1.1 — CROSS SECTION AT NEW FENCE
NOT TO SCALE

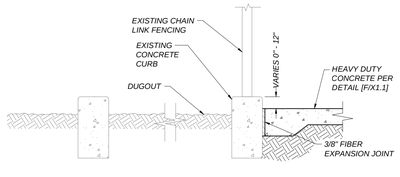

O X1.1 — VERTICAL CURB DETAIL
NOT TO SCALE

PBK
www.pbk.com
559-449-8400
FRESNO, CA

PARLIER HS STADIUM REPLACEMENT

603 3rd Street
Parlier, CA 93648

CLIENT PROJECT NO: 250093
DSA SUBMISSION
DSA APPL. NO.: 02-124002 DSA FILE NO.: 10-H12

PARLIER UNIFIED SCHOOL DISTRICT

Blair, Church & Flynn
CONSULTING ENGINEERS

REGISTERED PROFESSIONAL ENGINEER
LANE R. BADGER
No. 47033
CIVIL
STATE OF CALIFORNIA
5-14-26
Date Signed

CLIENT	
PARLIER UNIFIED SCHOOL DISTRICT	
DATE	PROJECT NUMBER
2026/02/09	250093

DRAWING HISTORY

No.	Description	Date

CHECKED BY: GP
DRAWN BY: SD

DETAILS

X1.1

Drawing: P:\224\224-0404\Site\ProductionDrawings\224404_DT01.dwg; X1.1 -
Plot by: gpinedo Jun 19, 2026 - 5:01pm

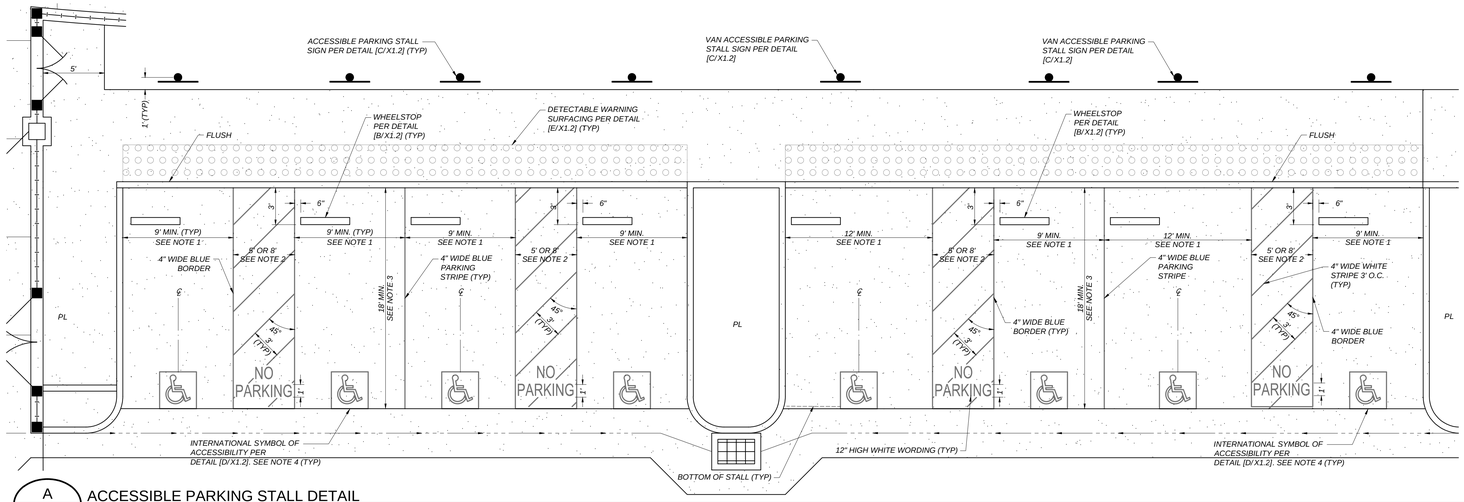

NOTES:

1. ACCESSIBLE STALLS SHALL BE A MINIMUM OF 9' WIDE AND MEASURED FROM THE CENTERLINE OF PARKING STALLS AND ACCESS AISLES. SEE SITE PLAN FOR ACTUAL DIMENSIONS.
2. ACCESS AISLES SHALL BE A MINIMUM OF 5', OR 8' WHEN ADJACENT TO A VAN ACCESSIBLE STALL. SEE SITE PLAN FOR LOCATION AND ACTUAL DIMENSIONS.
3. ACCESSIBLE STALLS SHALL BE A MINIMUM OF 18' LONG. SEE SITE PLAN FOR ACTUAL DIMENSIONS.
4. CENTERLINE OF INTERNATIONAL SYMBOL OF ACCESSIBILITY SHALL BE A MAXIMUM OF 6' FROM THE CENTERLINE OF THE STALL, AND THE BOTTOM SHALL BE ALIGNED WITH THE BOTTOM OF THE STALL.
5. SLOPES AT ACCESSIBLE STALLS AND ACCESS AISLES SHALL NOT EXCEED 2% IN ANY DIRECTION.

A X1.2 ACCESSIBLE PARKING STALL DETAIL
NOT TO SCALE

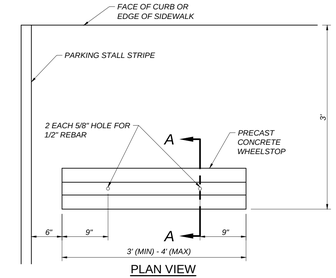

PLAN VIEW

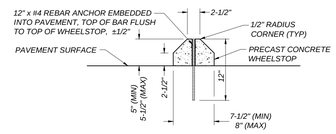

SECTION A-A

B X1.2 TYPICAL WHEELSTOP
NOT TO SCALE

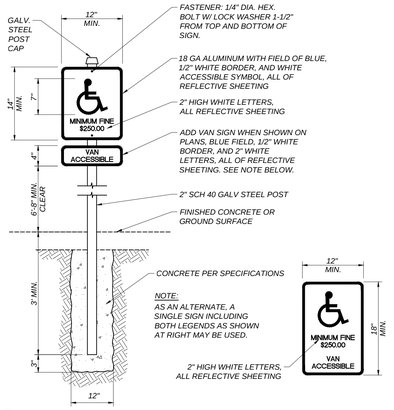

C X1.2 ACCESSIBLE PARKING STALL SIGN
NOT TO SCALE

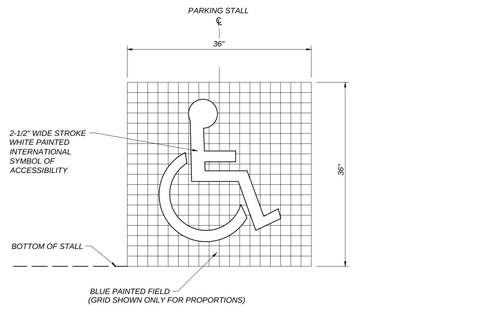

D X1.2 ACCESSIBLE SYMBOL
NOT TO SCALE

NOTES:

1. THE DETECTABLE WARNING SURFACE SHALL BE YELLOW AND APPROXIMATE FS 33538 OF SAE AMSSTD-595A.
2. WHERE DETECTABLE WARNING SURFACE DOES NOT PROVIDE A 70% CONTRAST WITH ADJACENT WALKING SURFACES, A 1-INCH WIDE MINIMUM VISUALLY CONTRASTING SURFACE SHALL SEPARATE THE DETECTABLE WARNING FROM THE ADJACENT SURFACE.
3. THE DOMES SHALL BE MANUFACTURED BY ARMOR TILE INC. OR APPROVED EQUAL.
4. ONLY APPROVED DSA/AC DETECTABLE WARNING PRODUCTS AND DIRECTIONAL SURFACES SHALL BE INSTALLED AS PROVIDED IN THE CALIFORNIA CODE OF REGULATIONS (CCR), TITLE 24, PART 1, CHAPTER 5, ARTICLES 2, 3 AND 4.

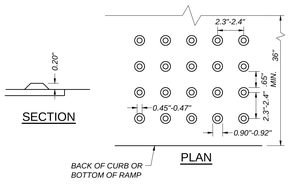

SECTION

PLAN

BACK OF CURB OR BOTTOM OF RAMP

E X1.2 DETECTABLE WARNING SURFACE
NOT TO SCALE

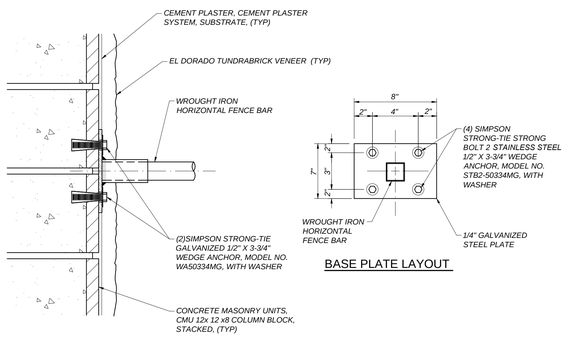

BASE PLATE LAYOUT

F X1.2 FENCE ATTACHMENTS
NOT TO SCALE

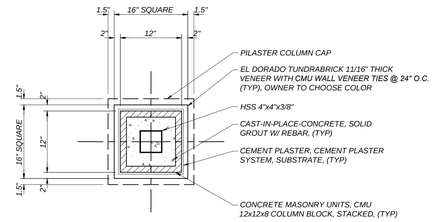

PLAN VIEW

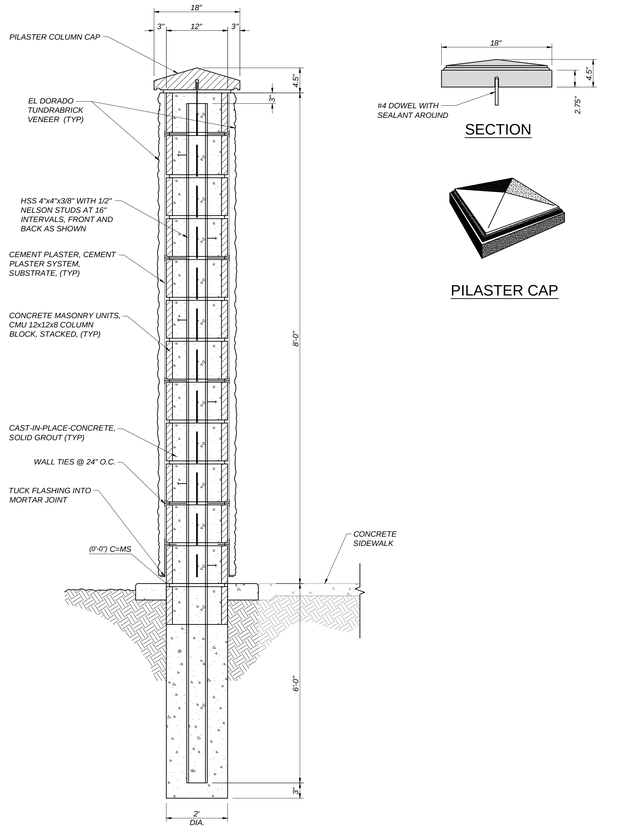

SECTION

SECTION

PILASTER CAP

G X1.2 FENCE COLUMN
NOT TO SCALE

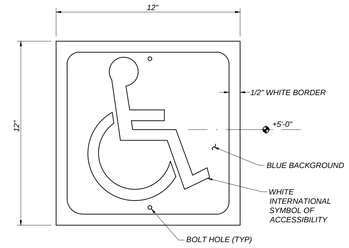

NOTES:

1. SIGN BY "STOP SIGNS AND MORE", MODEL SKU:PAR-1124 WITH WEATHER AND GRAFFITI PROTECTION OR APPROVED EQUAL.
2. BACKING PLATE 12"x12"x16 GAUGE METAL PLATE, SANDWICH CHAIN LINK FABRIC BETWEEN SIGN AND BACKING PLATE. FASTEN TOGETHER WITH TAMPER RESISTANT THRU BOLTS SIMILAR TO DETAIL [I/X1.2].

H X1.1 ENTRY ACCESSIBILITY SIGN
NOT TO SCALE

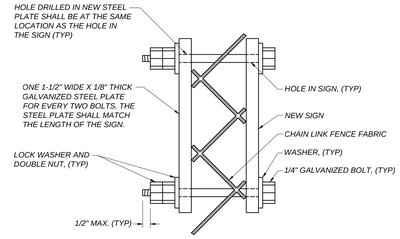

I X1.2 SIGN MOUNTING DETAIL
NOT TO SCALE

PBK
www.pbk.com
559-448-8400
FRESNO, CA

PARLIER HS STADIUM REPLACEMENT

CLIENT PROJECT NO: 250093
DSA SUBMISSION
DSA APPL. NO.: 02-124002 DSA FILE NO.: 10-H12

PARLIER UNIFIED SCHOOL DISTRICT

Blair, Church & Flynn
CONSULTING ENGINEERS

REGISTERED PROFESSIONAL ENGINEER
LANE R. BAZZACCO
No. 47033
CIVIL
STATE OF CALIFORNIA
5-14-26
Date Signed:

CLIENT
PARLIER UNIFIED SCHOOL DISTRICT

DATE	PROJECT NUMBER
2026/02/09	250093

DRAWING HISTORY

No.	Description	Date

CHECKED BY: GP
DRAWN BY: SD

DETAILS

X1.2

Drawing: P:\24\224\224-040#\Str\ProductionDrawings\224404_DT01.dwg;X1.2 - ----
Plot by: gjimede Jun 19, 2026 - 5:01pm

DETAILS
X1.3

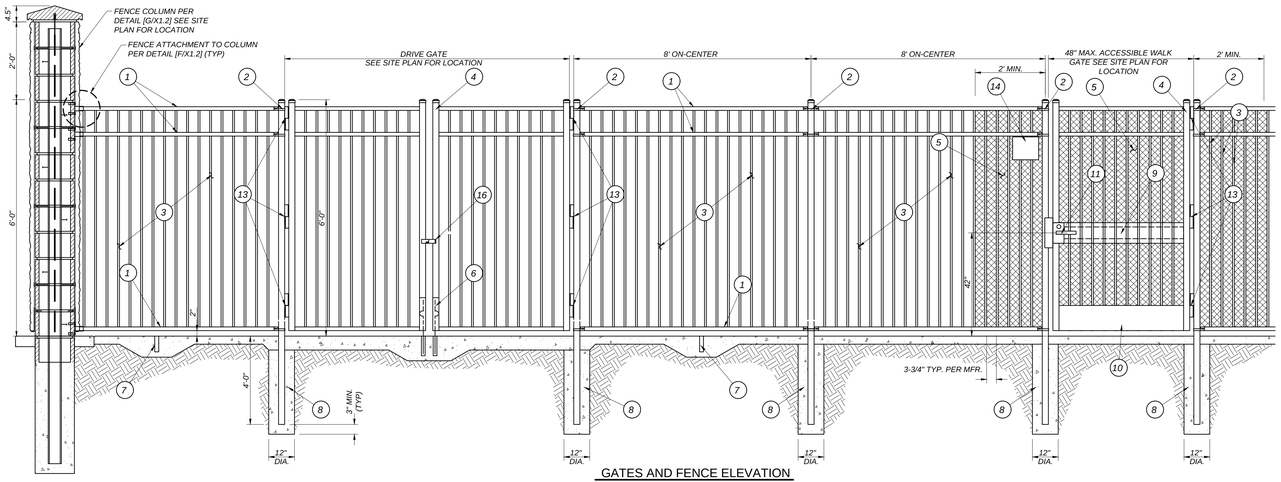

GATES AND FENCE ELEVATION

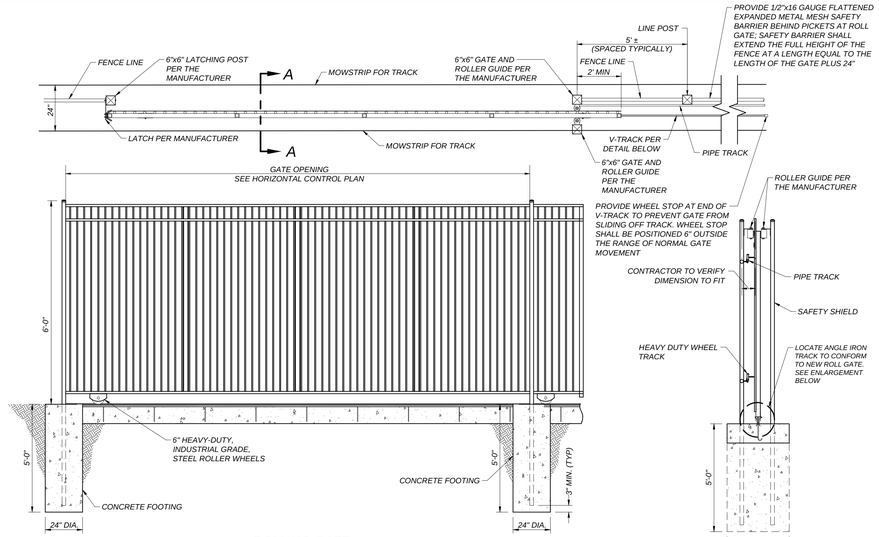

ROLLING GATE

SECTION A-A

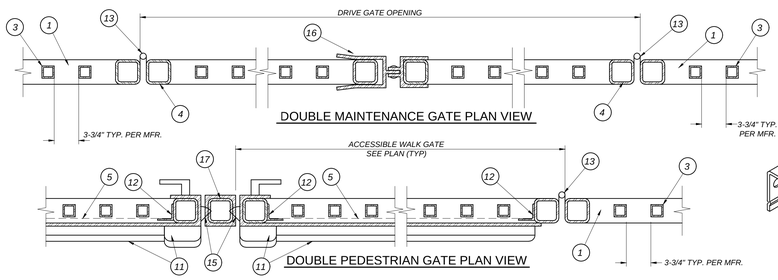

DOUBLE MAINTENANCE GATE PLAN VIEW

DOUBLE PEDESTRIAN GATE PLAN VIEW

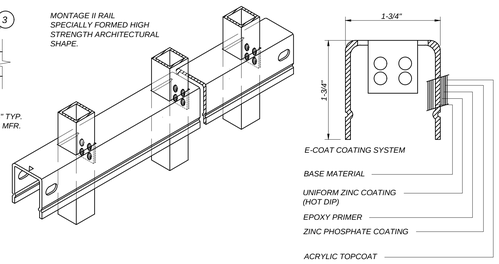

DECORATIVE METAL FENCE AND GATE LEGEND:

1. 1-3/4"W x 1-3/4"H x 12GA. HORIZONTAL RAILING FENCE PER THE MANUFACTURER
2. 12GA. TUBE STEEL POST PER MANUFACTURER; LINE POSTS AND GATE POSTS SIZED PER THE MANUFACTURER
3. 1" SQ. x 14GA. STEEL PICKETS PER MANUFACTURER
4. METAL GATE FRAME PER MANUFACTURER
5. FLATTENED EXPANDED METAL 1/2"X16 GA.
6. DROP ROD DETAIL PER DETAIL BELOW
7. INSTALL GATE HOLDBACK FOR ALL GATES.
8. CONCRETE FOOTING, TYPICAL.
9. 12" HIGH, CENTER ON LATCH, 1/8" THICK STEEL PLATES WELDED ON BOTH SIDES, THE FULL WIDTH OF THE GATE. PROVIDE A WELDED CAP TOP AND BOTTOM TO CLOSE OFF THE CAVITY. THE PLATE AND WELDS SHALL BE POWDER COATED TO MATCH FENCE.
10. 10" HIGH, 1/8" THICK STEEL PLATES WELDED ON BOTH SIDES OF THE GATE AT BOTTOM, FULL WIDTH OF THE GATE. PROVIDE A WELDED CAP TOP AND BOTTOM TO CLOSE OFF THE CAVITY. THE KICK PLATE AND WELDS SHALL BE POWDER COATED TO MATCH FENCE.
11. ALL PEDESTRIAN WALK GATES SHALL HAVE ADA/CBC COMPLIANT ACCESSIBLE HARDWARE WHEN LOCATED WITHIN ACCESSIBLE PATH OF TRAVEL. GATE LATCH SHALL REQUIRE A MAXIMUM OF 5 LBS OF PRESSURE TO OPERATE. HARDWARE PER THE SPECIFICATIONS
12. 1" x 1" x 1/8" METAL ANGLE WELD WITH METAL GATE FRAME
13. HINGES PER THE SPECIFICATIONS
14. ACCESSIBLE GATE SIGN PER DETAIL [H/X1.2]
15. STRIKE PLATE
16. ALL MAINTENANCE GATES SHALL HAVE LOCKABLE GATE LATCH.
17. REMOVABLE MULLION POST PER DETAIL TO RIGHT

FENCE AND GATE NOTES:

1. FENCE TO BE AMERISTAR MONTAGE II MAJESTIC STYLE FENCING OR APPROVED EQUAL. CONTRACTOR TO COORDINATE PLACEMENT OF STEEL POSTS FOR FENCING WHICH OCCURS ADJACENT TO BUILDINGS, COLUMNS OR BLOCK WALLS PLACING CONCRETE. VERIFY CLEAR OPENINGS IN FIELD PRIOR TO CONSTRUCTION.
2. FENCE PANEL SYSTEM SHALL BE INDUSTRIAL GRADE.
3. MOWSTRIP THICKNESS AT GATE OPENINGS TO BE 6" THICK.
4. CONTRACTOR TO PROVIDE AND INSTALL GATE HOLDBACK FOR EACH GATE. HOLDBACK TO BE INSTALLED IN FENCE MOWSTRIP UNLESS OTHERWISE NOTED.
5. ALL ACCESSIBLE GATES SHALL HAVE:
   a. LEVER TYPE LATCH (HANDLES, PULLS, LATCHES, LOCKS AND OTHER OPERABLE PARTS ON DOORS AND GATES SHALL COMPLY ADA. OPERABLE PARTS OF SUCH HARDWARE SHALL BE 34 INCHES MINIMUM AND 44 INCHES MAXIMUM ABOVE THE FINISH FLOOR OR GROUND.
   b. SWINGING DOOR AND GATE SURFACES WITHIN 10 INCHES OF THE FINISH FLOOR OR GROUND MEASURED VERTICALLY SHALL HAVE A SMOOTH SURFACE ON THE PUSH SIDE EXTENDING THE FULL WIDTH OF THE DOOR OR GATE. PARTS CREATING HORIZONTAL OR VERTICAL JOINTS IN THESE SURFACES SHALL BE WITHIN 1/16 INCH OF THE SAME PLANE AS THE OTHER AND BE FREE OF SHARP OR ABRASIVE EDGES. CAVITIES CREATED BY ADDED KICK PLATES SHALL BE CAPPED.

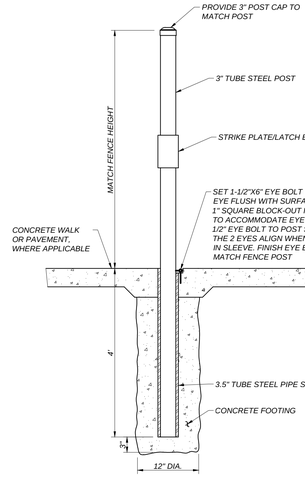

MULLION POST FOOTING

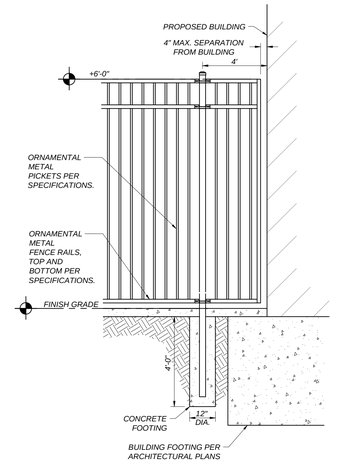

FENCE AT BUILDING

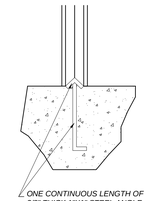

ENLARGEMENT

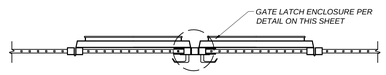

PLAN VIEW

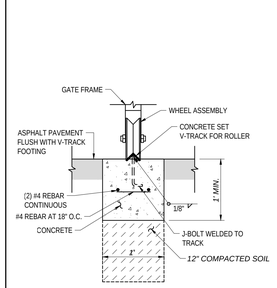

V- TRACK

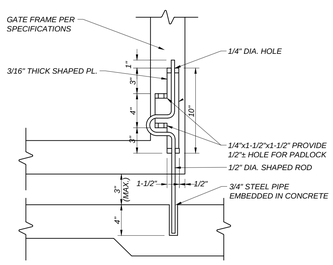

DROP ROD

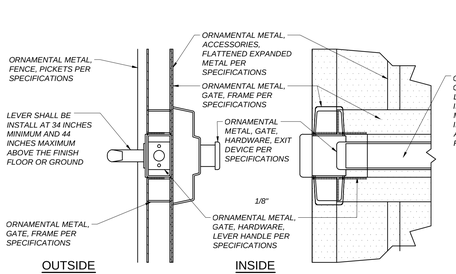

GATE LATCH

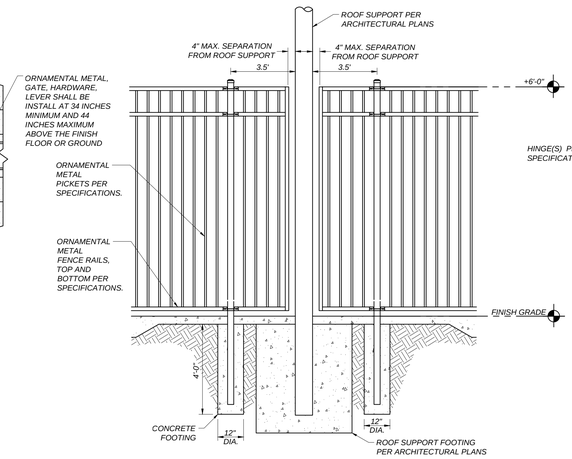

FENCE AT ROOF SUPPORT

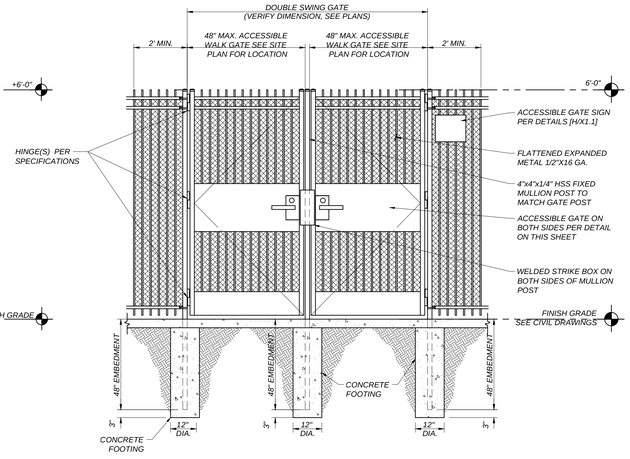

ACCESSIBLE GATE

A
X1.3
DECORATIVE METAL FENCE
NOT TO SCALE

PBK
www.pbk.com
559-448-8400
FRESNO, CA

PARLIER HS STADIUM REPLACEMENT

CLIENT PROJECT NO: 250093
DSA SUBMISSION
603 3rd Street
Parlier, CA 93648
DSA APPL. NO.: 02-124002 DSA FILE NO.: 10-H12

PARLIER UNIFIED SCHOOL DISTRICT

Blair, Church & Flynn
CONSULTING ENGINEERS

REGISTERED PROFESSIONAL ENGINEER
LANE R. BARTHEL
No. 47033
CIVIL
STATE OF CALIFORNIA
5-14-26
Date Signed

CLIENT	
PARLIER UNIFIED SCHOOL DISTRICT	
DATE	PROJECT NUMBER
2026/02/09	250093

DRAWING HISTORY

No.	Description	Date

CHECKED BY: GP

DRAWN BY: SD

DETAILS

X1.3

Drawing: P:\224\224-0454\Site\ProductionDrawings\224404_DT01.dwg; X1.3 - ----
Plot by: gpineda Jun 19, 2026 - 5:07pm

DETAILS
X1.4

0"
1"

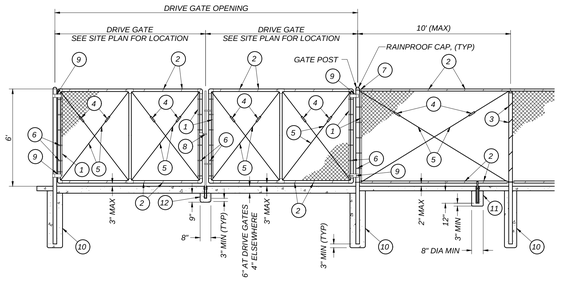

DOUBLE MAINTENANCE GATE

CHAIN LINK FENCE SIZING SCHEDULE - SLATTED FABRIC					
FENCE HEIGHT	END, ANGLE, CORNER AND WALK GATE POST	LINE POST	FOOTING SIZE MIN. DIAMETER	FOOTING POST MIN. EMBEDMENT DEPTH	COMMENT
6'	2.875" O.D.	2.375" O.D.	12"	48"	1.66" O.D. TOP AND BOTTOM RAIL, SCHEDULE 40

SLATTED FABRIC CHAIN LINK FENCE AND GATE LEGEND:

1. 1/8" X 3/4" GALVANIZED STEEL STRETCHER BAR.
2. 9 GAUGE (0.148" DIA) GALVANIZED STEEL TIE WIRES OR HOG RINGS AT 15" MAXIMUM SPACING. MINIMUM OF 8 TIE WIRES PER EACH 10' HORIZONTAL RAIL.
3. 6 GAUGE (0.192" DIA) GALVANIZED STEEL POST CLIPS AT 14" MAXIMUM SPACING. MINIMUM 5 POST CLIPS FOR EACH 6' POST.
4. GALVANIZED ADJUSTABLE TURNBUCKLE FOR 3/8" DIAMETER TRUSS ROD.
5. 3/8" DIAMETER GALVANIZED STEEL ADJUSTABLE TRUSS ROD. TRUSS RODS REQUIRED FOR ALL GATE POST PANELS, END OR CORNER POST PANELS.
6. 1/8" THICK GALVANIZED STEEL STRETCHER BAR TENSION BAND AT 12" MAXIMUM SPACING. MINIMUM OF 7 TENSION BANDS FOR EACH 6' POST SECTION.
7. GALVANIZED RAIL ENDS.
8. CENTER GATE DROP POST AND FORK LATCH
9. HINGES PER THE SPECIFICATION.
10. CONCRETE FOOTING, TYPICAL.
11. INSTALL GATE HOLDBACK FOR ALL GATES.
12. GALVANIZED STEEL PIPE SLEEVE FOR GATE DROP ROD.

SLATTED FABRIC CHAIN LINK FENCE AND GATE NOTES:

1. GATE FRAME SHALL BE 2" O.D. GALVANIZED STEEL (2.72 LB/FT).
2. 3-1/2" X 5" X 9 GAUGE GALVANIZED FENCE FABRIC WITH PRE-INSERTED HIGH-DENSITY POLYETHYLENE (HDPE) SLATS FABRIC KNUCKLED TOP AND BOTTOM. GALVANIZE BEFORE WEAVING, 1.2 OZ TYPE II CLASS. COLOR SELECTED BY OWNER.
3. ALL FENCES ADJACENT TO ATHLETIC FIELDS, COURTS, BALLFIELDS, OR RUNNING TRACKS SHALL HAVE 1.66" O.D. BOTTOM RAILS INSTEAD OF TENSION WIRE
4. MATCH OWNER'S LOCKSET GATE HARDWARE AND KEYING SYSTEM FOR ALL KEYED GATES.
5. WALK GATE POST SIZE LIMITED TO 6 FOOT WIDTH OR LESS. SEE DRIVE GATE SIZING FOR LARGER LEAF WIDTHS.
6. DOUBLE TRUSS RODS ARE REQUIRED IN PANELS ADJACENT TO GATE POSTS AND AT ALL FENCE CORNERS AND END PANELS.
7. ALL GATE CORNERS AND SUPPORT POINTS SHALL BE FASTENED TOGETHER AND REINFORCED WITH MALLEABLE IRON FITTINGS DESIGNED FOR THAT PURPOSE. WELDED CONNECTIONS WILL NOT BE ALLOWED.
8. TACK WELD ALL GATE HINGES AND LATCH COLLARS TO POST.
9. ALL AREAS AFFECTED BY WELDING, TRIMMED ENDS OF BOLTS, STRETCHER BARS, TRUSS RODS OR ANY EXPOSED STEEL SHALL BE PAINTED (GALVANIZED) PER CONTRACT SPECIFICATIONS.
10. CONTRACTOR TO PROVIDE AND INSTALL GATE HOLDBACK FOR EACH GATE. HOLDBACK TO BE INSTALLED IN FENCE MOWSTRIP UNLESS OTHERWISE NOTED.
11. CHAIN LINK FENCING AND GATES ARE EXEMPT FROM DSA STRUCTURAL SAFETY APPROVAL PER DSA IR A-22 SECTION 1.2.1
12. FOR ACCESSIBLE GATE HARDWARE, SEE DETAIL [A/X1.3]

A X1.4 — 6' HIGH SLATTED CHAIN LINK FENCE, (PRIVACYLINK)
NOT TO SCALE

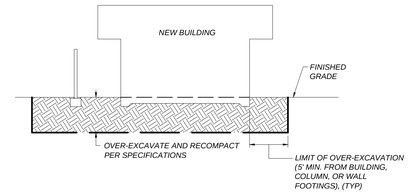

B X1.4 — OVER-EXCAVATION
NOT TO SCALE

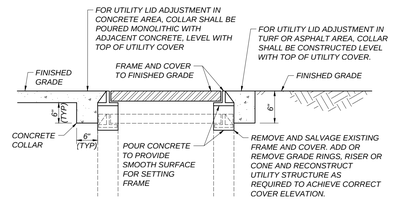

C X1.4 — ADJUST UTILITY LID
NOT TO SCALE

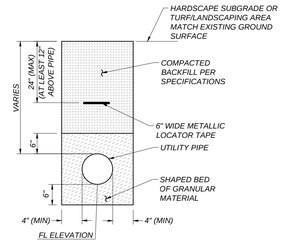

D X1.4 — TRENCH DETAIL FOR UTILITY LINES
NOT TO SCALE

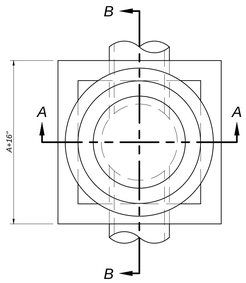

NOTES:

1. PRECAST PIPE, ADJUSTING RINGS AND TAPERED SECTIONS SHALL BE CONSTRUCTED IN ACCORDANCE WITH A.S.T.M. C-478, USING TYPE II CEMENT.
2. ALL JOINTS BETWEEN PRECAST SECTIONS SHALL BE MORTARED.
3. INTERIOR OF THE MANHOLE SHALL HAVE A SMOOTH TROWELED SURFACE. (WOOD TROWEL).
4. IF THE DISTANCE BETWEEN THE FLOW LINE OF THE MANHOLE AND THE FINISH GRADE OF THE LID IS GREATER THAN OR EQUAL TO 12 FEET, THE MANHOLE IS TO BE CONSTRUCTED WITH STEPS.

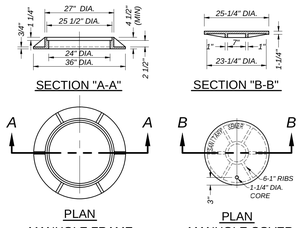

NOTES:

1. ALL DIMENSIONS ARE FINISHED DIMENSIONS.
2. MATERIAL SHALL BE CAST IRON.
3. FRAME AND COVER TO BE CONSTRUCTED IN ACCORDANCE WITH A.S.T.M. DESIGNATION A48, CLASS 25.
4. MANHOLE COVER DESIGN, AS A MINIMUM, IS TO HAVE THE WORDS "STORM SEWER" OR "STORM DRAIN" MOLDED INTO THE COVER, AS APPROPRIATE.
5. GRATE OPENINGS SHALL BE 1/2" MAXIMUM WHERE LOCATED WITHIN THE PEDESTRIAN PATH OF TRAVEL.
6. INSTALL SLOTTED GRATE SO SLOTS ARE PARALLEL WITH THE DIRECTION OF SURFACE DRAINAGE FLOW.

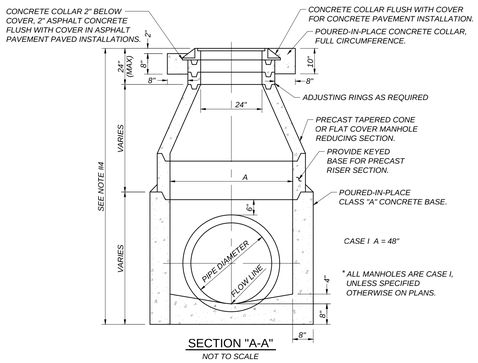

E X1.4 — STORM DRAIN MANHOLE
NOT TO SCALE

F X1.4 — MANHOLE FRAME AND LID
NOT TO SCALE

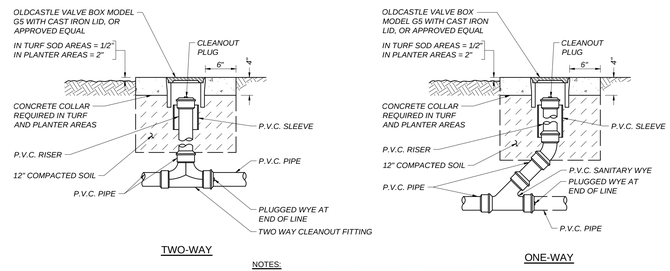

NOTES:

1. USE ONE-WAY CLEANOUTS AT ALL ANGLE POINTS
2. TWO-WAY CLEANOUTS AT ALL OTHER LOCATIONS
3. 6" THICK CONCRETE COLLAR IN VEHICULAR TRAFFIC AREAS

G X1.4 — SURFACE CLEANOUT
NOT TO SCALE

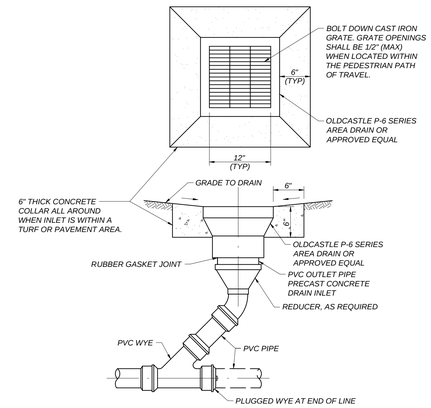

H X1.4 — P-6 SERIES AREA DRAIN
NOT TO SCALE

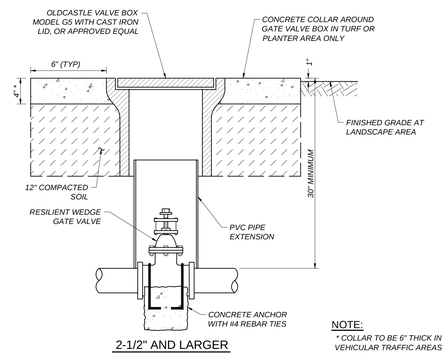

NOTE:
* COLLAR TO BE 6" THICK IN VEHICULAR TRAFFIC AREAS

I X1.4 — WATER VALVE AND LID
NOT TO SCALE

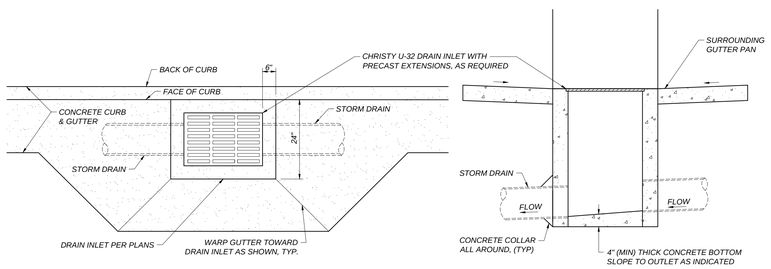

J X1.4 — U-32 DRAIN INLET WITH CONCRETE COLLAR
NOT TO SCALE

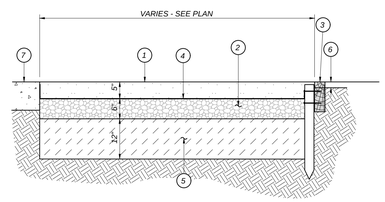

LEGEND

1. STABILIZED DECOMPOSED GRANITE SURFACE. SEE SPECIFICATIONS FOR MATERIALS AND METHODS. CONTRACTOR TO SUBMIT SAMPLE FOR APPROVAL.
2. 3/4" MAX TYPE 2 AGGREGATE BASE, COMPACTED TO 95%.
3. COMPOSITE WOOD 2x4 HEADER WITH BEVELED JOINTS. SECURE WITH METAL STAKES AT 6' O.C. AND AT EACH SIDE OF JOINT OR CORNER.
4. NON-WOVEN GEOTEXTILE FABRIC, MINIMUM 4.0 OZ/SY. WRAP UP 1.5" HIGH ON ALL SIDES OF HEADER.
5. SUBGRADE. SCARIFY TO A DEPTH OF 12" MOISTURE CONDITION AND RECOMPACT TO 95% RELATIVE DENSITY.
6. FINISH GRADE IN PLANTING AREA SHALL BE 2" BELOW TOP OF HEADER FOR MULCH, 0.5" BELOW FOR TURF SOD, FLUSH FOR TURF SEED OR STOLONS.
7. ADJACENT PAVED SURFACE OR CURB. WHERE DG IS ADJACENT TO WALKABLE SURFACE, TOP OF DG IS TO BE LEVEL WITH PAVEMENT'S FINISH SURFACE.

K X1.4 — STABILIZED DECOMPOSED GRANITE SURFACE
NOT TO SCALE

PBK
www.pbk.com
559-448-8400
FRESNO, CA

PARLIER HS STADIUM REPLACEMENT

CLIENT PROJECT NO: 250093
DSA SUBMISSION
DSA APPL. NO.: 02-124002 DSA FILE NO.: 10-H12

603 3rd Street
Parlier, CA 93648

PARLIER UNIFIED SCHOOL DISTRICT

Blair, Church & Flynn
CONSULTING ENGINEERS

REGISTERED PROFESSIONAL ENGINEER
LANE R. BAZZELL
No. 47033
CIVIL
STATE OF CALIFORNIA
5-14-26
Date Signed:

CLIENT
PARLIER UNIFIED SCHOOL DISTRICT

DATE	PROJECT NUMBER
2026/02/09	250093

DRAWING HISTORY

No.	Description	Date

CHECKED BY: GP
DRAWN BY: SD

DETAILS

X1.4

Drawing: P:\24\0224-0404\Site\ProductionDrawings\224404_DT01.dwg; X1.4 ----
Plot by: gjlinede Jun 19, 2026 - 5:01pm

DETAILS
X1.5

0"
1"

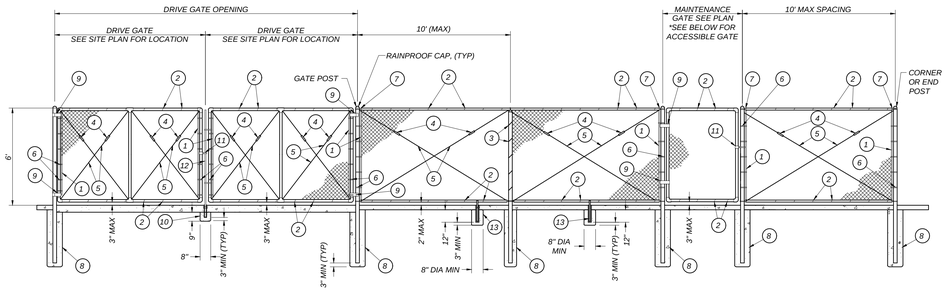

FENCE AND GATE ELEVATIONS

OPEN FABRIC CHAIN LINK FENCE AND GATE LEGEND:

1. *1/8" X 3/4" GALVANIZED STEEL STRETCHER BAR.*
2. *9 GAUGE (0.148" DIA) GALVANIZED STEEL TIE WIRES OR HOG RINGS AT 15" MAXIMUM SPACING. MINIMUM OF 8 TIE WIRES PER EACH 10' HORIZONTAL RAIL.*
3. *6 GAUGE (0.192" DIA) GALVANIZED STEEL POST CLIPS AT 14" MAXIMUM SPACING. MINIMUM 3 POST CLIPS FOR EACH 4' POST.*
4. *GALVANIZED ADJUSTABLE TURNBUCKLE FOR 3/8" DIAMETER TRUSS ROD.*
5. *3/8" DIAMETER GALVANIZED STEEL ADJUSTABLE TRUSS ROD. TRUSS RODS REQUIRED FOR ALL GATE POST PANELS, END OR CORNER POST PANELS.*
6. *1/8" THICK GALVANIZED STEEL STRETCHER BAR TENSION BAND AT 12" MAXIMUM SPACING. MINIMUM OF 4 TENSION BANDS FOR EACH 4' POST SECTION.*
7. *GALVANIZED RAIL ENDS.*
8. *CONCRETE FOOTING, TYPICAL.*
9. *HINGES PER THE SPECIFICATION.*
10. *GALVANIZED STEEL PIPE SLEEVE FOR GATE DROP ROD.*
11. *LOCKABLE FORK LATCH PER SPECIFICATIONS*
12. *CENTER GATE DROP POST AND LATCH*
13. *INSTALL GATE HOLDBACK FOR ALL GATES.*

OPEN FABRIC CHAIN LINK FENCE AND GATE NOTES:

1. *GATE FRAME SHALL BE 2" O.D. GALVANIZED STEEL (2.72 LB/FT).*
2. *FENCE FABRIC SHALL BE 2" X 2" MESH X 9 GAUGE GALVANIZED FENCE FABRIC WITH KNUCKLED TOP AND BOTTOM SELVAGE. FENCE FABRIC TO BE GALVANIZED BEFORE WEAVING (GBW)*
3. *ALL FENCES ADJACENT TO ATHLETIC FIELDS, COURTS, BALLFIELDS, OR RUNNING TRACKS SHALL HAVE 1.66" O.D. BOTTOM RAILS INSTEAD OF TENSION WIRE*
4. *MATCH OWNER'S LOCKSET GATE HARDWARE AND KEYING SYSTEM FOR ALL KEYED GATES.*
5. *WALK GATE POST SIZE LIMITED TO 6 FOOT WIDTH OR LESS. SEE DRIVE GATE SIZING FOR LARGER LEAF WIDTHS.*
6. *DOUBLE TRUSS RODS ARE REQUIRED IN PANELS ADJACENT TO GATE POSTS AND AT ALL FENCE CORNERS AND END PANELS.*
7. *ALL GATE CORNERS AND SUPPORT POINTS SHALL BE FASTENED TOGETHER AND REINFORCED WITH MALLEABLE IRON FITTINGS DESIGNED FOR THAT PURPOSE. WELDED CONNECTIONS WILL NOT BE ALLOWED.*
8. *TACK WELD ALL GATE HINGES AND LATCH COLLARS TO POST.*
9. *ALL AREAS AFFECTED BY WELDING, TRIMMED ENDS OF BOLTS, STRETCHER BARS, TRUSS RODS OR ANY EXPOSED STEEL SHALL BE PAINTED (GALVANIZED) PER CONTRACT SPECIFICATIONS.*
10. *CONTRACTOR TO PROVIDE AND INSTALL GATE HOLDBACK FOR EACH GATE. HOLDBACK TO BE INSTALLED IN FENCE MOWSTRIP UNLESS OTHERWISE NOTED.*
11. *CHAIN LINK FENCING AND GATES ARE EXEMPT FROM DSA STRUCTURAL SAFETY APPROVAL PER DSA IR A-22 SECTION 1.2.1*

CHAIN LINK FENCE SIZING SCHEDULE - OPEN FABRIC

FENCE HEIGHT	END, ANGLE, CORNER POSTS			LINE POSTS			SINGLE LEAF MAN GATE POSTS			DOUBLE GATE POSTS			COMMENT
	POST DIAMETER	FOOTING DIAMETER	FOOTING DEPTH	POST DIAMETER	FOOTING DIAMETER	FOOTING DEPTH	POST DIAMETER	FOOTING DIAMETER	FOOTING DEPTH	POST DIAMETER	FOOTING DIAMETER	FOOTING DEPTH	
6'	*2-7/8" O.D.*	*12"*	*4'-0"*	*2-3/8" O.D.*	*12"*	*3'-3"*	*2-7/8" O.D.*	*12"*	*4'-0"*	*4" O.D.*	*15"*	*5'-0"*	*1.66" O.D. TOP AND BOTTOM RAIL, SCHEDULE 40*

A X1.5 CHAIN LINK FENCE AND GATES
NOT TO SCALE

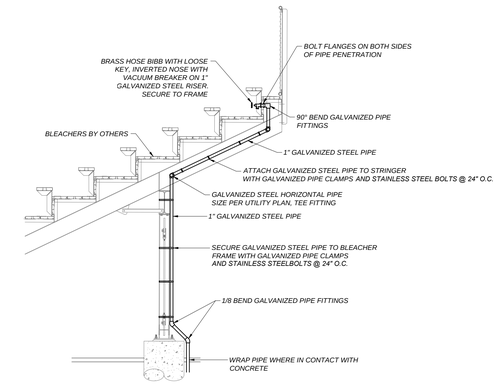

B X1.5 HOSE BIBB AT VISITOR SIDE BLEACHERS
NOT TO SCALE

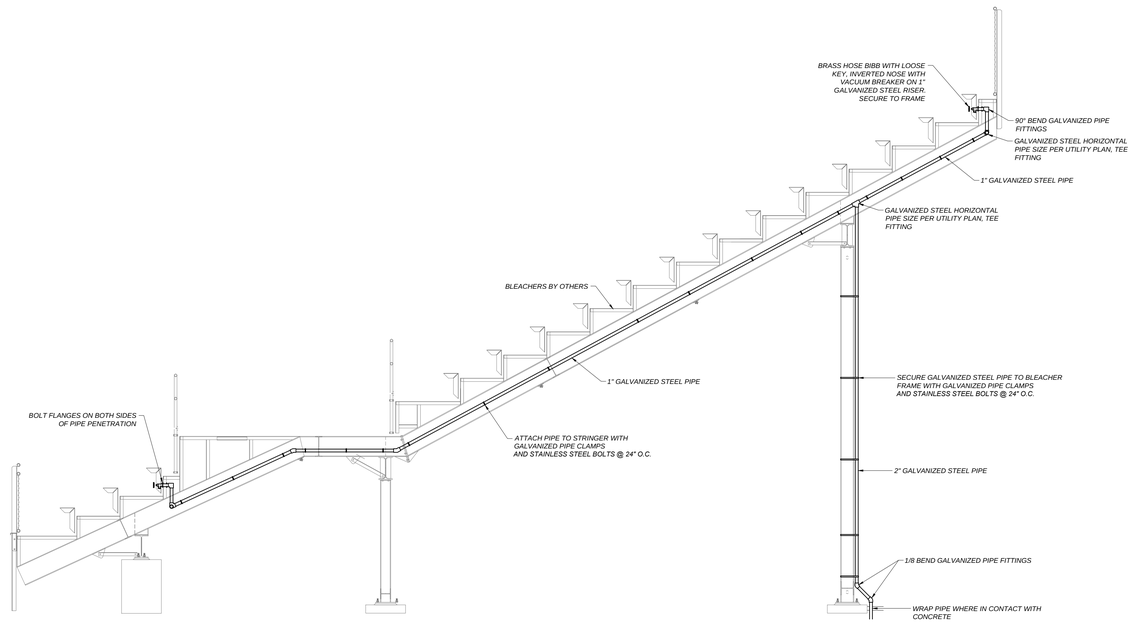

C X1.5 HOSE BIBB AT HOME SIDE BLEACHERS
NOT TO SCALE

PBK
www.pbk.com
559-449-8400
FRESNO, CA

PARLIER HS STADIUM REPLACEMENT

603 3rd Street
Parlier, CA 93648

CLIENT PROJECT NO: 250093
DSA SUBMISSION
DSA APPL. NO.: 02-124002 DSA FILE NO.: 10-H12

PARLIER UNIFIED SCHOOL DISTRICT

Blair, Church & Flynn
CONSULTING ENGINEERS

REGISTERED PROFESSIONAL ENGINEER
LANE R. BARTLETT
No. 47033
CIVIL
STATE OF CALIFORNIA

5-14-26
Date Signed

CLIENT	
PARLIER UNIFIED SCHOOL DISTRICT	
DATE: 2026/02/09	PROJECT NUMBER: 250093

DRAWING HISTORY

No.	Description	Date

CHECKED BY: GP
DRAWN BY: SD

DETAILS

X1.5

Drawing: P:\224\224-0404\Site\ProductionDrawings\224404_DT01.dwg, X1.5 - ----
Plot by: gpinedo , Jun 19, 2026 - 5:01pm

PARTIAL IRRIGATION PLAN
LS1.1

0" 1"

POINT OF CONNECTION

MAXIMUM STATION FLOW: 75 GPM

IRRIGATION WATER SOURCE: PROPOSED CITY WATER SOURCE PER A/CS5.2

STATIC PRESSURE H/L: 80 PSI. SEE IRRIGATION GENERAL NOTE #3

DESIGN OPERATING PRESSURE: 45 PSI ROTATING STREAM SPRAY
30 PSI BUBBLERS
25 PSI DRIP



A / CS5.2 — PROPOSED SERVICE CONNECTION - PRESSURE TANK
1" = 20'

A-4	A-3	A-2	A-1
1½" 24.7	1½" 75	1½" 7.5	1½" 30

A-6	A-5
1" 12.1	1" 6

EXISTING BUILDING

PORTABLE

STORAGE CONTAINERS

(E) MAINTENANCE SHOP

(E) 4" MAIN LINE

A POC

PANTHERS

PARLIER HIGH SCHOOL

SEE SHEET LS1.2 FOR CONTINUATION

IRRIGATION LEGEND: *UNLESS NOTED OTHERWISE, ADJUSTABLE NOZZLE FLOW IS BASED ON A HALF-CIRCLE ARC.*

SYMBOL	MANUFACTURER/MODEL/DESCRIPTION	ARC	PSI	GPM	RADIUS	DETAIL
	RAIN BIRD R-VAN14 RD-04-S-P45-F RV-14	ADJ	45	0.63	14'	J/LS1.4
	RAIN BIRD R-VAN14 RD-04-S-P45-F RV-14F	360	45	1.27	14'	J/LS1.4
	RAIN BIRD R-VAN18 RD-04-S-P45-F RV-18	ADJ	45	1.01	17'	J/LS1.4
	RAIN BIRD R-VAN18 RD-04-S-P45-F RV-18F	360	45	**1.88**	17'	J/LS1.4
	RAIN BIRD R-VAN24 RD-04-S-P45-F RV-24	ADJ	45		23'	J/LS1.4
-•-	TREE BUBBLER 1401 RAIN BIRD 1804-SAM-PRS-1400 FLOOD	360	30	0.25	3'	K/LS1.4

SYMBOL	MANUFACTURER/MODEL	PSI	1.88 GPM	RADIUS	DETAIL
25	HUNTER I-20-04-PRB-MPR 25	45	3.81	25'	N/LS1.4
35	HUNTER I-20-04-PRB-MPR 35	45		35'	N/LS1.4
W	HUNTER I-25-04 07	60	7.5	48'	N/LS1.4

SYMBOL	MANUFACTURER/MODEL/DESCRIPTION	DETAIL
	DRIP CONTROL ZONE KIT TORO 700DK-1-MF	A/LS1.5
	FLUSH VALVE ASSEMBLY	E/LS1.5
DP	DRIP OPERATION INDICATOR HUNTER ECO-ID	D/LS1.5
	AREA TO RECEIVE DRIPLINE NETAFIM TLCV-04-18 TECHLINE PRESSURE COMPENSATING 17MM LANDSCAPE DRIPLINE WITH CHECK VALVE. 0.4 GPH EMITTERS AT 18" O.C. DRIPLINE LATERALS SPACED AT 18" APART, WITH EMITTERS OFFSET FOR TRIANGULAR PATTERN. MINIMUM 3" COVER	C/LS1.5

SYMBOL	MANUFACTURER/MODEL/DESCRIPTION	DETAIL
	REMOTE CONTROL VALVE TORO 100P-G	H/LS1.4
	REMOTE CONTROL VALVE HUNTER ICV-G	/
	QUICK COUPLER, 1" RAIN BIRD 44-LRC	I/LS1.4
	GATE VALVE MATCH PIPE SIZE	F/LS1.4
MV	MASTER VALVE 6" GRISWOLD 2000	O/LS1.4
XCA	EXISTING CONTROLLER "A" HUNTER X2-1400	
WS	RAIN SENSOR HUNTER RAIN-CLIK, MOUNT +10' AFG ON SHED ROOF EAVE (25' CABLE). RUN CABLE IN 1" ELECTRICAL PVC CONDUIT.	M/LS1.4
FS	FLOW SENSOR FLOWMAC QS200 INSERTION ULTRASONIC FLOWMETER	P/LS1.4
SB	SPLICE BOX	L/LS1.4
	IRRIGATION LATERAL LINE: PVC SCHEDULE 40, BELL END, 24" DEEP, SOLVENT WELD, SIZE AS NOTED	C/LS1.4
	IRRIGATION MAINLINE: PVC CLASS 200 SDR 21 36" DEEP, RUBBER GASKETED, BELL-END, SIZE AS NOTED.	A/LS1.4
	IRRIGATION MAINLINE: PVC C900 36" DEEP, RUBBER GASKETED, BELL-END, SIZE AS NOTED.	A/LS1.4
	PIPE SLEEVE: PVC SCHEDULE 40 TWICE PIPE SIZE	D/LS1.4
	DRIPLINE MANIFOLD: PVC SCHEDULE 40	B/LS1.5
	CONTROL WIRE PLUS ONE (1) COMMON WIRE IN CONDUIT	E/LS1.4

— VALVE NUMBER
#" — VALVE FLOW (GPM)
— VALVE SIZE

NUMBER OF SPARE CONTROL WIRE PLUS ONE (1) SPARE COMMON WIRE. PROVIDE A 10 FOOT LOOP IN VALVE BOX

\+ PROPOSED TREE, SEE PLANTING PLAN ON SHEET L201 FOR VARIETY AND SIZE

(A) CONNECT NEW MAIN LINE TO EXISTING MAIN LINE

(B) CONNECT NEW LATERAL LINE TO EXISTING LATERAL LINE

(C) PIPE SHOWN OUTSIDE OF PLANTER FOR CLARITY. INSTALL PIPE WITHIN PLANTER. SEE GENERAL IRRIGATION NOTE #8

(D) EXISTING VALVES SCHEDULED TO REMAIN OPERATIONAL ON EXISTING MAIN LINE. PROVIDE NEW CONTROL WIRE AS NEEDED

(E) CONNECT NEW MAIN LINE TO PROPOSED QUICK COUPLER MAIN LINE. SEE PLAYING FIELD SITE PLAN FOR LOCATION

(F) PROTECT HEADS FOR NEW HARDSCAPE. ADJUST HEADS/NOZZLES FOR NEW IMPROVEMENTS. SEE GENERAL IRRIGATION NOTE #17

(G) PIPE CHANGE FROM PVC CLASS 200 SDR 21 T PVC C900. JOIN USING WATER-TIGHT CONNECTION

(H) COORDINATE PROPOSED MAIN LINE TO ALIGN WITH THE FINAL FOOTINGS AND EXISTING UTILITIES.

(I) RELOCATE EXISTING CONTROL VALVES TO OUTSIDE OF THE DISCUS THROWING AREA. RECONNECT LATERAL LINES AND CONTROL WIRE. MATCH PIPE SIZES. INSTALL CONTROL VALVES IN NEW VALVE BOXES. BURY NEW CONTROL WIRE SPLICE BOX LOCATED IN THE THROWING SECTOR A MINIMUM 8" DEEP.

(J) CONTRACTOR TO REPAIR IRRIGATION STATIONS PER CONCRETE IMPROVEMENTS

FIG AVENUE

SEE SHEET LS1.4-LS1.5
FOR IRRIGATION NOTES
AND DETAILS

SEE SHEET LS1.5
FOR MWELO CALCULATIONS

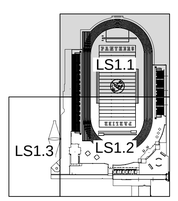

KEYMAP

SCALE: N 1"=20'

0 5 20 40
SCALE IN FEET

811 Know what's below. Call before you dig.

PBK
www.pbk.com
559-448-8400
FRESNO, CA

PARLIER HS STADIUM REPLACEMENT

603 3rd Street
Parlier, CA 93648

CLIENT PROJECT NO: 250093
DSA SUBMISSION
DSA APPL. NO.: 02-124002 DSA FILE NO.: 10-H12

PARLIER UNIFIED SCHOOL DISTRICT

Blair, Church & Flynn
CONSULTING ENGINEERS

LANDSCAPE ARCHITECT
WILLIAM RUSS
12/31/25
Renewal Date
5/14/2026
Date
STATE OF CALIFORNIA

CLIENT	
PARLIER UNIFIED SCHOOL DISTRICT	
DATE	PROJECT NUMBER
2026/02/09	250093

DRAWING HISTORY

No.	Description	Date

CHECKED BY: GP

DRAWN BY: SD

PARTIAL IRRIGATION PLAN

LS1.1

Drawing: P:\224\224-040\Site\ProductionDrawings\224404_IR01.dwg; LS1.1 -
Plot by: gpineda Jun 19, 2026 - 5:03pm

PARTIAL IRRIGATION PLAN
LS1.2

0"
1"

SEE SHEET LS1.1 FOR CONTINUATION

SEE SHEET LS1.3 FOR CONTINUATION

BUILDING N

BUILDING M

STADIUM WAY

AVENUE

FIG

MULTI–PURPOSE BUILDING O

EXISTING BUILDING

A-7	A-8	A-9	A-10
1" 0.21	1" 1.43	1" 1	1" 26.8

A-11	A-12
1" 4.5	1" 2.18

A-13	A-14
1" 0.82	1" 3

IRRIGATION SYSTEM OBSERVATION LOG:				
		REVIEWED & ACCEPTED BY OWNER'S REPRESENTATIVE		
ITEM NO.	WORK ITEM DESCRIPTION	PRINT NAME	SIGNATURE	DATE
IR-1	EXISTING SYSTEM OPERATION & PRESSURE CHECK			
IR-2	PIPING/WIRE SLEEVES UNDER PAVEMENT			
IR-3	MAIN LINE INSTALLATION & PRESSURE TEST			
IR-4	VALVE INSTALLATIONS			
IR-5	IRRIGATION COVERAGE PRIOR TO PLANTING			
IR-6	CONTROL EQUIPMENT INSTALLATION			
IR-7	BOOSTER PUMP INSTALLATION & START-UP (MANUF.)	N/A	N/A	
IR-8	FINAL SYSTEM OPERATION REVIEW			

NOTES: THE ORIGINAL VERSION OF THIS LOG SHALL BE MAINTAINED ON THE AS-BUILT RECORD DRAWING SET.
WORK ITEMS MAY NOT BE REVIEWED IF PRIOR WORK ITEMS HAVE NOT BEEN ACCEPTED.
IT IS THE CONTRACTOR'S RESPONSIBILITY TO ENSURE THAT THE OWNER'S REPRESENTATIVE IS NOTIFIED OF THESE MILESTONE WITNESS POINTS.

BUILDING N

A / LS1.2 ADD ALTERNATIVE DEDUCTION 3
1" = 20' SEE CIVIL SHEET CS3.2

SEE SHEET LS1.4-LS1.5
FOR IRRIGATION NOTES
AND DETAILS

SEE SHEET LS1.5
FOR MWELO CALCULATIONS

KEYMAP

SCALE: 1"=20'
0 5 20 40
SCALE IN FEET

811 Know what's below. Call before you dig.

Drawing: P:\224\224-040\Site\ProductionDrawings\224404_IR01.dwg, LS1.2 - ----
Plot by: gpineda Jun 19, 2026 - 5:03pm

PBK
FRESNO, CA 559-449-8400 www.pbk.com

PARLIER HS STADIUM REPLACEMENT

CLIENT PROJECT NO: 250093
DSA SUBMISSION
603 3rd Street
Parlier, CA 93648
DSA APPL. NO.: 02-124002 DSA FILE NO.: 10-H12

PARLIER UNIFIED SCHOOL DISTRICT

Blair, Church & Flynn
CONSULTING ENGINEERS

DAVID LANDSCAPE ARCHITECTURE
DAVID BUTLER
No. 2124
REGISTERED LANDSCAPE ARCHITECT
5/14/2026
DATE
STATE OF CALIFORNIA

CLIENT	
PARLIER UNIFIED SCHOOL DISTRICT	
DATE	PROJECT NUMBER
2026/02/09	250093

DRAWING HISTORY

No.	Description	Date

CHECKED BY: GP
DRAWN BY: SD

PARTIAL IRRIGATION PLAN

LS1.2

PARTIAL IRRIGATION PLAN
LS1.3

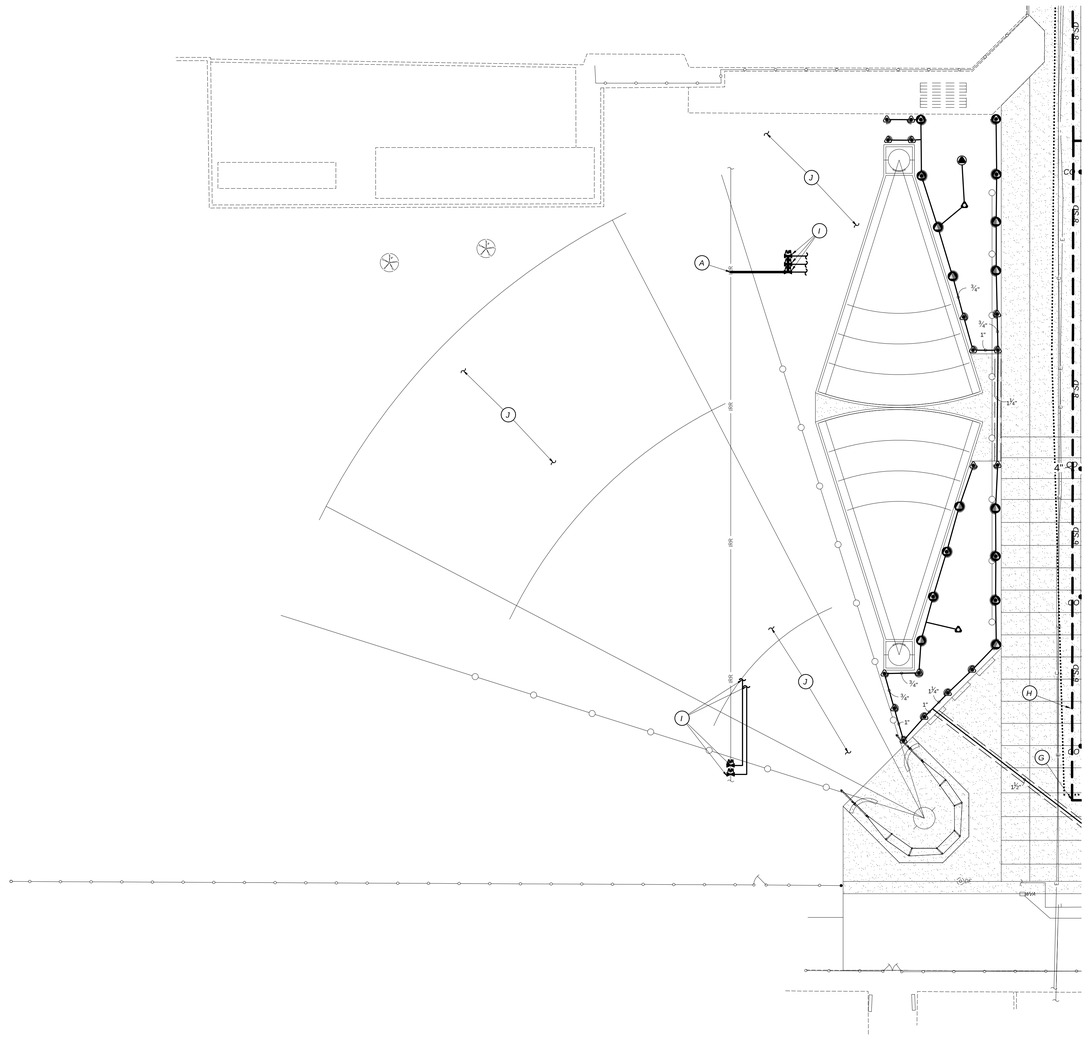

SEE SHEET LS1.4-LS1.5
FOR IRRIGATION NOTES
AND DETAILS

SEE SHEET LS1.5
FOR MWELO CALCULATIONS

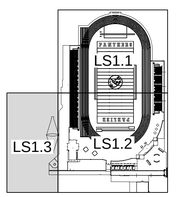

KEYMAP

SCALE: N 1"=20'

0 5 20 40
SCALE IN FEET

811
Know what's below.
Call before you dig.

PBK

FRESNO, CA
559-448-8400
www.pbk.com

PARLIER HS STADIUM REPLACEMENT

603 3rd Street
Parlier, CA 93648

CLIENT PROJECT NO: 250093

DSA SUBMISSION
DSA APPL. NO. : 02-124002 DSA FILE NO. : 10-H12

PARLIER UNIFIED SCHOOL DISTRICT

Blair, Church & Flynn
CONSULTING ENGINEERS

LICENSED LANDSCAPE ARCHITECT
BRILEY MARCUS
13/31/26
Renewal Date
5/14/2026
Date
STATE OF CALIFORNIA

CLIENT	
PARLIER UNIFIED SCHOOL DISTRICT	
DATE 2026/02/09	PROJECT NUMBER 250093
DRAWING HISTORY	

No.	Description	Date

CHECKED BY: GP
DRAWN BY: SD

PARTIAL IRRIGATION PLAN

LS1.3

Drawing: P:\224\224-0404\Site\Production\Drawings\224404_IR01.dwg; LS1.3 - ----
Plot by: gpinedo Jun 19, 2026 - 5:03pm

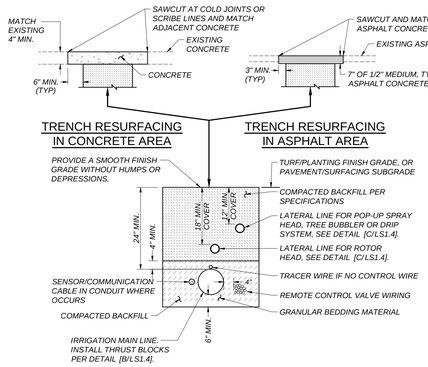

TYPICAL TRENCH SHOWN IN PLANTING AREA

A LS1.4 IRRIGATION TRENCH BACKFILL
NOT TO SCALE

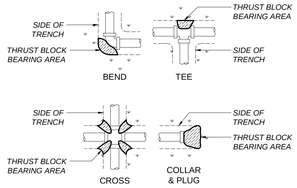

NOTE: CONCRETE PER SPECIFICATIONS. THRUST BLOCKS NOT REQUIRED WITH LESS THAN 2" MAIN LINE

TABLE OF BEARING AREAS REQUIRED (IN SQUARE FEET)					
PIPE DIAMETER	" 4"	6"	8"	10"	12"
CROSS, TEE, 90° BEND, PLUG, FIRE HYDRANT	1	3	5	8	11
45° BEND	1	2	3	4	6
22-1/2° BEND	0.5	1	2	2	3
11-1/4° BEND	0	0	1	1	2
GATE VALVE (IN-LINE)	0	1	2.5	4	9

B LS1.4 CONCRETE THRUST BLOCKS
NOT TO SCALE

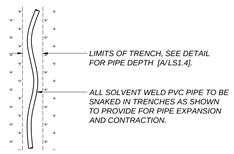

C LS1.4 SOLVENT WELD PIPE
NOT TO SCALE

CONDUIT/SLEEVE FOR CONTROL WIRE

CONDUIT/SLEEVE SIZE	QTY. 14 GA. WIRE
1"	8 OR LESS
1-1/4"	15
1-1/2"	20
2"	32
2-1/2"	45
3"	70
4"	120

NOTE: SLEEVE FOR PIPE IS 2X THE PIPE DIAMETER

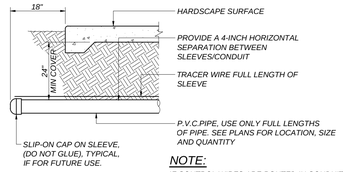

NOTE:
IF CONTROL WIRES ARE ROUTED IN CONDUIT, SLEEVE FOR WIRES IS NOT REQUIRED

D LS1.4 IRRIGATION SLEEVE/CONDUIT
NOT TO SCALE

NOTES:
1. *WIRES UNDER PAVEMENT OR WALKS SHALL BE INSTALLED WITHIN A CONDUIT WHICH HAS BEEN PLACED BY BORING, JACKING OR DRILLING. CONDUIT TO BE PVC SCH 40 TYPE II PIPE. WIRES SHALL NOT BE TAPED TOGETHER INSIDE THE CONDUIT.*
2. *NO SPLICES ARE ALLOWED BETWEEN POINTS OF CONNECTIONS.*
3. *A VALVE BOX MUST BE PROVIDED AT ALL UNDERGROUND SPLICE CONNECTIONS.*
4. *HOT - RED*
   COMMON - WHITE
   SPARE HOT - BLACK
   SPARE COMMON - BLUE
   TRACER WIRE - GREEN

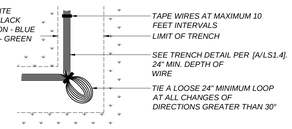

E LS1.4 IRRIGATION WIRE
NOT TO SCALE

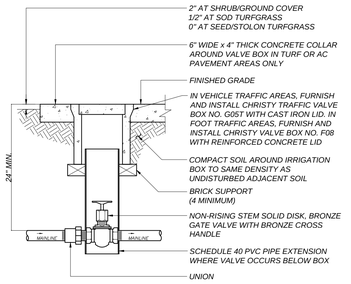

1-1/2" AND SMALLER GATE VALVE

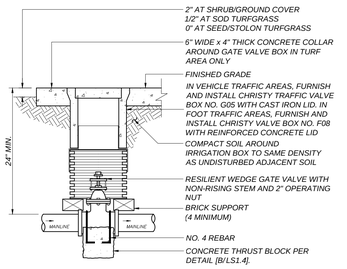

2" AND LARGER GATE VALVE

F LS1.4 GATE VALVE
NOT TO SCALE

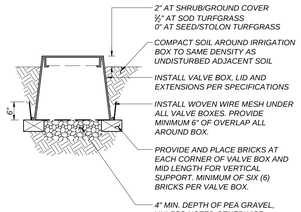

NOTE:
PROVIDE A TRAFFIC RATED CONCRETE BOX AND LID FOR ANY BOX LOCATED IN HARDSCAPE PAVEMENT AND SET FLUSH TO FINISHED SURFACE. PROVIDE A 6"X6" CONCRETE COLLAR AROUND THE BOX IF LOCATED IN ASPHALTIC CONCRETE.

G LS1.4 IRRIGATION VALVE BOX
NOT TO SCALE

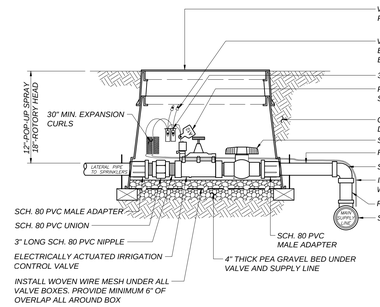

NOTE:
RISER PIPE SIZE AT MINIMUM SHALL MATCH THE LARGEST LATERAL PIPE SIZE

H LS1.4 REMOTE CONTROL VALVE WITH BALL VALVE - GLOBE
NOT TO SCALE

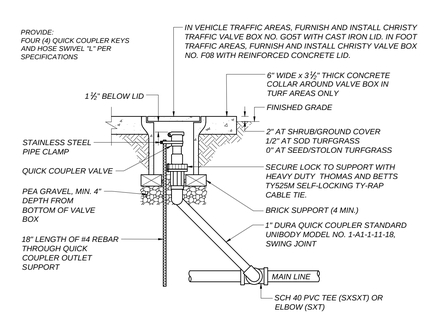

I LS1.4 QUICK COUPLER VALVE
NOT TO SCALE

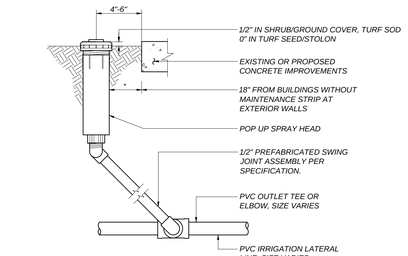

J LS1.4 POP-UP SPRAY
NOT TO SCALE

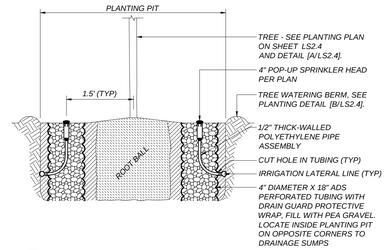

K LS1.4 TREE BUBBLERS
NOT TO SCALE

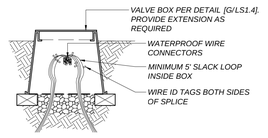

L LS1.4 SPLICEBOX
NOT TO SCALE

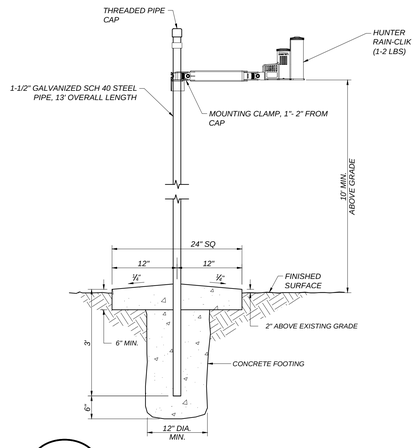

M LS1.4 HUNTER SOLAR SYNC POLE MOUNT
NOT TO SCALE

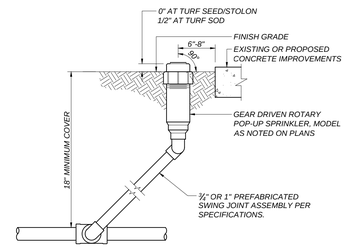

N LS1.4 POP-UP ROTOR
NOT TO SCALE

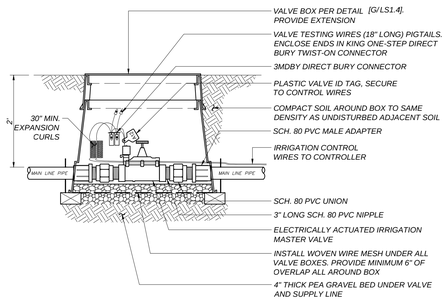

O LS1.4 MASTER VALVE
NOT TO SCALE

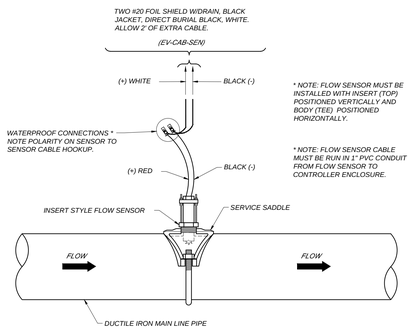

* NOTE: FLOW SENSOR MUST BE INSTALLED WITH INSERT (TOP) POSITIONED VERTICALLY AND BODY (TEE) POSITIONED HORIZONTALLY.

* NOTE: FLOW SENSOR CABLE MUST BE RUN IN 1" PVC CONDUIT FROM FLOW SENSOR TO CONTROLLER ENCLOSURE.

P LS1.4 FLOW SENSOR
NOT TO SCALE

SEE SHEET LS1.5
FOR MWELO CALCULATIONS

Know what's below. Call before you dig.

PBK
www.pbk.com
559-449-8400
FRESNO, CA

PARLIER HS STADIUM REPLACEMENT

CLIENT PROJECT NO: 250093
DSA SUBMISSION
DSA APPL. NO.: 02-124002 DSA FILE NO.: 10-H12

603 3rd Street
Parlier, CA 93648

PARLIER UNIFIED SCHOOL DISTRICT

Blair, Church & Flynn CONSULTING ENGINEERS

LANDSCAPE ARCHITECT BRILEY M. BULLOCK No. 5743 12/31/26 REGISTERED STATE OF CALIFORNIA

CLIENT	
PARLIER UNIFIED SCHOOL DISTRICT	
DATE 2026/02/09	PROJECT NUMBER 250093

DRAWING HISTORY

No.	Description	Date

CHECKED BY: GP
DRAWN BY: SD

IRRIGATION DETAILS

LS1.4

Drawing: P:\224\224-0404\Site\ProductionDrawings\224404_IRD\T01.dwg, Irrigation Details - ----
Plot by: gpinedo Jun 19, 2026 - 5:04pm

IRRIGATION DETAILS
LS1.5

0"
1"

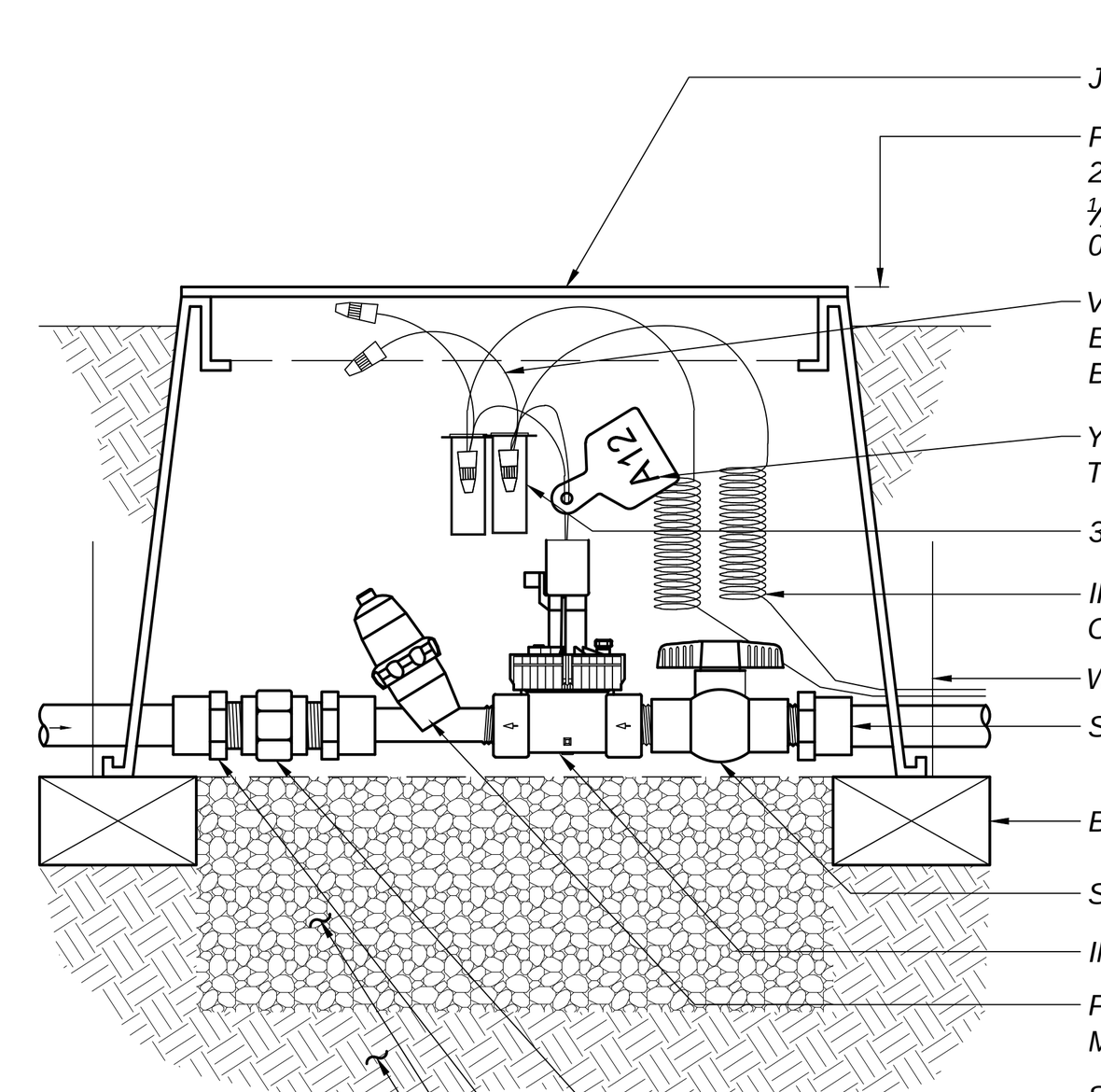

A / LS1.5 DRIP ZONE ASSEMBLY
NOT TO SCALE

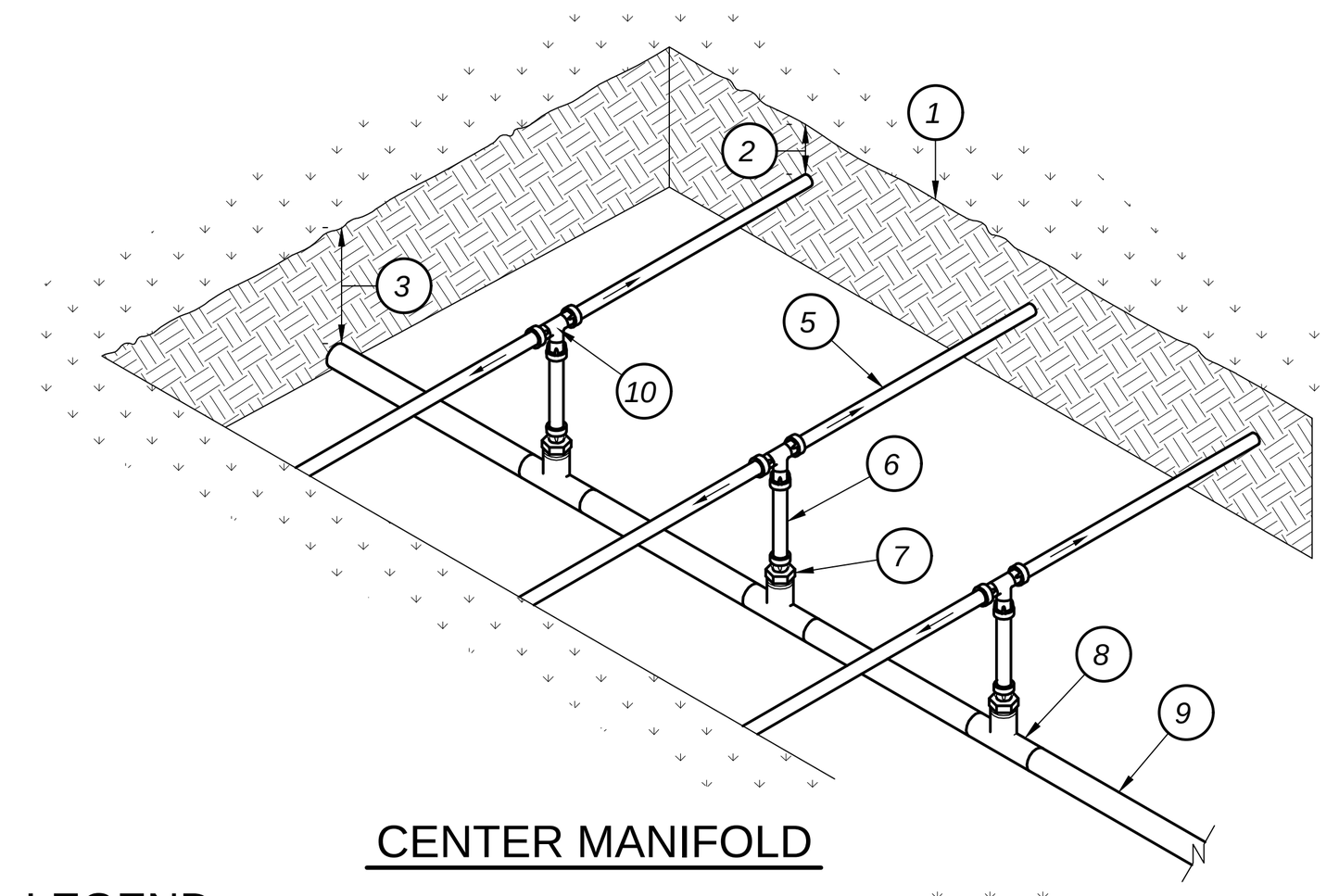

CENTER MANIFOLD

LEGEND:
1. FINISH GRADE
2. DEPTH OF TUBING BELOW FINISHED GRADE - SEE LEGEND
3. MIN. 12" DEPTH OF PVC SUPPLY / FLUSH MANIFOLD BELOW FINISHED GRADE
4. ELBOW
5. DRIPLINE LATERAL, SEE PLAN
6. POLY TUBING, LENGTH AS NECESSARY
7. MALE ADAPTER
8. SCH 40 PVC TEE (SxSxT) WITH 1/2" FPT OUTLET
9. SCH 40 PVC SUPPLY MANIFOLD FROM DRIP ZONE KIT
10. TEE

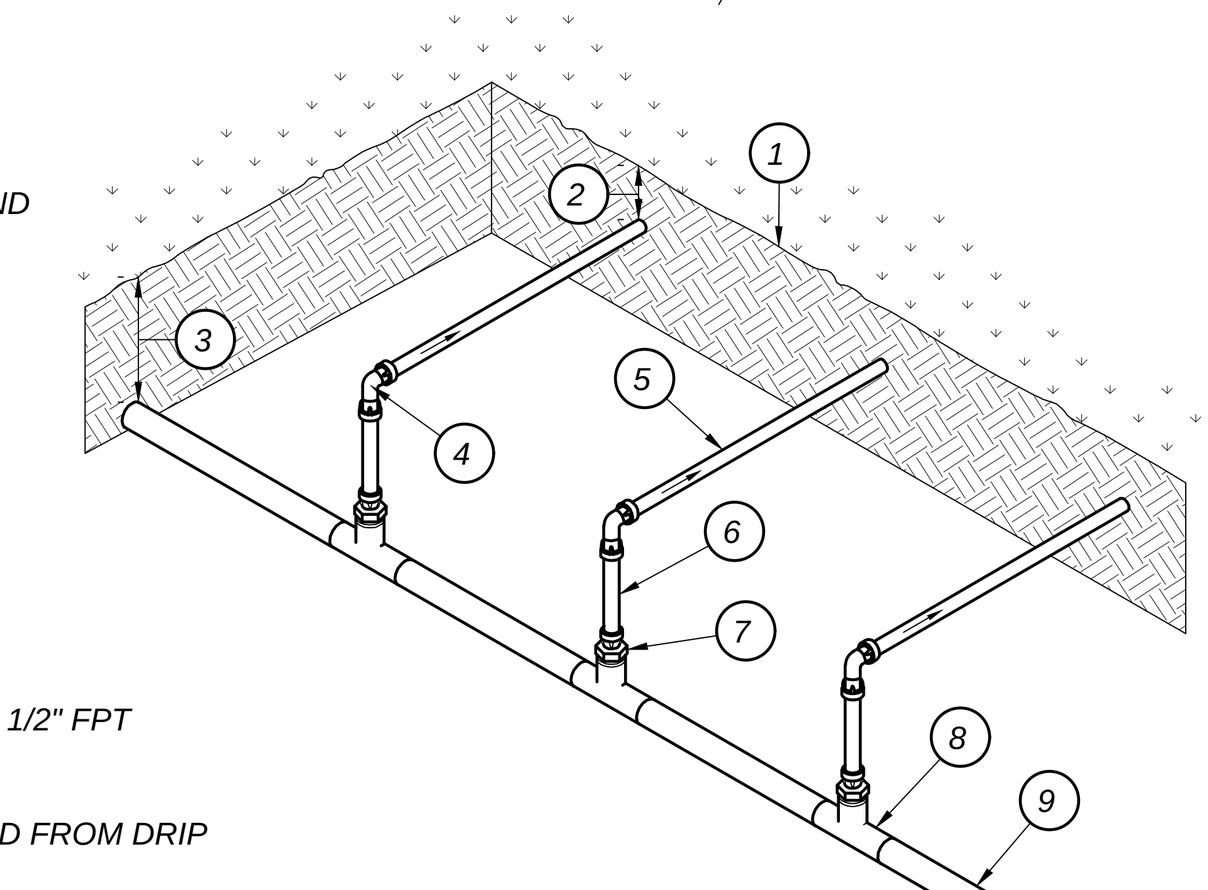

END MANIFOLD

B / LS1.5 DRIPLINE MANIFOLD
NOT TO SCALE

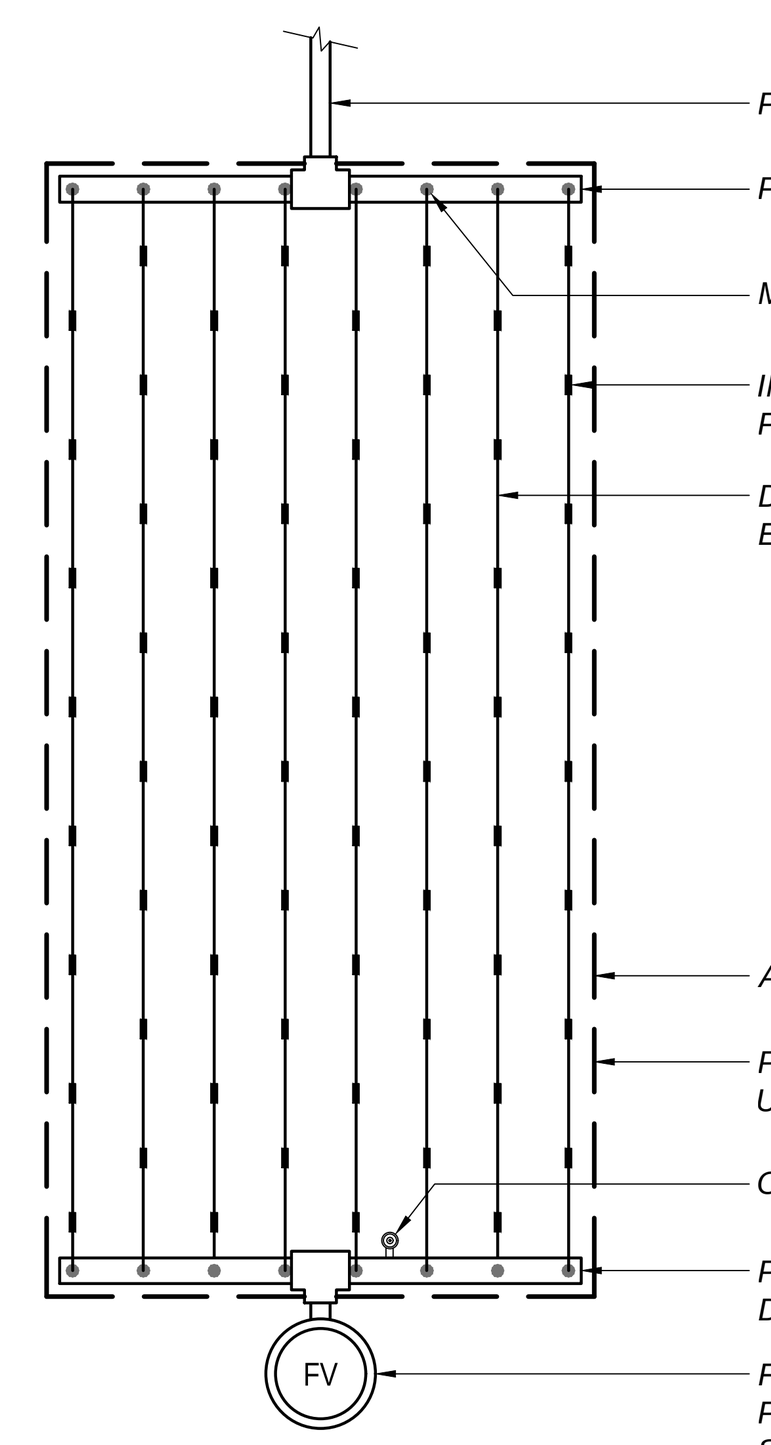

PLAN

C / LS1.5 DRIPLINE LAYOUT SCHEMATIC
NOT TO SCALE

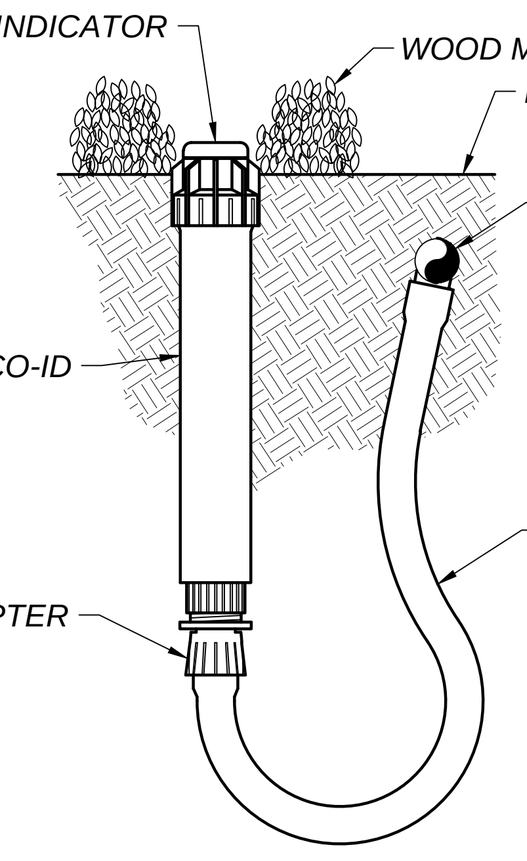

D / LS1.5 HUNTER ECO-INDICATOR
NOT TO SCALE

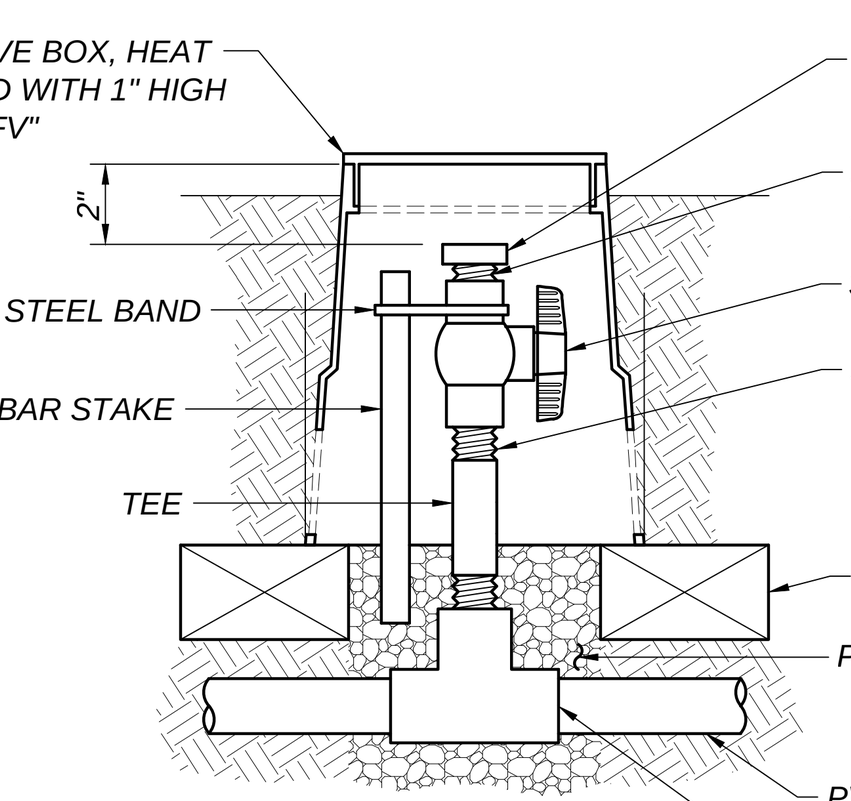

E / LS1.5 DRIPLINE FLUSH VALVE
NOT TO SCALE

DRIP SYSTEM IRRIGATION NOTES:

1. ALL ITEMS, ACCESSORIES, FITTINGS, ETC. NECESSARY FOR A COMPLETE AND PROPERLY FUNCTIONING SUB-SURFACE DRIP SYSTEM ARE TO BE FURNISHED AND INSTALLED BY THE CONTRACTOR, UNLESS NOTED OTHERWISE.
2. THE EQUIPMENT AND COMPONENTS CALLED OUT ON THE DRAWING LEGEND ARE THE PREFERENCE OF THE OWNER AND ARE SELECTED TO MATCH EQUIPMENT AND COMPONENTS IN USE IN OTHER SIMILAR IRRIGATION SYSTEMS OF THE OWNER.
3. PRIOR TO STARTING WORK, THE CONTRACTOR SHALL VERIFY ANY EXISTING SYSTEM COMPONENTS' LOCATION, SIZES AND ROUTING FOR BACKFLOW PREVENTERS, CONTROLLERS, MAIN AND LATERAL PIPING, VALVES, SPRINKLER HEADS AND CONTROL WIRE; AND SHALL CONFIRM THEIR OPERATIONAL STATUS IN THE PRESENCE OF THE OWNER'S REPRESENTATIVE. THE CONTRACTOR SHALL ALSO VERIFY THE AVAILABLE STATIC PRESSURE AND AVAILABLE SAFE FLOW AT THE POINT-OF-CONNECTION. FAILURE TO NOTIFY THE OWNER'S REPRESENTATIVE AND THE ENGINEER BEFORE STARTING WORK, OF ANY DEVIATION FROM THE INFORMATION SHOWN ON THE CONTRACT DOCUMENTS OR NECESSARY REPAIRS TO THE EXISTING SYSTEM, SHALL MAKE THE CONTRACTOR RESPONSIBLE TO PROVIDE, AT HIS OWN EXPENSE, ANY CORRECTIVE WORK OR COMPONENTS NECESSARY FOR A FULLY FUNCTIONAL SYSTEM WITH FULL COVERAGE.
4. THE IRRIGATION PLAN IS DIAGRAMMATIC. ALL PIPING, VALVES, AND COMPONENTS SHALL BE LOCATED IN PLANTING AREAS, UNLESS NOTED OTHERWISE. VALVES SHALL BE LOCATED IN SHRUB/GROUND COVER AREAS INSTEAD OF IN TURFGRASS AREAS WHENEVER POSSIBLE.
5. INSTALL DRIP EMITTERS IN A TRIANGULAR OR STAGGERED PATTERN AND AT A CONSISTENT DEPTH BELOW GRADE AS SHOWN OR INDICATED IN THE DRAWINGS.
6. STAKE THE EMITTER TUBING USING THE MANUFACTURER'S RECOMMENDED STAKES DIRECTLY OVER EVERY OTHER EMITTER. FOR EXAMPLE, IF THE EMITTERS ARE SPACED AT 18 INCHES O.C., THEN STAKE AT 36 INCHES O.C.
7. PRIOR TO BACKFILLING THE DRIP TUBING AND THE START OF PLANTING OPERATIONS, THE SYSTEM SHALL BE REVIEWED FOR PROPER OPERATION BY THE OWNER'S REPRESENTATIVE.
8. PROGRAM THE CONTROLLER TO OPERATE THE CONTROL VALVE(S) FOR THE DRIP SYSTEM USING THE CONTROLLER'S “CYCLE AND SOAK” FEATURE IN ORDER TO APPLY THE REQUIRED WATER AMOUNT IN THREE EQUAL CYCLES.
9. PRIOR TO THE START OF PLANTING OPERATIONS, THE DRIP SYSTEM SHALL BE OPERATED FOR A FREQUENCY AND DURATION TO ADEQUATELY MOISTEN THE TOPSOIL TO A MINIMIM DEPTH OF 12 INCHES AT ANY LOCATION WITHIN THE PLANTING AREA .
10. THE CONTRACTOR SHALL PROVIDE ONE HUNDRED (100) FEET OF IN-LINE EMITTER TUBING OF THE SAME MODEL AS SPECIFIED, ENOUGH STAKES FOR THE 100 FEET, AND TEN (10) OF EACH TYPE OF FITTINGS USED ON THE PROJECT FOR THE OWNER'S USE AS SPARE PARTS.
11. IT IS THE CONTRACTOR'S RESPONSIBILITY TO KEEP ANY EXISTING IRRIGATION SYSTEM SCHEDULED TO REMAIN OPERATIONAL AT ALL TIMES DURING THE COURSE OF THIS WORK. THE CONTRACTOR SHALL REPLACE ANY PLANTS DEAD OR DISTRESSED DUE TO THE INTERRUPTION OF EXISTING IRRIGATION SCHEDULES, AND SHALL PERFORM ALL WORK NECESSARY TO MAINTAIN THE EXISTING SYSTEM'S OPERATION.
12. THE CONTRACTOR SHALL REPLACE ANY EXISTING PLANTS SCHEDULED TO REMAIN THAT ARE DAMAGED BY THIS WORK WITH NEW PLANTS OF THE SAME SPECIES/VARIETY AND SIZE AS THE ORIGINAL PRIOR TO THE START OF WORK. ANY EXISTING TURFGRASS REMOVED FOR THIS WORK SHALL BE REPLANTED IF VIABLE, OR NEW SOD OF THE SAME SPECIES/VARIETY INSTALLED. THE UPPER 6 INCHES OF THE COMPACTED TRENCH BACKFILL SHALL BE CONDITIONED PER THE PLANTING SPECIFICATIONS PRIOR TO SOD INSTALLATION. THE NEW SOD SURFACE SHALL BE FLUSH TO THE ADJACENT TURFGRASS WITHOUT HUMPS OR DEPRESSIONS.

CONTRACTOR SPECIAL IRRIGATION NOTES:

1. THE CONTRACTOR SHALL PERFORM AN OPERATIONAL ASSESSMENT OF THE EXISTING IRRIGATION SYSTEM WITHIN THE AREA OF WORK WITH THE OWNER'S REPRESENTATIVE PRIOR TO THE START OF CONSTRUCTION OPERATIONS.
2. THE CONTRACTOR SHALL ENSURE THAT ALL EXISTING PLANTING SCHEDULED TO REMAIN SHALL CONTINUE TO BE IRRIGATED THROUGHOUT THE COURSE OF CONSTRUCTION OPERATIONS. ANY DAMAGE TO THE EXISTING IRRIGATION SYSTEM THAT IMPACTS EXISTING PLANTING TO REMAIN SHALL BE IMMEDIATELY REPAIRED TO THE OWNER'S SATISFACTION.
3. PRIOR TO THE START OF ANY SHRUB, GROUND COVER, AND/OR TURFGRASS PLANTING, AN OPERATIONAL REVIEW OF THE IRRIGATION SYSTEM SHALL BE PERFORMED FOR PROPER COVERAGE AND SOIL MOISTURE DEPTH BY THE OWNER'S REPRESENTATIVE. ALL CORRECTIONS AND/OR ADJUSTMENTS SHALL BE COMPLETED AND VERIFIED BY THE OWNER'S REPRESENTATIVE BEFORE GROUND LEVEL PLANTING MAY COMMENCE.
4. THE ORIGINAL IRRIGATION SYSTEM OBSERVATION LOG SHALL BE MAINTAINED ON THE AS-BUILT RECORD DRAWING SET.
5. THE AS-BUILT RECORD DRAWING SET AND OTHER CLOSE-OUT ITEMS SHALL BE SUBMITTED AND ACCEPTED PRIOR TO THE SCHEDULING OF A FINAL ACCEPTANCE REVIEW.
6. UNLESS NOTED OTHERWISE, SALVAGE AND RETURN TO THE OWNER ALL IRRIGATION VALVES, HEADS AND OTHER EQUIPMENT COMPONENTS REMOVED AS PART OF THE WORK. SALVAGED COMPONENTS SHALL BE CLEAN AND IN WORKING CONDITION UNLESS NOTED AS NON-OPERATIONAL DURING THE OPERATIONAL ASSESSMENT.

WATER EFFICIENT LANDSCAPE WORKSHEET
Educational - DSA PR 15-03

Project: Parlier Highschool Stadium Replacement
Location: 603 3rd St
ETo Reference (MWELO-Apdx. A): Parlier

MAWA = MAXIMUM APPLIED WATER ALLOWANCE (1,000 GALLONS)

TOTAL NEW BUILDING FOOTPRINT	5,000	SF	(1,600 sf is threshold for inclusion)
75% OF BLDG. SF REQ'D LANDSCAPE	3,750	SF	
EXIST. IRRIGATION REMOVED FROM SERVICE	202,000	SF	
REGULAR LANDSCAPE AREA	1,891	SF	(landscape area >500 sf)
SPECIAL LANDSCAPE AREA (SLA)	0	SF	
TOTAL PROPOSED LANDSCAPE AREA (LA)	1,891	SF	
TOTAL OVER (UNDER) REQUIRED AREA	200,141	SF	

NORMAL YEAR REFERENCE	ANNUAL
EVAPOTRANSPIRATION (ETo)	57.2
EFFECTIVE PRECIPITATION (25% OF ANNUAL)	0.0
ADJUSTED EVAPOTRANSPIRATION	57.2

MAWA=(ETo) x (0.62) [(0.65 x LA)+(0.35 x SLA)]	ANNUAL		2015 DWR/DSA Update
MAX. APPLIED WATER ALLOWANCE	**43.6**	K Gallons	
TOTAL IN ACRE/FT	0.1		
TOTAL IN CCF	58.2		

ETWU = ESTIMATED TOTAL WATER USE (1,000 GALLONS)

LANDSCAPE HYDROZONE TYPES	1,891	HA	PF	IE	ETAF
MIXED PLANTING (L)	1,891	SF	0.3	0.81	0.37
MIXED PLANTING (M)	0	SF	0.5	0.81	0.62
WARM-SEASON TURFGRASS (MH)	0	SF	0.6	0.75	0.80
SLA - RECREATIONAL/RECYCED WATER USE	0	SF	0.6	0.75	0.80
				AVERAGE REGULAR ETAF:	0.37
				MAXIMUM AVERAGE REGULAR ETAF:	**0.65**
				AVERAGE SITEWIDE ETAF:	0.37

ETWU=(ETo) x (0.62)x [(HA x PF/IE) + SLA]	ANNUAL		typical IE coeficients	
MIXED PLANTING (L)	24.8		0.75	overhead sprinklers
MIXED PLANTING (M)	0.0		0.81	drip & bubblers
WARM-SEASON TURFGRASS (M)	0.0			
SLA - RECREATIONAL/RECYCED WATER USE	0.0			
ESTIMATED TOTAL WATER USE	**24.8**	K Gallons		
TOTAL IN ACRE/FT	0.1			
TOTAL IN CCF	33.2			

ETWU AS A PERCENT OF MAWA: 57%

GENERAL IRRIGATION NOTES:

1. ALL ITEMS IN THE LEGEND ARE TO BE FURNISHED AND INSTALLED, UNLESS NOTED OTHERWISE. THE CONTRACTOR SHALL FURNISH THE ARTICLES, EQUIPMENT, MATERIALS OR PROCESSES SPECIFIED BY NAME. NO SUBSTITUTION WILL BE ALLOWED WITHOUT PRIOR WRITTEN APPROVAL OF THE DESIGN ENGINEER. (ALL MATERIAL REQUIRED SHALL BE NEW AND OF THE BEST QUALITY AVAILABLE)
2. THE DESIGN ENGINEER RESERVES THE RIGHT TO REJECT ANY MATERIAL OR WORK WHICH DOES NOT CONFORM TO THE CONTRACT PLANS AND SPECIFICATIONS WITHOUT THE PRIOR WRITTEN APPROVAL OF THE DESIGN ENGINEER.
3. PRIOR TO STARTING WORK, THE CONTRACTOR SHALL VERIFY THE EXISTING SYSTEM COMPONENTS' LOCATION, SIZES AND ROUTING FOR BACKFLOW PREVENTERS, CONTROLLERS, MAIN AND LATERAL PIPING, VALVES, SPRINKLER HEADS AND CONTROL WIRE; AND SHALL CONFIRM THEIR OPERATIONAL STATUS IN THE PRESENCE OF THE OWNER'S REPRESENTATIVE. THE CONTRACTOR SHALL ALSO VERIFY THE AVAILABLE STATIC PRESSURE AT THE POINT-OF-CONNECTION. FAILURE TO NOTIFY THE OWNER'S REPRESENTATIVE BEFORE STARTING WORK OF ANY DEVIATION FROM THE INFORMATION SHOWN ON THE CONTRACT DOCUMENTS, OR NECESSARY REPAIRS TO THE EXISTING SYSTEM, SHALL MAKE THE CONTRACTOR RESPONSIBLE TO PROVIDE, AT HIS OWN EXPENSE, ANY CORRECTIVE WORK OR COMPONENTS NECESSARY FOR A FULLY FUNCTIONAL SYSTEM WITH FULL COVERAGE.
4. THE CONTRACTOR IS RESPONSIBLE TO PROTECT AND KEEP ANY EXISTING IRRIGATION SYSTEM SCHEDULED TO REMAIN OPERATIONAL AT ALL TIMES DURING THE COURSE OF THIS WORK. THE CONTRACTOR SHALL REPLACE ANY PLANTS DEAD OR DISTRESSED DUE TO THE INTERRUPTION OF EXISTING IRRIGATION SCHEDULES AND SHALL PERFORM ALL WORK NECESSARY TO MAINTAIN THE EXISTING SYSTEM'S OPERATIONAL.
5. THE CONTRACTOR IS RESPONSIBLE TO LOCATE AND PROTECT ALL EXISTING UTILITIES. UTILITIES SHOWN ARE FOR THE CONTRACTOR'S AWARENESS AND NO SURVEY HAS BEEN COMPLETE TO VERIFY THE ACCURACY OF THE UTILITIES SHOWN. IT IS THE CONTRACTORS RESPONSIBILITY TO REPAIR ANY DAMAGED UTILITIES CAUSED BY CONSTRUCTION ACTIVITIES.
6. THE CONTRACTOR SHALL BE RESPONSIBLE TO VERIFY ALL DIMENSIONS SHOWN AND TO ADJUST SAID DIMENSIONS TO FIT SITE CONDITIONS AND ACTUAL EQUIPMENT INSTALLED.
7. THE CONTRACTOR SHALL NOT WILLFULLY INSTALL THE IRRIGATION FACILITIES AS INDICATED ON THE DRAWINGS WHEN IT IS OBVIOUS IN THE FIELD THAT UNKNOWN OBSTRUCTIONS MIGHT NOT HAVE BEEN CONSIDERED IN THE DESIGN. SUCH OBSTRUCTIONS OR DIFFERENCES SHALL BE BROUGHT TO THE ATTENTION OF THE DESIGN ENGINEER.
8. THE IRRIGATION PLAN IS DIAGRAMMATIC. ALL PIPING, VALVES, AND HEADS SHALL BE LOCATED IN PLANTING AREAS WHENEVER POSSIBLE.
9. THE CONTRACTOR SHALL PROVIDE ADEQUATE SAFETY MEASURES TO WARN AND PROTECT THE PUBLIC, OTHER SITE CONTRACTORS AND HIS WORKERS FROM POSSIBLE INJURY DUE TO HIS CONSTRUCTION EQUIPMENT AND OPERATIONS.
10. DUE TO THE SCALE OF THE DRAWINGS, IT IS NOT POSSIBLE TO INDICATE ALL OFFSETS, FITTINGS, ETC. WHICH MAY BE REQUIRED. THE CONTRACTOR SHALL CAREFULLY INVESTIGATE THE STRUCTURAL AND FINISHED CONDITIONS AFFECTING ALL HIS WORK, AND PLAN HIS WORK ACCORDINGLY, FURNISHING SUCH FITTINGS, ETC., AS MAY BE REQUIRED TO INSTALL THE PROPOSED FACILITIES AND ACCOMMODATE THE SITE CONDITIONS. DRAWINGS ARE GENERALLY DIAGRAMMATIC AND INDICATIVE OF THE WORK TO BE DONE TO PROVIDE A COMPLETE AND OPERATIONAL IRRIGATION SYSTEM. ALL WORK TO BE DONE IN ACCORDANCE WITH MANUFACTURER'S RECOMMENDATIONS, LOCAL CODES AND ORDINANCES.
11. VALVES SHALL BE LOCATED IN SHRUB/GROUND COVER AREAS INSTEAD OF IN TURFGRASS AREAS WHENEVER POSSIBLE. VALVES IN ATHLETIC SPORTS FIELDS SHALL BE LOCATED OUTSIDE OF THE FIELD-OF-PLAY TO THE GREATEST EXTENT POSSIBLE.
12. THE CONTRACTOR SHALL REPLACE ANY EXISTING PLANTS SCHEDULED TO REMAIN (SEE LANDSCAPE PLANS) THAT ARE DAMAGED BY THIS WORK WITH NEW PLANTS OF THE SAME SPECIES/VARIETY AND SIZE AS THE ORIGINAL.
13. ANY EXISTING TURFGRASS REMOVED FOR THIS WORK SHALL BE REPLANTED IF VIABLE, OR NEW SOD OF THE SAME SPECIES/VARIETY INSTALLED. THE UPPER 6 INCHES OF THE COMPACTED TRENCH BACKFILL SHALL BE CONDITIONED PER LANDSCAPE SPECIFICATIONS PRIOR TO SOD INSTALLATION. THE NEW SOD SURFACE SHALL BE FLUSH TO THE ADJACENT TURFGRASS WITHOUT HUMPS OR DEPRESSIONS.
14. INSTALL SLEEVES UNDER ALL ASPHALT/CONCRETE IMPROVEMENTS. SLEEVES SHALL BE PVC SCH. 40 PVC OR SDR 35 AND TWICE THE DIAMETER OF THE PIPE UNLESS OTHERWISE NOTED. CONTROL WIRING SHALL BE SLEEVED IN 2" SCH 40 PVC UNLESS OTHERWISE NOTED. MINIMUM DEPTH OF SLEEVES UNDER ALL ASPHALT/CONCRETE IMPROVEMENTS IS 18" BELOW SUBGRADE OR 24" BELOW FINISHED GRADE, WHICHEVER IS GREATER.
15. CONTRACTOR SHALL SAWCUT TO EXISTING JOINTS. REMOVE AND REPLACE SURFACING (CONCRETE, ASPHALT) AS NECESSARY TO INSTALL THE IRRIGATION SYSTEM.
16. THE CONTRACTOR SHALL PROVIDE AND KEEP AN UP-TO-DATE "RECORD DRAWING" SHOWING ALL CHANGES TO THE ORIGINAL DRAWINGS AND EXACT LOCATIONS OF THE FACILITIES INSTALLED. BEFORE FINAL INSPECTION, THE CONTRACTOR SHALL FURNISH MARKED "RECORD DRAWINGS" TO THE INSPECTOR.
17. THE CONTRACTOR SHALL PROVIDE ADJUSTMENT OF NOZZLE ARC AND RADIUS, INCLUDING ANY ALTERNATE NOZZLE TYPES, NECESSARY TO PROVIDE COMPLETE COVERAGE, TO SUIT ACTUAL SITE CONDITIONS, AND TO MINIMIZE OVERSPRAY ONTO HARDSCAPE, PAVEMENT AND/OR STRUCTURES.
18. CONCRETE ANCHORS OR THRUST BLOCKS SHALL BE PROVIDED ON ALL MAIN LINE PIPING. THEY ARE TO BE LOCATED AT ALL ABRUPT CHANGES IN PIPELINE GRADE, CHANGES IN HORIZONTAL ALIGNMENT, REDUCTION IN PIPE SIZES, END OF LINE AND IN-LINE VALVES TO ABSORB ANY AXIAL THRUST OF THE PIPE. THE PIPE MANUFACTURER'S RECOMMENDATIONS FOR THRUST CONTROL SHALL BE FOLLOWED. THRUST BLOCKS MUST BE FORMED AGAINST UNDISTURBED EARTH.
19. ALL MAIN LINE AND LATERAL LINE PIPES UNDER PAVEMENT SHALL BE PRESSURE TESTED WITH THE VALVES INSTALLED. THE CONTRACTOR SHALL PROVIDE ALL EQUIPMENT NEEDED. IF ANY LEAKS DEVELOP, THE REPAIRS ARE TO BE MADE AND THE TEST REPEATED UNTIL THE SYSTEM IS PROVEN WATERTIGHT. THE CONTRACTOR IS TO CENTER LOAD THE PIPE AND LEAVE ALL JOINTS EXPOSED FOR INSPECTION. THE PRESSURE TEST SHALL BE OBSERVED AND APPROVED BY THE OWNER'S REPRESENTATIVE. WHEN THE PIPE IS PROVEN WATERTIGHT AND ONLY THEN MAY THE LINE BE BACKFILLED.
20. WIRED CONNECTIONS BETWEEN THE CONTROLLER AND REMOTE CONTROL VALVES SHALL BE MADE WITH ONE CONTINUOUS DIRECT BURIAL WIRE RUN. A VALVE BOX MUST BE PROVIDED AT THE CONTRACTOR'S EXPENSE AT ALL UNDERGROUND SPLICES.
21. ONLY TEFLON TAPE OR AN APPROVED TEFLON PASTE MAY BE USED AS THE SEALING MATERIAL TO MAKE ALL THREADED CONNECTIONS. A MINIMUM OF TWO (2) WRAPS IN THE DIRECTION OF THE THREADS TO BE USED FOR TAPE. NO OTHER PIPE JOINT MATERIAL WILL BE ALLOWED WITHOUT THE WRITTEN AUTHORIZATION FROM THE DESIGN ENGINEER.
22. THE CONTRACTOR SHALL PROVIDE TWO (2) INDIVIDUALLY BOUND SETS OF OPERATION AND MAINTENANCE MANUALS. THE MANUAL SHALL CONTAIN THE FOLLOWING INFORMATION:
    A. CONTRACTOR'S ADDRESS AND PHONE NUMBER.
    B. DURATION OF GUARANTEE PERIOD (ONE YEAR AFTER FINAL ACCEPTANCE).
    C. NAMES, ADDRESSES AND PHONE NUMBERS OF LOCAL MANUFACTURER REPRESENTATIVES.
    D. COMPLETE SET OF MANUFACTURER'S LITERATURE AND SPECIFICATIONS.
    E. COMPLETE OPERATING AND MAINTENANCE INSTRUCTIONS ON ALL MAJOR EQUIPMENT.
    F. ISSUE A "CERTIFICATE OF CONSTRUCTION COMPLIANCE" WHICH STATES THAT ALL WORK DONE AND MATERIALS AND EQUIPMENT USED ARE IN CONFORMANCE WITH THE APPROVED PLANS, SPECIFICATIONS AND ALL AUTHORIZED REVISIONS.
    G. INITIAL ELECTRICAL DATA ON EACH VALVE:
       (1) OHMMS READING FOR EACH VALVE TAKEN AT THE CONTROLLER.
       (2) VOLTAGE READING FOR EACH VALVE TAKEN BOTH AT THE CONTROLLER AND AT THE VALVE.
23. THE CONTRACTOR SHALL PROVIDE TWO SETS OF CONTROLLER CHARTS. THE CHARTS TO BE A REDUCED DRAWING OF THE ACTUAL PLANS. THE CHARTS SHALL BE COLORED WITH A DIFFERENT COLOR FOR EACH IRRIGATION CIRCUIT. THE CHARTS SHALL BE COVERED IN A WATERTIGHT ENVELOPE.
24. IRRIGATION LINE TRENCHING AND PIPE INSTALLATION LOCATED WITHIN THE CANOPY DRIP LINE OF EXISTING TREES SHALL BE PERFORMED BY HAND OR BY AIR SPADE WITHOUT CUTTING OR DAMAGING EXISTING ROOTS GREATER THAN ONE INCH IN DIAMETER. SEE EXISTING LANDSCAPE PROTECTION SECTION FOR ADDITIONAL REQUIREMENTS.
25. REPLACE ALL DAMAGED EXISTING VALVE BOXES AND/OR LIDS WITHIN THE AREA OF WORK. ADJUST THE ELEVATION OF ALL EXISTING VALVE BOXES WITHIN THE AREA OF WORK TO FINISH GRADE AS NECESSARY TO COMPLY WITH THE VALVE BOX DETAIL.

Know what's **below.**
Call before you dig.

PBK
FRESNO, CA | 559-448-8400 | www.pbk.com

PARLIER HS STADIUM REPLACEMENT
603 3rd Street
Parlier, CA 93648

CLIENT PROJECT NO: 250093
DSA SUBMISSION
DSA APPL. NO. : 02-124002 DSA FILE NO. : 10-H12

PARLIER UNIFIED SCHOOL DISTRICT

Blair, Church & Flynn
CONSULTING ENGINEERS

LICENSED LANDSCAPE ARCHITECT
W. BRILEY NO.
Signature
12/31/26
Renewal Date
5/14/2026
Date
STATE OF CALIFORNIA

CLIENT	
PARLIER UNIFIED SCHOOL DISTRICT	
DATE 2026/02/09	PROJECT NUMBER 250093

DRAWING HISTORY

No.	Description	Date

CHECKED BY: GP
DRAWN BY: SD

IRRIGATION DETAILS

LS1.5

0"
1"

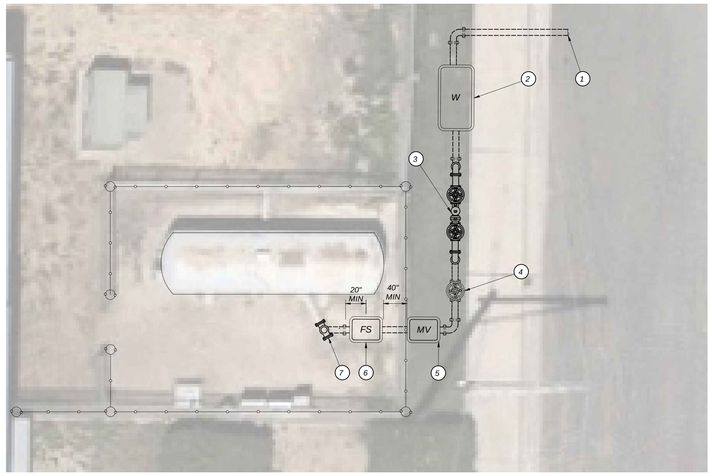

LEGEND:

UP/DN	PIPE RISER UP/DOWN
1	NEW IRRIGATION SERVICE, SEE STD CITY DETAIL W-1 & W-8
2	WATER METER, SEE STD CITY DETAIL W-1
3	BACKFLOW PREVENTER, SEE TYPICAL LAYOUT BELOW AND STD CITY DETAIL W-16
4	GATE VALVE PER [F/LS1.4]
5	NEW MASTER VALVE PER [Q/LS1.4]
6	NEW FLOW SENSOR PER [P/LS1.4]
7	TEE CONNECTION TO EXISTING LINE
	BELOW-GRADE DUCTILE IRON PIPE

A / LS1.6 IRRIGATION YARD - IRRIGATION PLAN ENLARGEMENT

1" = 5'-0"

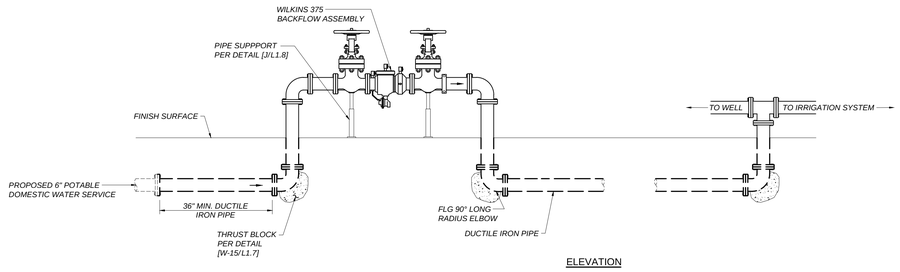

ELEVATION

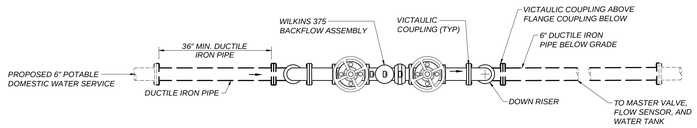

PLAN

NOTES:

1. ALL BELOW GRADE DUCTILE IRON PIPE CARRYING RECYCLED WATER SHALL BE COVERED IN PURPLE WRAP.
2. ALL ABOVE GRADE DUCTILE IRON PIPE AND COMPONENTS CARRYING RECYCLED WATER SHALL BE PAINTED PURPLE.

B / LS1.6 TYPICAL BACKFLOW AND NEW IRRIGATION SERVICE CONNECTION

NOT TO SCALE

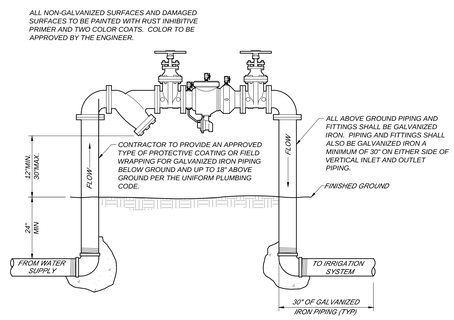

C / LS1.6 ZURN WILKINS 375 BACKFLOW PREVENTER

NOT TO SCALE

Know what's below. Call before you dig.

PBK
FRESNO, CA
559-448-8400
www.pbk.com

PARLIER HS STADIUM REPLACEMENT

603 3rd Street
Parlier, CA 93648

CLIENT PROJECT NO: 250093

DSA SUBMISSION

DSA APPL. NO. : 02-124002 DSA FILE NO. : 10-H12

PARLIER UNIFIED SCHOOL DISTRICT

Blair, Church & Flynn CONSULTING ENGINEERS

LANDSCAPE ARCHITECT — BRADLEY W. BURT — No. 5625 — REGISTERED — 12/31/26 RENEWAL DATE — STATE OF CALIFORNIA

CLIENT
PARLIER UNIFIED SCHOOL DISTRICT

DATE	PROJECT NUMBER
2026/02/09	250093

DRAWING HISTORY

No.	Description	Date

CHECKED BY: GP

DRAWN BY: SD

IRRIGATION DETAIL

LS1.6

Drawing: P:\224\224-040#\Site\ProductionDrawings\224404_IRD701.dwg; Irrigation Detail (2) - ----
Plot by: gpinedo Jun 19, 2026 - 5:04pm

PARTIAL PLANTING PLAN
LS2.1

0"
1"

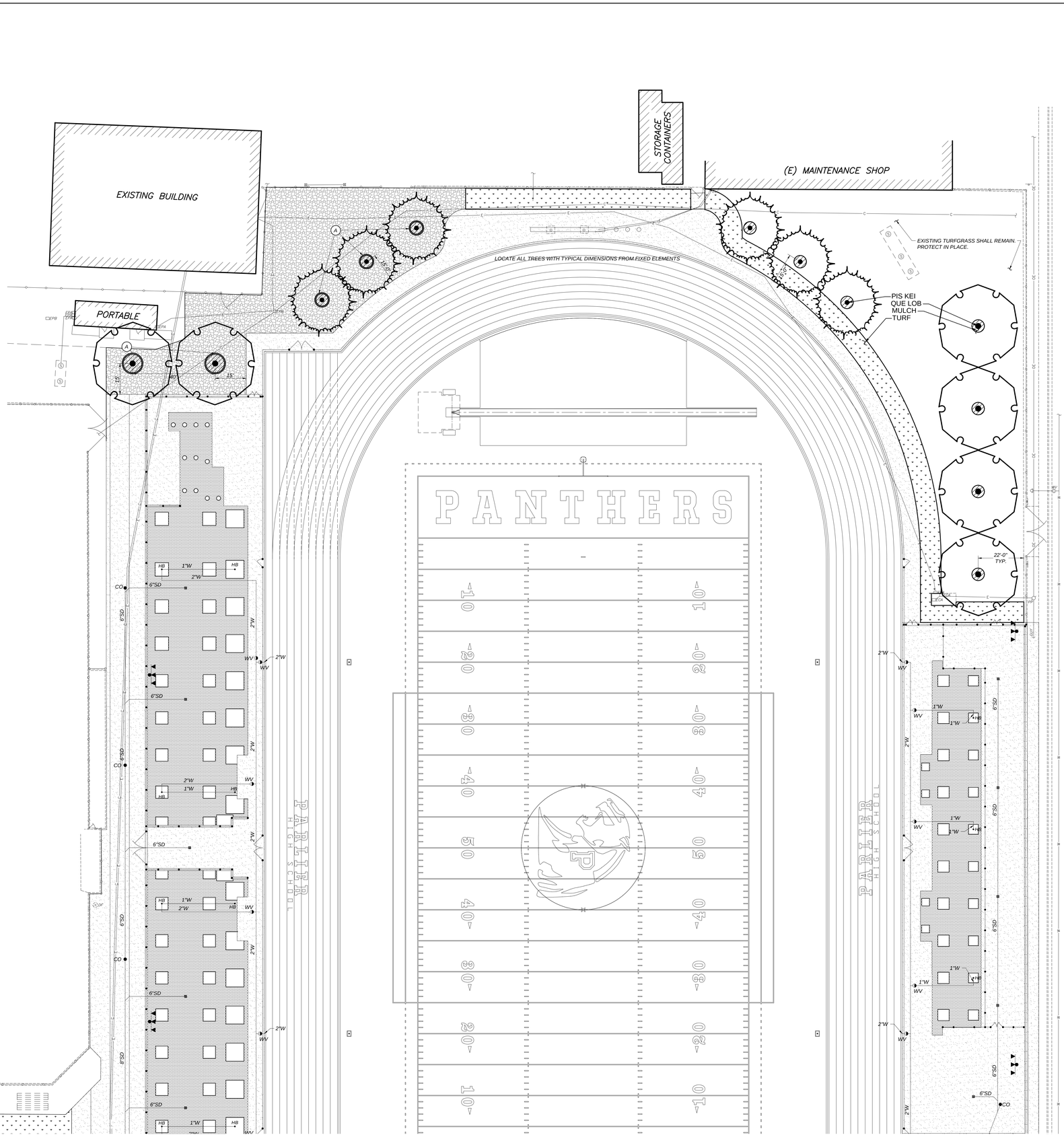

SEE SHEET LS2.2 FOR CONTINUATION

LANDSCAPE SHADE CALCULATIONS	SHADING PER CALGREEN 5.106.12			v6
SITE SHADING - LANDSCAPE & HARDSCAPE	**QUANTITY PROPOSED (SF)**	**PERCENT SHADE REQUIRED**	**LANDSCAPE SHADE REQUIRED**	**HARDSCAPE SHADE AREA REQUIRED**
LANDSCAPED AREA (EXCLUDING ORGANIZED SPORT ACTIVITY & PARKING LANDSCAPE AREAS)	1,363	20	273	
HARDSCAPE AREA (EXCLUDING PARKING HARDSCAPE AREAS)	96,777	20		19,355
SHADE CREDIT FROM SOLAR OR OTHER SHADE STRUCTURES			0	1,972
SHADE CREDIT FROM EXISTING TREES			0	0
TOTAL SHADE FROM NEW TREES REQUIRED			**273**	**17,383**
PROVIDED SHADE TREES FOR SITE SHADING	**NO. TREES IN LANDSCAPE**	**NO. TREES IN HARDSCAPE**	**LANDSCAPE SHADE AREA**	**HARDSCAPE SHADE AREA**
VERY LARGE (40' dia = 1256 SF)	0	10	0	12,560
LARGE (35' dia = 962 SF)	6	5	5,772	4,810
MEDIUM (30' dia.= 707 SF)	0	0	0	0
SMALL (20' dia = 314 SF)	0	4	0	1,256
TOTALS	6	19	**5,772**	**18,626**
PARKING LOT SHADING	**QUANTITY PROPOSED (SF)**	**PERCENT REQUIRED**		**SHADE AREA REQUIRED (SF)**
PARKING LOT STALLS, LOADING ZONES, AISLES	4,413	50		2,207
PARKING LOT LANDSCAPE	528	20		106
PARKING LOT HARDSCAPE	2,953	20		591
TOTAL PARKING SHADE REQUIRED				2,903
SHADE CREDIT FROM SOLAR OR OTHER SHADE STRUCTURES				0
SHADE CREDIT FROM EXISTING TREES				0
TOTAL SHADE FROM NEW TREES REQUIRED AT PARKING				**2903**
PROVIDED SHADE TREES - PARKING AREA			**NO. TREES IN PARKING AREA**	**PROVIDED PARKING SHADE AREA**
VERY LARGE (40' dia = 1256 SF)			0	0
LARGE (35' dia = 962 SF)			4	3,848
MEDIUM (30' dia = 707 SF)			0	0
SMALL (20' dia = 314 SF)			0	0
TOTALS			4	**3,848**
Percentage of Parking Area Shade Requirement:	**133%**	Note: 100% or more is compliant		
Percentage of Site Hardscape Area Shade Requirement:	**2117%**			
Percentage of Site Landscape Area Shade Requirement:	**107%**			

WATER CONSERVATION COMPLIANCE STATEMENT:

I HAVE COMPLIED WITH THE PERFORMANCE COMPLIANCE OPTION CRITERIA OF THE MODEL WATER EFFICIENT LANDSCAPE ORDINANCE (MWELO) AND APPLIED THEM FOR THE EFFICIENT USE OF WATER IN THE LANDSCAPE DESIGN PLAN.

DAVID W. BRILEY, CA 2787

LANDSCAPE PLANTING BID ALLOWANCE:

CONTRACTOR SHALL INCLUDE A BID ALLOWANCE IN THE AMOUNT OF $3,000 FOR THE REMOVAL AND REPLACEMENT OF EXISTING PLANTS/TURFGRASS AND/OR THE INSTALLATION OF NEW PLANTS/TURFGRASS WHERE NOT SPECIFICALLY SHOWN ON THE DRAWINGS FOR REPLACEMENT OR INSTALLATION.

FIG AVENUE

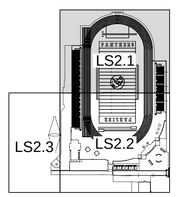

KEYMAP

SCALE: N 1"=20'

0 5 20 40
SCALE IN FEET

Know what's below. Call before you dig.

PBK

www.pbk.com
559-449-8400
FRESNO, CA

PARLIER HS STADIUM REPLACEMENT

603 3rd Street
Parlier, CA 93648

CLIENT PROJECT NO: 250093
DSA SUBMISSION
DSA APPL. NO.: 02-124002 DSA FILE NO.: 10-H12

PARLIER UNIFIED SCHOOL DISTRICT

Blair, Church & Flynn
CONSULTING ENGINEERS

DAVID W. BRILEY
LICENSED LANDSCAPE ARCHITECT
No. 2787
12/31/25
Renewal Date
5/14/2026
Date
STATE OF CALIFORNIA

CLIENT	
PARLIER UNIFIED SCHOOL DISTRICT	
DATE	PROJECT NUMBER
2026/02/09	250093

DRAWING HISTORY

No.	Description	Date

CHECKED BY: GP

DRAWN BY: SD

PARTIAL PLANTING PLAN

LS2.1

Drawing: P:\224\224-040\4\Site\Production\Drawings\224404_LA01.dwg, Partial Planting Plan ----- Plot by: gpinedo Jun 19, 2026 - 5:04pm

PARTIAL PLANTING PLAN
LS2.2

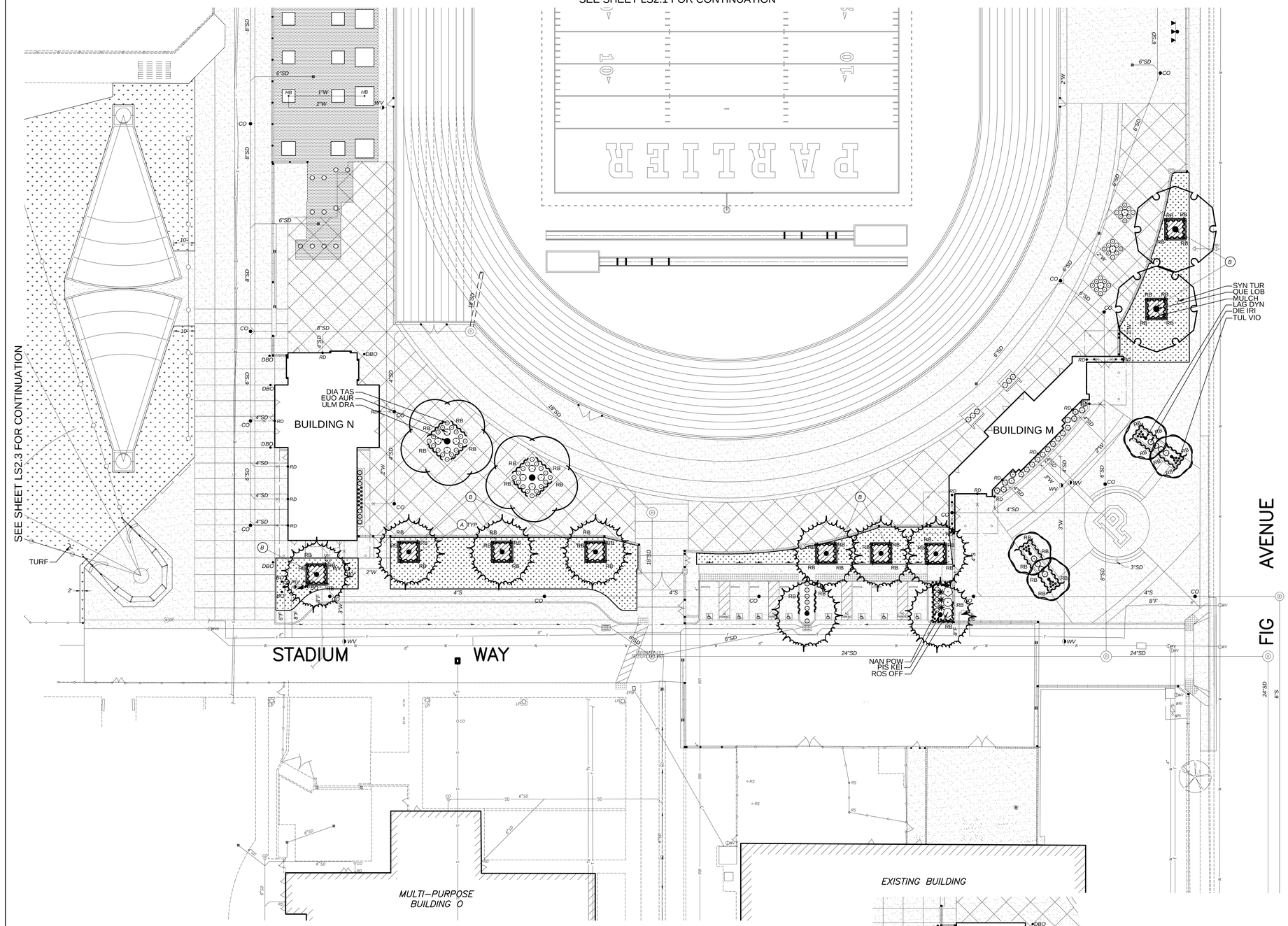

TREE SIZE AND QUALITY STANDARDS

AMERICAN STANDARDS FOR NURSERY STOCK (ANSI Z60.1) AND GUIDELINE SPECIFICATIONS FOR NURSERY TREE QUALITY (URBAN TREE FOUNDATION SHALL APPLY

	TYPES 1 & 2 SHADE TREES			TYPE 3 SMALL UPRIGHT TREES **			TYPE 4 SMALL SPREADING TREES ***		
CONTAINER SIZE	MIN. CALIPER	MAX. CALIPER	TYPE 1 MIN./MAX. HEIGHT *	MIN. CALIPER	MAX. CALIPER	MIN./MAX. HEIGHT	MIN. CALIPER	MAX. CALIPER	MIN./MAX. HEIGHT
15 GALLON	0.75	2.0	7-10 FT	0.75	2.0	6-8 FT	0.75	2.0	4-8 FT
24" BOX	1.25	3.0	8-12 FT	1.25	3.0	8-10 FT	1.25	3.0	6-10 FT
36" BOX	1.75	3.5	10-16 FT	1.75	3.5	10-14 FT	1.75	3.5	7-12 FT
42" BOX	2.0	4.0	12-20 FT	2.0	4.0	12-18 FT	2.0	4.0	8-14 FT
48" BOX	2.5	5.0	14-26 FT	2.5	5.0	14-22 FT	2.5	5.0	9-16 FT

* TYPE 2 TREE HEIGHTS SHALL NOT BE LESS THAN TWO-THIRDS THE LISTED HEIGHT RANGE.

** TYPE 3 TREES SHALL HAVE A MINIMUM OF SEVEN BRANCHES.

*** TYPE 4 TREES SHALL HAVE A MINIMUM OF EIGHT BRANCHES.

CALIPER MEASUREMENT FOR CLUMP OR MULTI-STEM TREES IS ONE-HALF THE SUM OF THE THREE LARGEST TRUNK CALIPERS.

CALIPER MEASUREMENT FOR <4" TRUNK IS +6" ABOVE ROOTBALL (NOT INCLUDING ROOTSTOCK). >4" TRUNK IS +12".

TREES SHALL HAVE A CENTRAL LEADER. NEW LEADERS LESS THAN HALF THE DIAMETER OF A HEADED LEADER, BROKEN OR CO-DOMINATE LEADERS ARE NOT ACCEPTABLE.

SCAFFOLD BRANCHES SHALL BE LESS THAN 2/3 THE DIAMETER OF THE TRUNK, WITHOUT INCLUDED BARK AT ATTACHMENT. SCAFFOLD BRANCHES SHALL BE BALANCED, WELL SPACED VERTICALLY, AND WITH A RADIALLY BLANK SECTOR NO GREATER THAN 1/3 OF THE CANOPY CIRCUMFERENCE.

TEMPORARY BRANCHES ON THE LOWER TRUNK SHALL BE LESS THAN 3/8 INCH DIAMETER; AND THE CLEAR TRUNK HEIGHT SHALL BE NO MORE THAN 40% OF THE TOTAL TREE HEIGHT.

THE ROOT COLLAR AND ROOTBALL SHALL BE FREE OF DEFECTS INCLUDING CIRCLING, KINKED AND GIRDLING ROOTS. ROOTS THE EDGE AND BOTTOM OF THE CONTAINER SHALL BE LESS THAN 1/4 INCH DIAMETER, AND UNIFORM THROUGHOUT THE CONTAINER.

TREE CANOPY WIDTH SHALL BE A MINIMUM OF 25% OF THE STANDARD FORM TREE HEIGHT.

DO NOT HEAD BACK OR PRUNE TREES UNLESS APPROVED AND/OR DIRECTED TO BY THE LANDSCAPE ARCHITECT.

LANDSCAPE PLANTING OBSERVATION LOG:

ITEM NO.	WORK ITEM DESCRIPTION	REVIEWED & ACCEPTED BY OWNER'S REPRESENTATIVE		
		PRINT NAME	SIGNATURE	DATE
PL-1	REPORT & PROTECTION OF EXISTING TREES			
PL-2	RIPPING OF PLANTING AREAS			
PL-3	SOIL CONDITIONING & TILLAGE DEPTH			
PL-4	IRRIGATION COVERAGE PRIOR TO PLANTING			
PL-5	FINISH GRADING PRIOR TO PLANTING			
PL-6	TREES - INITIAL QUALITY & LAYOUT			
PL-7	PLANTS - INITIAL QUALITY & LAYOUT			
PL-8	GRANULAR PRE-EMERGENT HERBICIDE IN MULCHED AREAS			
PL-9	WOOD MULCH DEPTH			

NOTES:
THE ORIGINAL VERSION OF THIS LOG SHALL BE MAINTAINED ON THE AS-BUILT RECORD DRAWING SET.
WORK ITEMS MAY NOT BE REVIEWED IF PRIOR WORK ITEMS HAVE NOT BEEN ACCEPTED.
IT IS THE CONTRACTOR'S RESPONSIBILITY TO ENSURE THAT THE OWNER'S REPRESENTATIVE IS NOTIFIED OF THESE MILESTONE WITNESS POINTS.

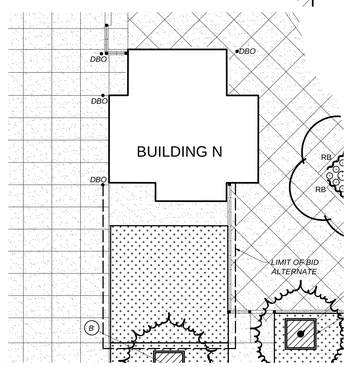

A / LS2.2 BID ALTERNATIVE 3
1" = 20'
SEE CIVIL SHEET CS3.2

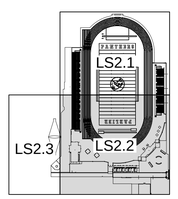

KEYMAP

SCALE: N 1"=20'
0 5 20 40
SCALE IN FEET

Know what's below. Call before you dig.

PBK
FRESNO, CA
559-449-8400
www.pbk.com

PARLIER HS STADIUM REPLACEMENT

CLIENT PROJECT NO: 250093
DSA SUBMISSION
DSA APPL. NO.: 02-124002 DSA FILE NO.: 10-H12

603 3rd Street
Parlier, CA 93648

PARLIER UNIFIED SCHOOL DISTRICT

Blair, Church & Flynn
CONSULTING ENGINEERS

DAVID L. BUTLER
LANDSCAPE ARCHITECT
12/31/26
Renewal Date
5/14/2026
Date
STATE OF CALIFORNIA

CLIENT
PARLIER UNIFIED SCHOOL DISTRICT
DATE 2026/02/09
PROJECT NUMBER 250093

DRAWING HISTORY

No.	Description	Date

CHECKED BY: GP
DRAWN BY: SD

PARTIAL PLANTING PLAN

LS2.2

Drawing: P:\224\224-045\Site\Production\Drawings\224404_LA01.dwg, LS2.2 - ----
Plot by: gpineda Jun 19, 2026 - 3:04pm

PARTIAL PLANTING PLAN
LS2.3

0"
1"

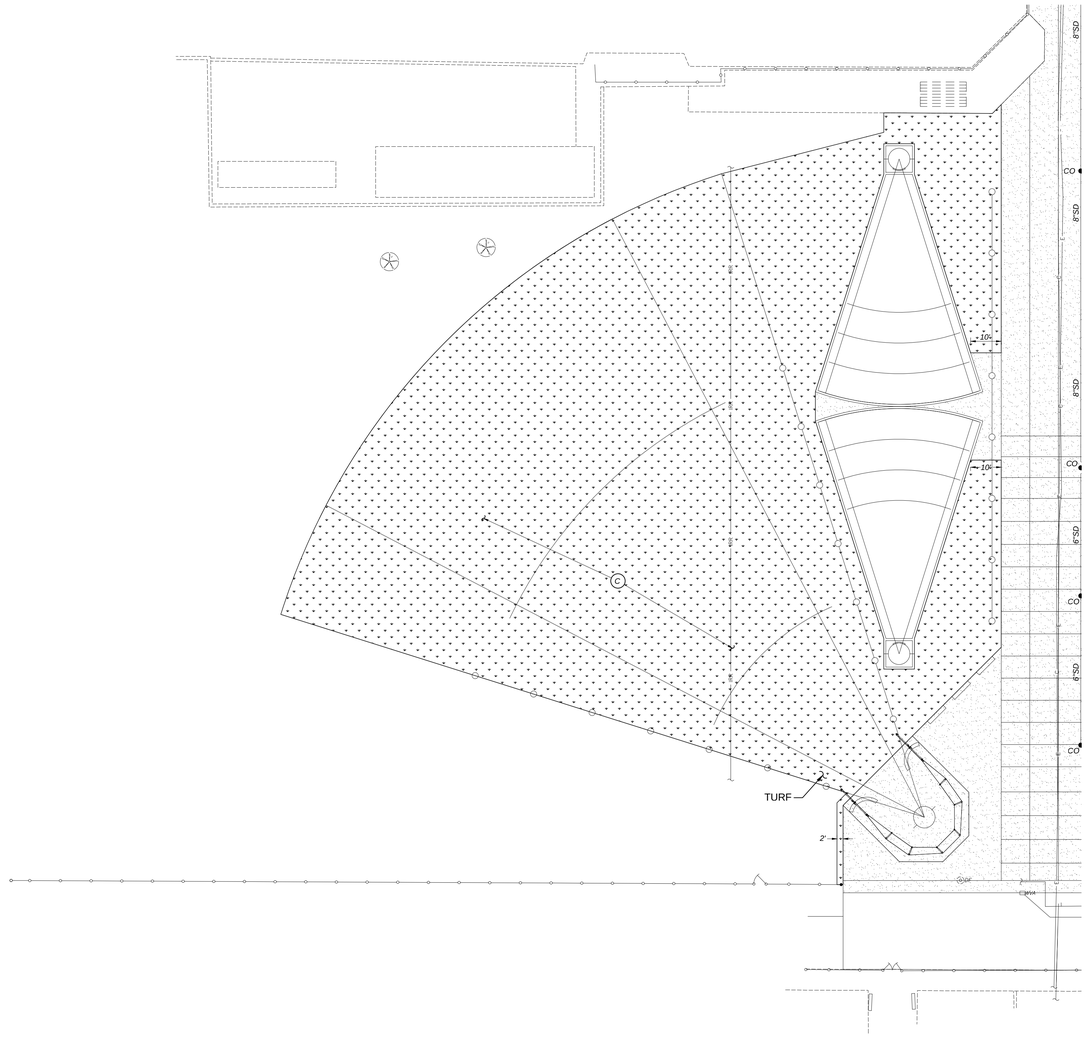

TREE SIZE AND QUALITY STANDARDS

AMERICAN STANDARDS FOR NURSERY STOCK (ANSI Z60.1) AND GUIDELINE SPECIFICATIONS FOR NURSERY TREE QUALITY (URBAN TREE FOUNDATION SHALL APPLY

	TYPES 1 & 2 SHADE TREES			TYPE 3 SMALL UPRIGHT TREES **			TYPE 4 SMALL SPREADING TREES ***		
CONTAINER SIZE	MIN. CALIPER	MAX. CALIPER	TYPE 1 MIN./MAX. HEIGHT *	MIN. CALIPER	MAX. CALIPER	MIN./MAX. HEIGHT	MIN. CALIPER	MAX. CALIPER	MIN./MAX. HEIGHT
15 GALLON	0.75	2.0	7-10 FT	0.75	2.0	6-8 FT	0.75	2.0	4-8 FT
24" BOX	1.25	3.0	8-12 FT	1.25	3.0	8-10 FT	1.25	3.0	6-10 FT
36" BOX	1.75	3.5	10-16 FT	1.75	3.5	10-14 FT	1.75	3.5	7-12 FT
42" BOX	2.0	4.0	12-20 FT	2.0	4.0	12-18 FT	2.0	4.0	8-14 FT
48" BOX	2.5	5.0	14-26 FT	2.5	5.0	14-22 FT	2.5	5.0	9-16 FT

* TYPE 2 TREE HEIGHTS SHALL NOT BE LESS THAN TWO-THIRDS THE LISTED HEIGHT RANGE.

** TYPE 3 TREES SHALL HAVE A MINIMUM OF SEVEN BRANCHES.

*** TYPE 4 TREES SHALL HAVE A MINIMUM OF EIGHT BRANCHES.

CALIPER MEASUREMENT FOR CLUMP OR MULTI-STEM TREES IS ONE-HALF THE SUM OF THE THREE LARGEST TRUNK CALIPERS.

CALIPER MEASUREMENT FOR <4" TRUNK IS +6" ABOVE ROOTBALL (NOT INCLUDING ROOTSTOCK). >4" TRUNK IS +12".

TREES SHALL HAVE A CENTRAL LEADER. NEW LEADERS LESS THAN HALF THE DIAMETER OF A HEADED LEADER; BROKEN OR CO-DOMINATE LEADERS ARE NOT ACCEPTABLE.

SCAFFOLD BRANCHES SHALL BE LESS THAN 2/3 THE DIAMETER OF THE TRUNK, WITHOUT INCLUDED BARK AT ATTACHMENT. SCAFFOLD BRANCHES SHALL BE BALANCED, WELL SPACED VERTICALLY, AND WITH A RADIALLY BLANK SECTOR NO GREATER THAN 1/3 OF THE CANOPY CIRCUMFERENCE.

TEMPORARY BRANCHES ON THE LOWER TRUNK SHALL BE LESS THAN 3/8 INCH DIAMETER; AND THE CLEAR TRUNK HEIGHT SHALL BE NO MORE THAN 40% OF THE TOTAL TREE HEIGHT.

THE ROOT COLLAR AND ROOTBALL SHALL BE FREE OF DEFECTS INCLUDING CIRCLING, KINKED AND GIRDLING ROOTS. ROOTS THE EDGE AND BOTTOM OF THE CONTAINER SHALL BE LESS THAN 1/4 INCH DIAMETER; AND UNIFORM THROUGHOUT THE CONTAINER.

TREE CANOPY WIDTH SHALL BE A MINIMUM OF 25% OF THE STANDARD FORM TREE HEIGHT.

DO NOT HEAD BACK OR PRUNE TREES UNLESS APPROVED AND/OR DIRECTED TO BY THE LANDSCAPE ARCHITECT.

LANDSCAPE PLANTING OBSERVATION LOG:

ITEM NO.	WORK ITEM DESCRIPTION	REVIEWED & ACCEPTED BY OWNER'S REPRESENTATIVE		
		PRINT NAME	SIGNATURE	DATE
PL-1	REPORT & PROTECTION OF EXISTING TREES			
PL-2	RIPPING OF PLANTING AREAS			
PL-3	SOIL CONDITIONING & TILLAGE DEPTH			
PL-4	IRRIGATION COVERAGE PRIOR TO PLANTING			
PL-5	FINISH GRADING PRIOR TO PLANTING			
PL-6	TREES - INITIAL QUALITY & LAYOUT			
PL-7	PLANTS - INITIAL QUALITY & LAYOUT			
PL-8	GRANULAR PRE-EMERGENT HERBICIDE IN MULCHED AREAS			
PL-9	WOOD MULCH DEPTH			

NOTES:
THE ORIGINAL VERSION OF THIS LOG SHALL BE MAINTAINED ON THE AS-BUILT RECORD DRAWING SET.
WORK ITEMS MAY NOT BE REVIEWED IF PRIOR WORK ITEMS HAVE NOT BEEN ACCEPTED.
IT IS THE CONTRACTOR'S RESPONSIBILITY TO ENSURE THAT THE OWNER'S REPRESENTATIVE IS NOTIFIED OF THESE MILESTONE WITNESS POINTS.

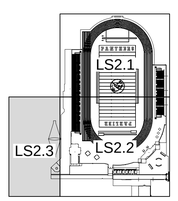

KEYMAP

SCALE: N 1"=20'
0 5 20 40
SCALE IN FEET

811 Know what's below. Call before you dig.

PARLIER HS STADIUM REPLACEMENT

603 3rd Street
Parlier, CA 93648

CLIENT PROJECT NO: 250093
DSA SUBMISSION
DSA APPL. NO. : 02-124002 DSA FILE NO. : 10-H12

PBK
FRESNO, CA 559-448-8400 www.pbk.com

PARLIER UNIFIED SCHOOL DISTRICT

Blair, Church & Flynn
CONSULTING ENGINEERS

LICENSED LANDSCAPE ARCHITECT
TIMOTHY M. BUSBY
12/31/25
RENEWAL DATE
5/14/2026
DATE
STATE OF CALIFORNIA

CLIENT
PARLIER UNIFIED SCHOOL DISTRICT
DATE 2026/02/09
PROJECT NUMBER 250093

DRAWING HISTORY

No.	Description	Date

CHECKED BY: GP
DRAWN BY: SD

PARTIAL PLANTING PLAN

LS2.3

Drawing: P:\234\224-040\Site\ProductionDrawings\224404_LA01.dwg, LS2.3 - ----
Plot by: gpineda Jun 19, 2026 - 5:04pm

PLANTING DETAILS
LS2.4

PLANT LEGEND:

TOTAL MIXED PLANTING AREA: 1,891 SQ FT — SUNSET ZONE: 9

SYMBOL	CODE	BOTANICAL / COMMON NAME	CONT	WATER USE	QTY	DETAIL	REMARKS
SMALL TREES							
	LAG DYN	LAGERSTROEMIA INDICA CRAPE MYRTLE	15 GAL	L	4	A/LS2.4	DECIDUOUS STANDARD FORM FULL SUN 25' H X 25' W
MEDIUM TREES							
	PIS KEI	PISTACIA CHINENSIS 'KEITH DAVEY' KEITH DAVEY CHINESE PISTACHE	24"BOX	L	15	A/LS2.4	DECIDUOUS STANDARD FORM FULL SUN 25-35' H X 25-35' W
VERY LARGE TREES							
	QUE LOB	QUERCUS LOBATA VALLEY OAK	24"BOX	L	8	A/LS2.4	DECIDUOUS STANDARD FORM FULL SUN CA NATIVE 60-100' H X 50' W
	ULM DRA	ULMUS PARVIFOLIA 'DRAKE' DRAKE LACEBARK ELM	24"BOX	M	2	A/LS2.4	SEMI-EVERGREEN STANDARD FORM 45' H X 35'-50' W

SYMBOL	CODE	BOTANICAL / COMMON NAME	SIZE	WATER USE	QTY	DETAIL	REMARKS
SHRUBS							
	DIE IRI	DIETES IRIDIOIDES FORTNIGHT LILY	1 GAL	L	18	B/LS2.4	PERENNIAL EVERGREEN FULL SUN 2-4' H X 2-3' W
	EUO AUR	EUONYMUS JAPONICUS 'AUREO-MARGINATUS' GOLDEN EUONYMUS	5 GAL	M	11	B/LS2.4	EVERGREEN FULL SUN TO PARTIAL SUN 6' H X 3' W
	IRI IRI	IRIS DOUGLASIANA DOUGLAS IRIS	5 GAL	L	3	B/LS2.4	PERENNIAL CA NATIVE SUN TO PART SHADE 1-3' H X 2-4' W
	NAN POW	NANDINA DOMESTICA 'FIREPOWER' FIREPOWER HEAVENLY BAMBOO	5 GAL	L	11	B/LS2.4	EVERGREEN FULL SUN TO PARTIAL SHADE 2-3' H X 2-3' W
	ROS OFF	ROSMARINUS OFFICINALIS ROSEMARY	1 GAL	L	3	B/LS2.4	EVERGREEN FULL SUN 2-6'H X 2-5'W
PERENNIALS							
	TUL VIO	TULBAGHIA VIOLACEA SOCIETY GARLIC	5 GAL	L	66	B/LS2.4	EVERGREEN PERENNIAL FULL SUN 1' H X 1' W
SUCCULENTS							
	HES YEL	HESPERALOE PARVIFLORA 'YELLOW' YELLOW YUCCA	5 GAL	L	16	B/LS2.4	EVERGREEN FULL SUN 2-3' H X 2-3' W
ORNAMENTAL GRASSES							
	DIA TAS	DIANELLA TASMANICA 'VARIEGATA' VARIEGATED FLAX LILY	5 GAL	M	56	B/LS2.4	EVERGREEN FULL SUN TO PARTIAL SHADE 2' H X 2' W
	FES CAL	FESTUCA CALIFORNICA CALIFORNIA FESCUE	1 GAL	L	6	B/LS2.4	EVERGREEN CA NATIVE SUN OR SHADE 2-3' H X 2-3' W

SYMBOL	CODE	BOTANICAL / COMMON NAME	CONT	WATER USE	QTY	DETAIL	REMARKS
GROUND COVERS							
	MULCH	WOOD MULCH WALK-ON BARK TYPE	N/A	N/A	1,136 SF	D/LS2.4	MIN. 3" COMPRESSED DEPTH. SEE PLANTING NOTE #18. QUANTITY IS IN ADDITION TO THAT PROVIDED IN THE MIXED PLANTING AREA.
	TURF	`CELEBRATION` BERMUDAGRASS	SOD	M	33,557 SF	G/LS2.4	CONTRACTOR SHALL MATCH EXISTING TURF SPECIES AND VARIETY
TURF							
	SYN TUR	SYNTHETIC TURF	N/A			F/LS2.4	
	RB	ROOT BARRIER UB24-2				E/LS2.4	
(A)		CONCRETE HEADER PER DETAIL [H/LS2.4]					
(B)		TREES TO BE INSTALLED BY OWNER					
(C)		CONTRACTOR SHALL REVIEW THE LIMITS OF DEMOLITION AND REPLACE TURF ACCORDINGLY					

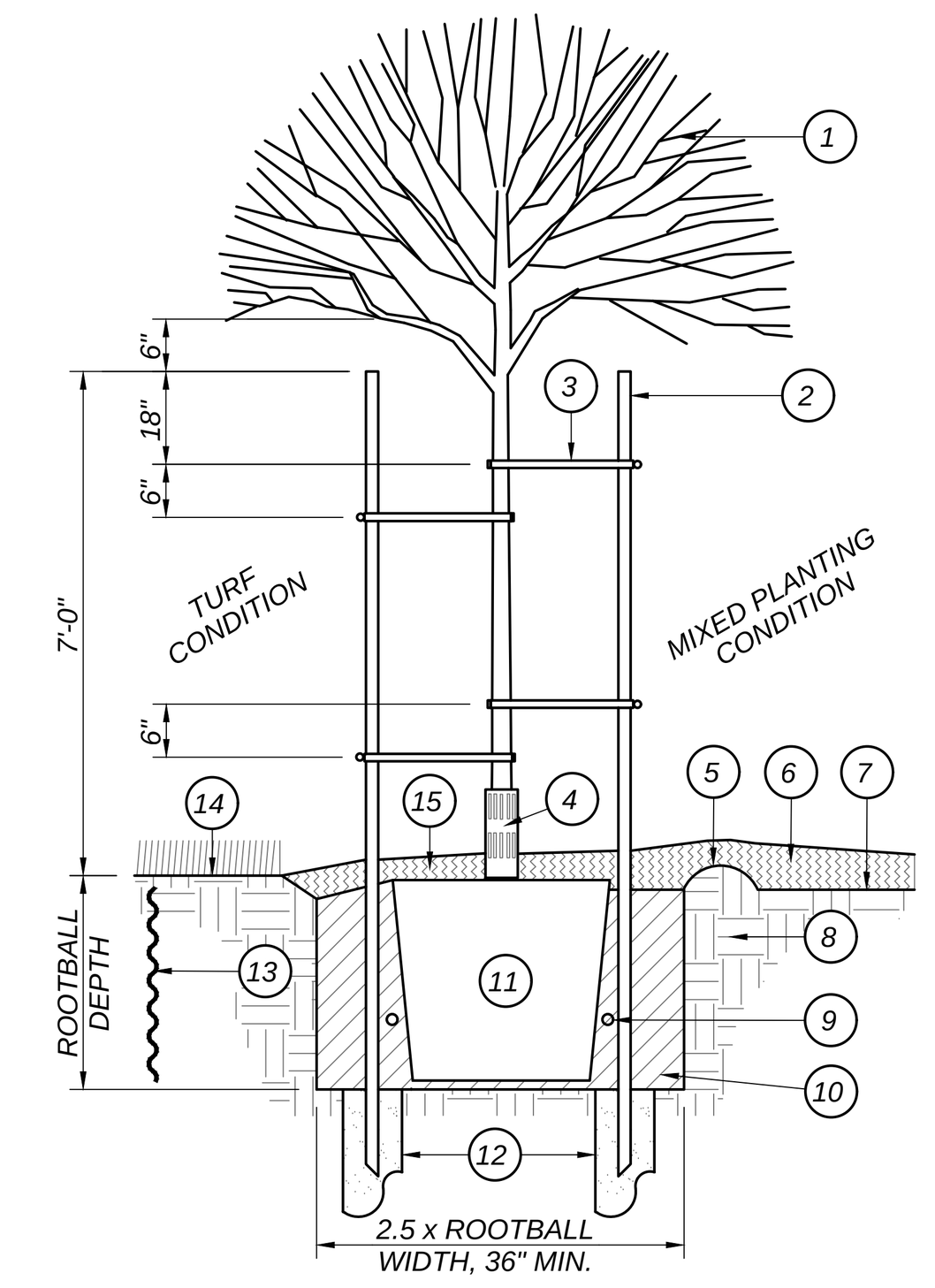

LEGEND:

1. TREE PER PLANTING PLAN.
2. 2" X 10' LODGEPOLE PINE STAKE. DO NOT DRIVE STAKE THROUGH ROOTBALL. CUT OFF TOP SECTION DAMAGED BY HAMMERING. TOP OF STAKE IS 6" CLEAR OF LOWEST TREE BRANCHES.
3. FLEXIBLE VINYL TREE TIE, 4 / TREE (V.I.T. OR APPROVED EQUAL.)
4. TREE TRUNK PROTECTOR (GRAY) WHERE TREE IS IN TURF AREA.
5. 4" HIGH WATERING BERM.
6. ADJACENT PLANTING AREA WITH MULCH WHERE OCCURS.
7. FINISH GRADE.
8. SITE SOIL.
9. PLANT FERTILIZER TABLET. SEE SPECIFICATIONS.
10. AMENDED BACKFILL. SEE SPECIFICATIONS.
11. ROOTBALL. SET TOP OF ROOTBALL 2" ABOVE FINISH GRADE.
12. DRAINAGE SUMP: 12" DIA. PER DRAINAGE SUMP NOTES. FILL WITH CONCRETE SAND PER SSPWC 200-1.5.5.
13. ROOT CONTROL BARRIER WHERE REQUIRED. SEE GENERAL PLANTING NOTES AND DETAIL [E/LS2.4].
14. ADJACENT TURFGRASS PLANTING WHERE OCCURS.
15. MULCH, MINIMUM 3" DEPTH. SEE GENERAL PLANTING NOTE 17.

DRAINAGE SUMP NOTES:

A. DRAINAGE SUMPS SHALL PENETRATE THROUGH AND BEYOND ANY UNDERLYING PAVEMENT OR HARDPAN SOIL STRATUM, AND SUCH PAVEMENT OR HARDPAN MATERIAL SHALL BE REMOVED FROM THE SUMP HOLES.

B. THE SUMP HOLE SHALL BE DRILLED TO MINIMUM DEPTH OF TEN (10) FEET, UNLESS VISUAL EVIDENCE OF A SUBSURFACE SAND AND/OR GRAVEL DRAINAGE STRATUM IS APPARENT AT A LESSER DEPTH. THE SUMP HOLES SHALL EXTEND INTO THE DRAINAGE STRATUM A MINIMUM OF ONE (1) FOOT.

A / LS2.4 — DOUBLE STAKE TREE PLANTING
NOT TO SCALE

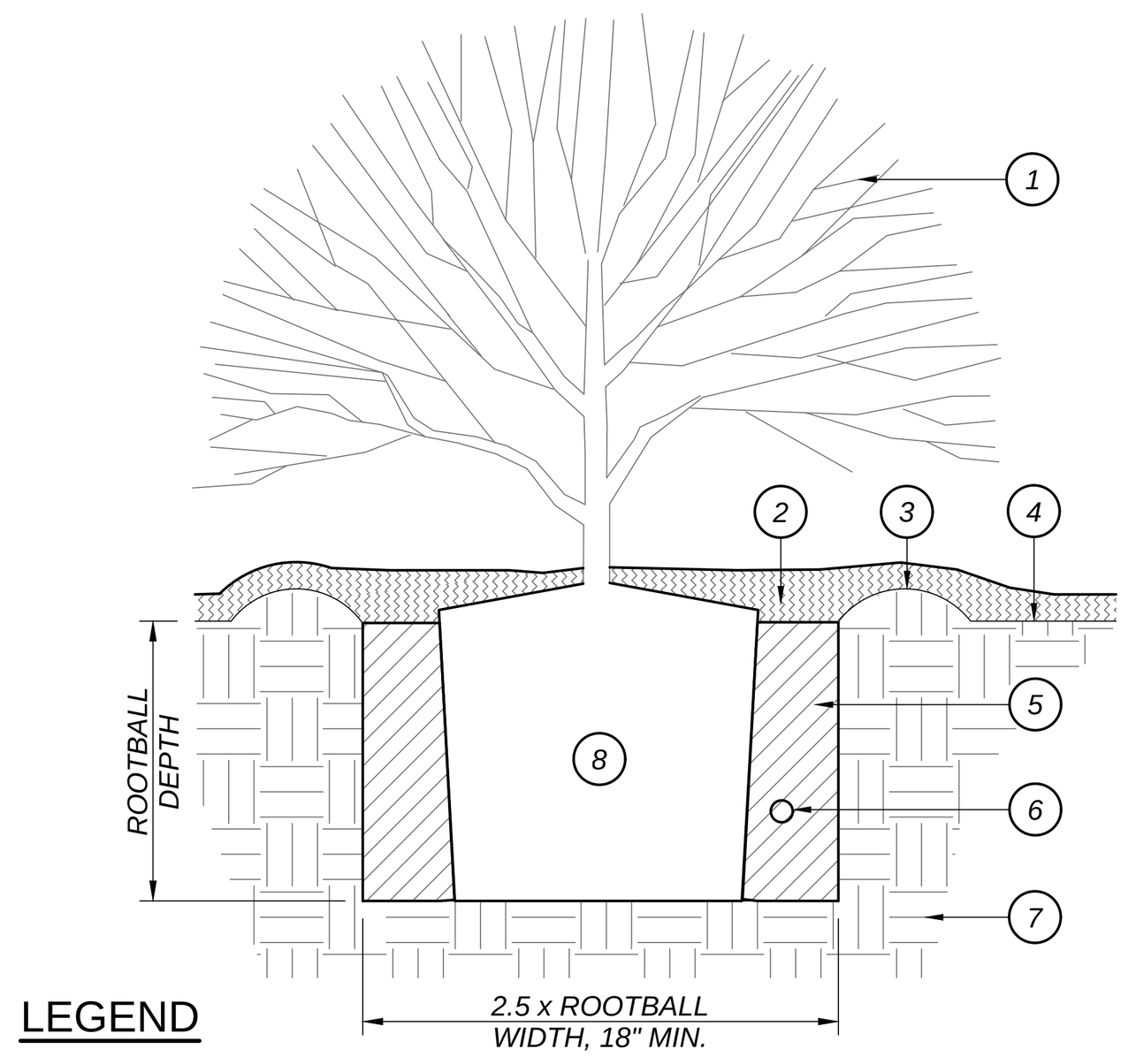

LEGEND

1. SHRUB.
2. WOOD MULCH LAYER.
3. 3" HIGH WATERING BASIN.
4. FINISH GRADE.
5. AMENDED BACKFILL. SEE SPECIFICATIONS.
6. FERTILIZER PACKET. SEE SPECIFICATIONS.
7. SITE SOIL.
8. ROOTBALL. SET TOP OF ROOTBALL 1" ABOVE FINISH GRADE.

B / LS2.4 — SHRUB PLANTING
NOT TO SCALE

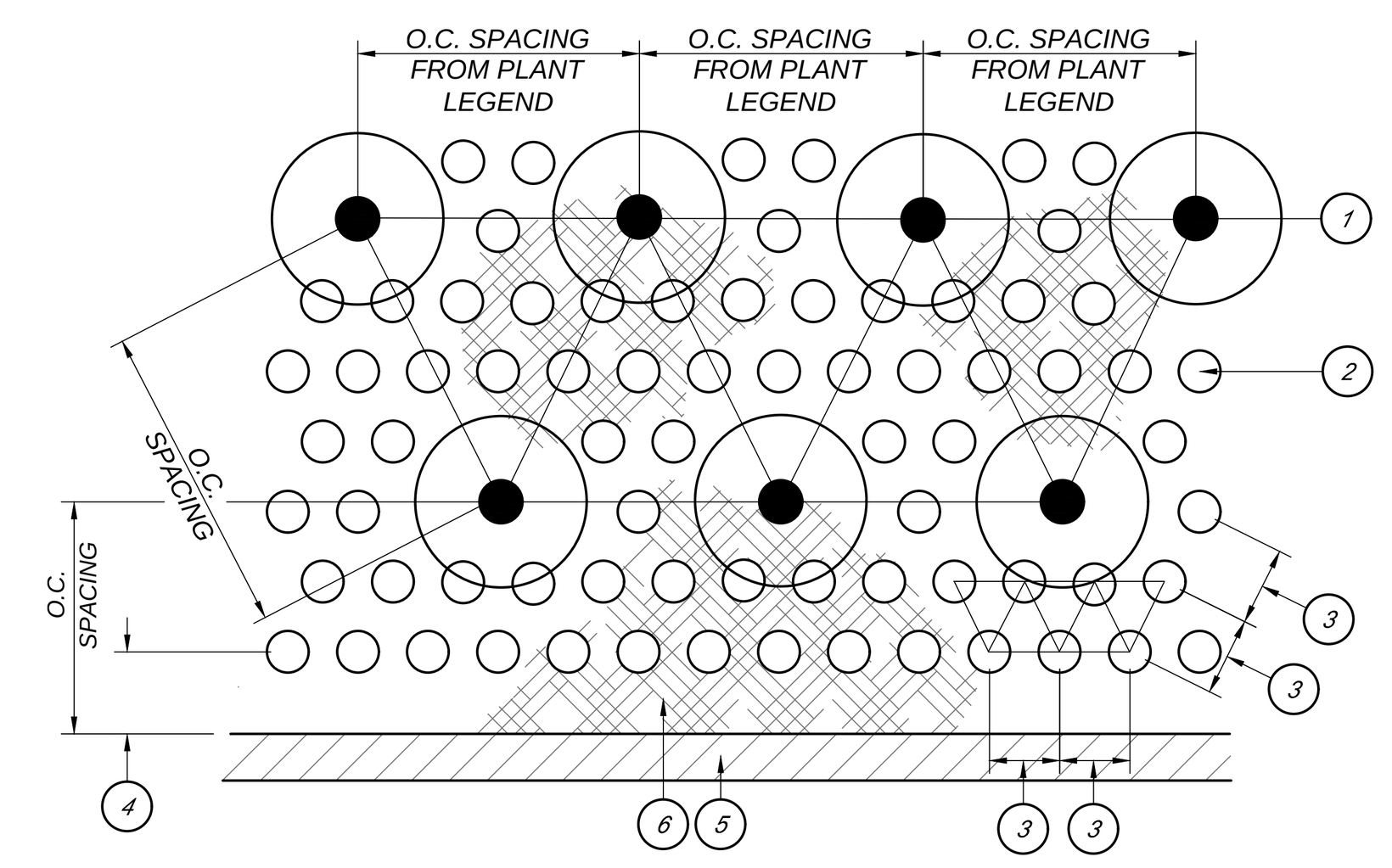

LEGEND:

1. CONTAINER SHRUB OR GROUND COVER IN TRIANGULATED ROWS, SEE SHRUB PLANTING PER DETAIL [B/LS2.4].
2. GROUND COVER FLATS OR LINERS - TRIANGULATED ROWS.
3. SPACE PER PLANT LEGEND. OMIT PLANTS WHERE IN CONFLICT WITH SHRUBS OR TREE WATERING BASINS.
4. SPACING DISTANCE FROM PLANT LEGEND.
5. HARDSCAPE ELEMENT: CURB, WALK, ETC.
6. MULCH PER SPECIFICATIONS.

C / LS2.4 — SHRUB AND GROUND COVER SPACING
NOT TO SCALE

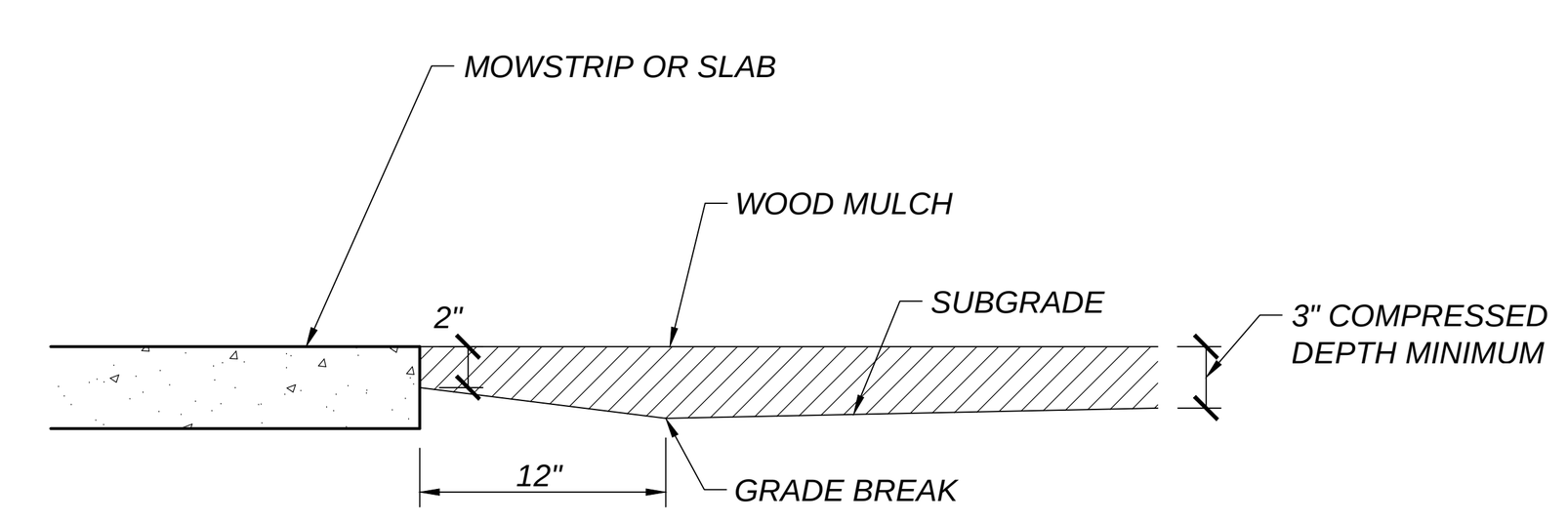

D / LS2.4 — MULCH DETAIL
NOT TO SCALE

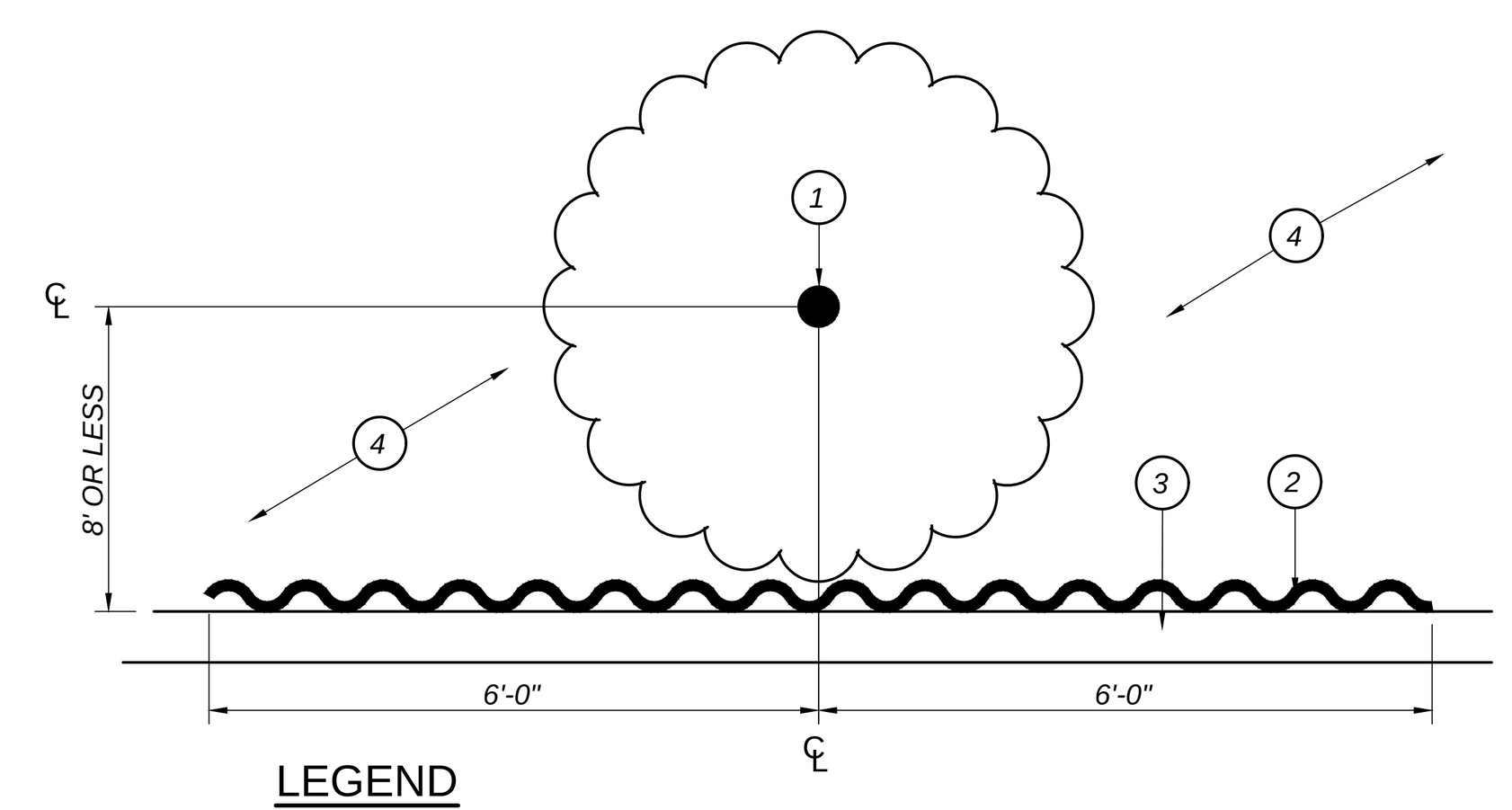

LEGEND

1. TREE TRUNK.
2. 12 LF OF 24"-DEEP ROOT CONTROL BARRIER: DEEP ROOT UB24-2 OR EQUIVALENT. CENTER BARRIER ON TRUNK OF TREE. INSTALL PER MANUFACTURER'S SPECIFICATIONS.
3. HARDSCAPE ELEMENT: CURB, SIDEWALK, WALL, ETC.
4. PLANTING AREA.
5. INSTALL ROOT CONTROL BARRIER ON ALL SIDES OF THE PLANTING AREA WHEN SURROUNDED BY HARDSCAPE WITHIN 8' OF THE TREE TRUNK.

E / LS2.4 — ROOT CONTROL BARRIER
NOT TO SCALE

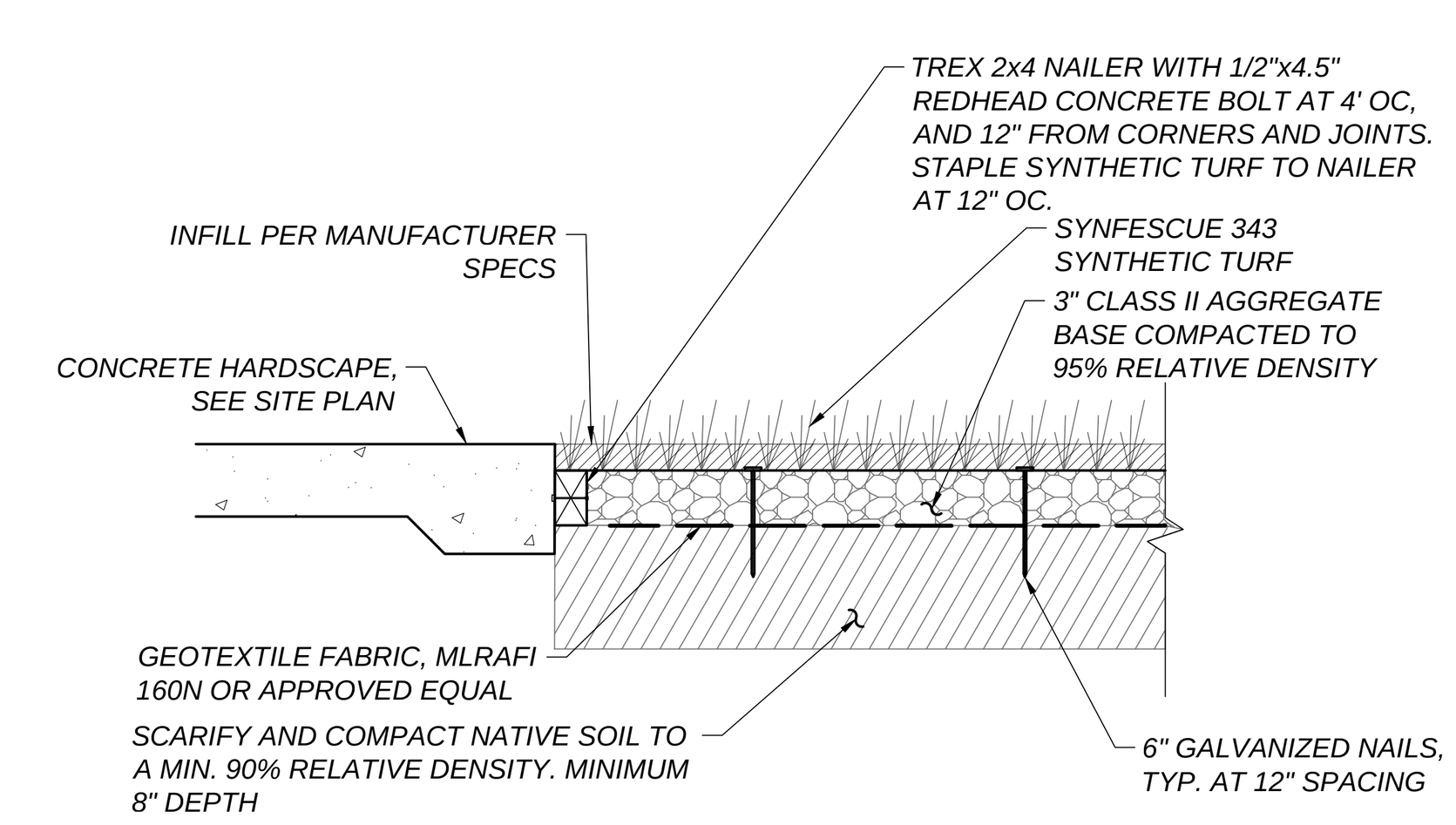

F / LS2.4 — SYTHENTIC TURF
NOT TO SCALE

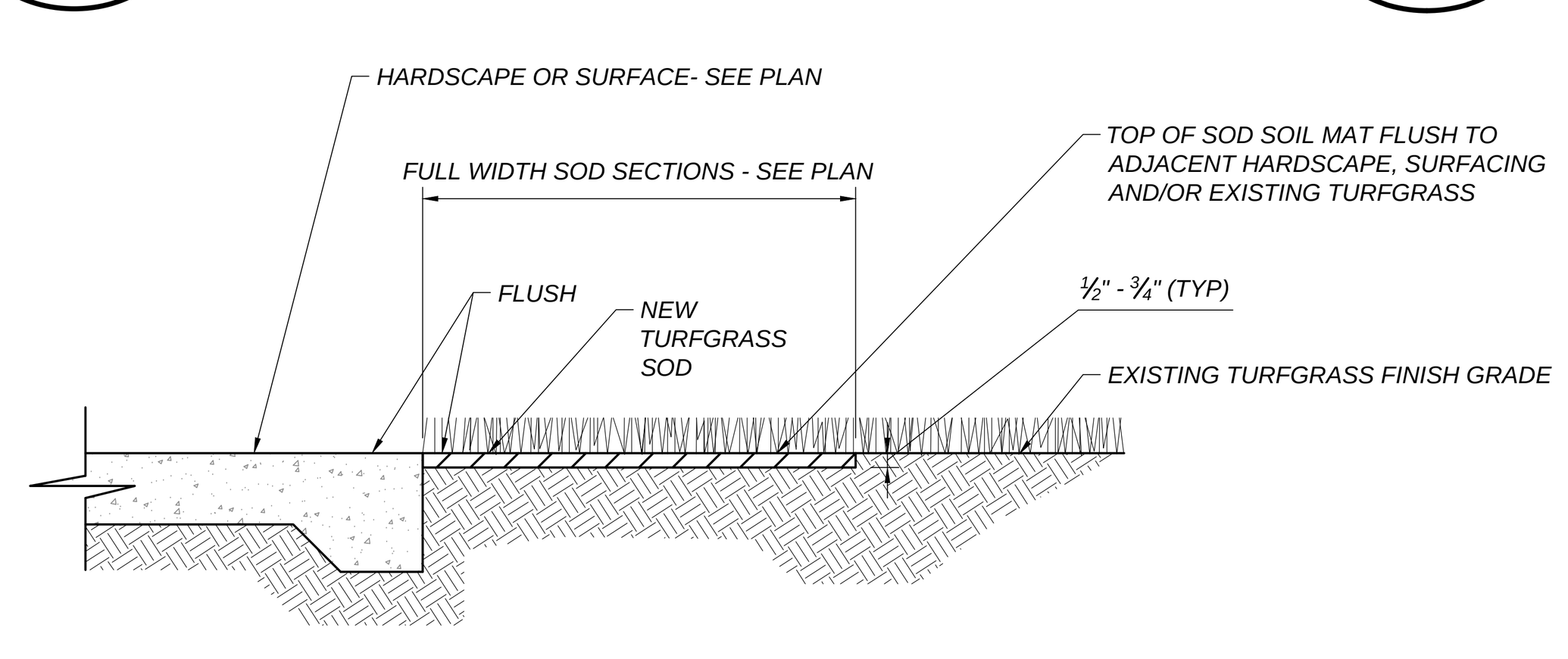

NOTE:

IF THE EXISTING TURFGRASS FINISH GRADE IS HIGHER OR LOWER THAN THE NEW FINISH SURFACE, TRANSITION GRADE THE NEW SOD AT A MAXIMUM 1V:12H SLOPE

G / LS2.4 — TURF SOD INSTALLATION
NOT TO SCALE

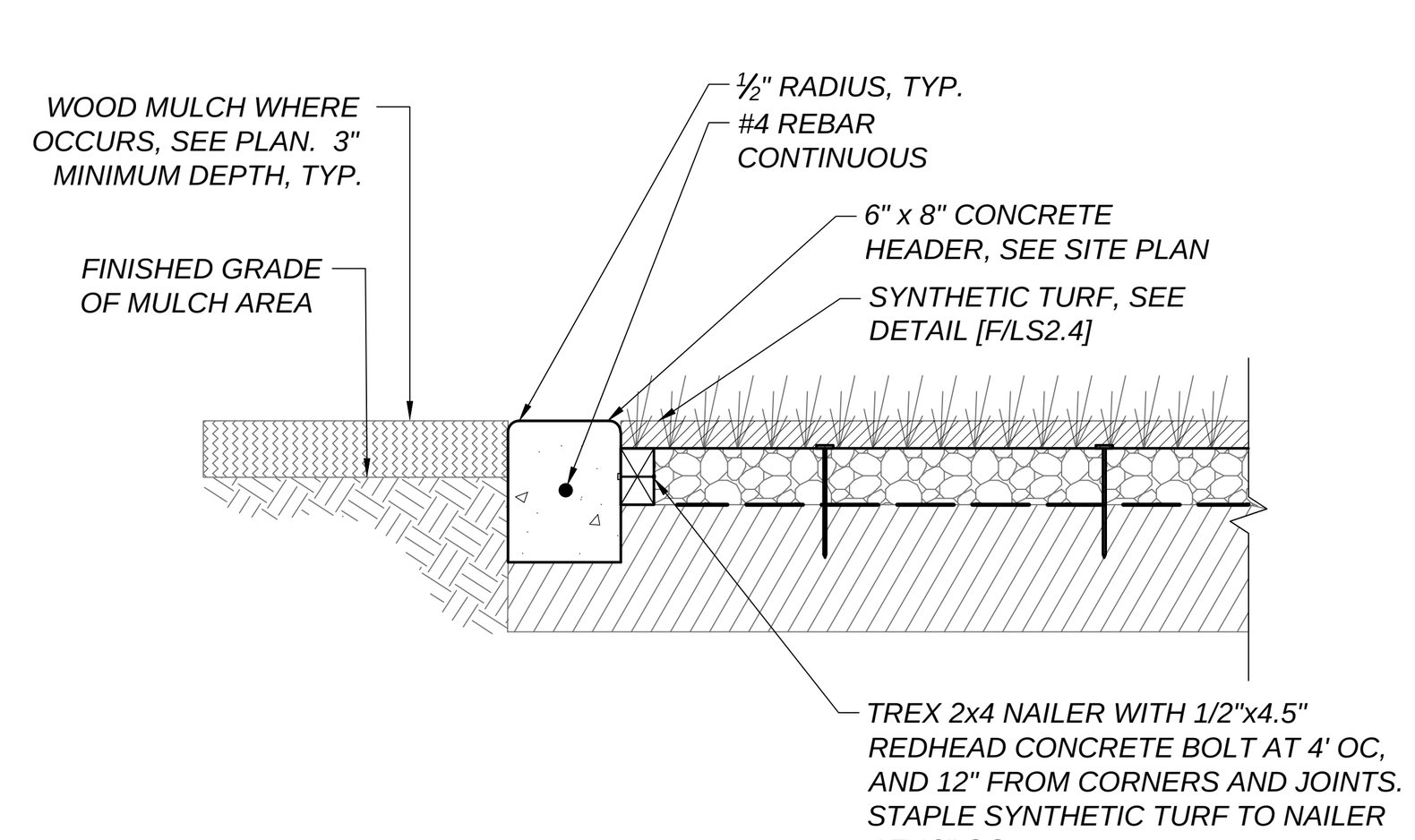

H / LS2.4 — SYTHENTIC TURF AT HEADER
NOT TO SCALE

PLANTING NOTES:

1. IMMEDIATELY NOTIFY THE OWNER'S REPRESENTATIVE IF IT IS OBVIOUS THAT OBSTRUCTIONS OR STRUCTURES, IRRIGATION SYSTEM MALFUNCTION, EXISTING TREES OR PLANTS, GRADE DIFFERENCES OR CHANGES IN THE SITE PLAN ARE PRESENT THAT WILL IMPACT THE PLANTING DESIGN. FAILURE TO GIVE SUCH NOTIFICATION SHALL PLACE THE RESPONSIBILITY ON THE CONTRACTOR FOR ANY REVISIONS OR REPLACEMENTS NECESSARY FOR CORRECTION.
2. ANY EXISTING PLANTING SHOWN ON THE PLAN IS FOR REFERENCE ONLY. THE CONTRACTOR SHALL VERIFY THE EXISTING PLANTING AT THE SITE PRIOR TO STARTING WORK. UNLESS NOTED OTHERWISE, THE CONTRACTOR SHALL PROTECT THE EXISTING PLANTING ADJACENT TO THE WORK FROM DAMAGE OR DISTRESS.
3. ALL TREES AND SHRUBS SHALL BE OF CLASS A QUALITY WITHOUT PESTS, DISEASE OR DAMAGE, SHALL BE WELL ESTABLISHED IN THEIR CONTAINERS WITHOUT GIRDLING ROOTS OR EXCESSIVE TOP GROWTH, AND SHALL COMPLY WITH THE REQUIREMENTS OF THE "AMERICAN STANDARDS FOR NURSERY STOCK" (ANSI Z60.1).
4. NOTIFY THE LANDSCAPE ARCHITECT PRIOR TO THE INSTALLATION OF IRRIGATION COMPONENTS AND TREE AND/OR SHRUB PLANTING FOR APPROVAL OF THE PLANT LAYOUT AND PLANT QUALITY. PLANT LOCATIONS SHALL AVOID CONFLICTS WITH EXISTING IMPROVEMENTS, PLANTINGS OR UTILITIES, LIGHT POLES WHILE MEETING THE DESIGN INTENT. DO NOT PLANT TREES WITHIN 15 FEET OF LIGHT POLES UNLESS SPECIFICALLY AUTHORIZED. FAILURE TO OBTAIN SUCH APPROVAL SHALL PLACE THE RESPONSIBILITY ON THE CONTRACTOR FOR ANY RELOCATION OR REPLACEMENT OF IRRIGATION COMPONENTS, PLANTED TREES AND/OR SHRUBS.
5. PLANT QUANTITIES ARE PROVIDED FOR BIDDING CONVENIENCE ONLY. THE CONTRACTOR SHALL PROVIDE SUFFICIENT QUANTITIES OF PLANTS EQUAL TO THE SYMBOL COUNT OR TO FILL THE AREA SHOWN ON THE PLAN AT THE SPECIFIED TRIANGULAR SPACING.
6. WHERE GROUND COVER PLANTS ARE SHOWN AT A SPECIFIED SPACING, THE GROUND COVER PLANTING CONTINUES UNDERNEATH THE TALLER SHRUBS AND TREES AS SHOWN IN THE PLANTING DETAILS. DO NOT PLANT GROUND COVER IN SHRUB OR TREE WATERING BASINS.
7. ALL NEW TREES LOCATED WITHIN 8 FEET OF PAVEMENT OR STRUCTURES SHALL HAVE A ROOT CONTROL BARRIER INSTALLED WHEN PLANTED. UNLESS OTHERWISE SPECIFIED, INSTALL A 12 FOOT LONG X 24 INCH DEEP LINEAR POLYETHYLENE BARRIER VESPRO OR EQUAL AT THE EDGE OF PAVEMENT/STRUCTURE, CENTERED ON THE TREE TRUNK AS SHOWN IN THE PLANTING DETAILS.
8. REMOVE NURSERY STAKES FROM TREES AFTER TREE STAKING OR GUYING AS SHOWN IN THE DETAILS.
9. INSTALL PERFORATED POLYETHYLENE TREE TRUNK PROTECTORS FOR ALL NEW TREES PLANTED IN TURF. UNLESS NOTED OTHERWISE, MAINTAIN A MINIMUM 6 FOOT DIAMETER MULCHED AREA AT THE BASE OF THE TREE INSIDE THE WATERING BASIN.
10. THE CONTRACTOR SHALL PRUNE NEW TREES ONLY WHEN SPECIFICALLY DIRECTED BY THE LANDSCAPE ARCHITECT. TREES HEADED BACK WITHOUT INTACT SCAFFOLDING BRANCH STRUCTURE OR IN ROOT-BOUND CONTAINERS SHALL BE REJECTED.
11. SUBMIT REPRESENTATIVE SOIL SAMPLES OF NATIVE AND PROPOSED IMPORT, IF NEEDED, PLANTING TOPSOIL TO A SOIL LAB FOR HORTICULTURAL ANALYSES AND FERTILITY RECOMMENDATIONS. AMEND SOIL ACCORDING TO THE RECOMMENDATIONS OF THE SOILS REPORT AND LANDSCAPE ARCHITECT'S DIRECTION. SEE THE LANDSCAPE PLANTING SPECIFICATIONS FOR ADDITIONAL INSTRUCTIONS.
12. PROVIDE SANDY LOAM TOPSOIL PER SPECIFICATION IN ALL RAISED PLANTERS AND WHERE IMPORT TOPSOIL IS REQUIRED. NATIVE SITE SOIL MAY BE USED IN RAISED PLANTERS ONLY WHEN THE NATIVE SITE SOIL MEETS THE CRITERIA FOR SANDY LOAM TOPSOIL AS DETERMINED BY A SOIL ANALYSIS.
13. PRIOR TO SOIL CONDITIONING IN NEW PLANTING AREAS, RIP IN TWO DIFFERENT DIRECTIONS WITH TINES AT 12 INCH SPACING, ALL TURFGRASS AREAS TO A 12 INCH DEPTH, AND SHRUB/GROUND COVER AREAS TO A 18 INCH DEPTH. ROUGH GRADE AND TILL THE APPROVED SOIL CONDITIONERS AND FERTILIZERS INTO THE TOP SIX (6) INCHES OF ALL PLANTING AREAS PER THE LANDSCAPE PLANTING SPECIFICATIONS. COMPOST RATE SHALL BE A MINIMUM OF SIX (6) CUBIC YARDS PER 1,000 SQUARE FEET OR AS MODIFIED BY THE LANDSCAPE ARCHITECT BASED ON THE SOUL FERTILITY ANALYSIS.
14. UPON THE COMPLETION OF THE SOIL CONDITIONING, REMOVE ROCKS AND CLODS 1 INCH DIAMETER AND GREATER FROM THE TOP TWO INCHES OF TOPSOIL, AND ALL DEBRIS. FINISH GRADE THE AREA TO +/- 0.04 FOOT TOLERANCE. FINISH GRADE IN MULCHED AREAS SHALL BE STRAIGHT GRADES WITHOUT HUMPS OR DEPRESSIONS AND SHALL BE 2 INCHES BELOW ADJACENT HARDSCAPE, INLETS OR UTILITY BOX COLLARS. RELATIVE DENSITY OF THE TOPSOIL SHALL NOT EXCEED 85% COMPACTION.
15. OBTAIN THE APPROVAL OF THE OWNER'S REPRESENTATIVE TO BEGIN PLANTING OPERATIONS ONCE THE IRRIGATION SYSTEM IS OPERATIONAL AND THE SOIL CONDITIONING AND FINISH GRADING IS COMPLETED.
16. AFTER PLANTING IS COMPLETED AND JUST PRIOR TO MULCH INSTALLATION, APPLY A BROAD SPECTRUM PRE-EMERGENT HERBICIDE TO ALL NON-TURFGRASS PLANTING AREAS PER THE MANUFACTURER'S SPECIFICATIONS.
17. WHERE MULCH IS TO BE INSTALLED IN AN EXISTING PLANTING AREA, BREAKUP/TILL THE EXISTING SOIL TO A MINIMUM 6 INCH DEPTH PER SPECS, AND ADJUST FINISH GRADE ADJACENT TO HARDSCAPE AND DRAINAGE ELEMENTS TO PROVIDE A 2 INCH DEPTH THAT TRANSITIONS TO THE EXISTING GRADE OVER 1 TO 2 FEET.
18. INSTALL A MINIMUM 3 INCH DEPTH OF CHIPPED WALK-ON WOOD MULCH IN ALL PLANTING AREAS AND TREE WATERING BASINS EXCEPT FOR TURFGRASS AREAS, SLOPES 3H:1V OR GREATER, AREAS TO RECEIVE SEED PLANTING, OR AS NOTED ON THE PLAN. AREAS PLANTED WITH FLATS SHALL HAVE A MINIMUM MULCH DEPTH OF 2 INCHES. INSTALL A MINIMUM 3 FOOT RADIUS OF 3 INCH DEEP WOOD MULCH AT THE BASE OF ALL TREES IN NEW TURFGRASS AREAS.
19. ALL EXISTING PLANTS AND/OR TURFGRASS SHOWN TO REMAIN AND DAMAGED OR REMOVED BY CONSTRUCTION OPERATIONS AND/OR UTILITY/IRRIGATION/DRAINAGE LINES SHALL BE REPLACED WITH PLANTS THAT MATCH AS CLOSELY AS POSSIBLE TO THE EXISTING PLANT SPECIES, VARIETY AND SIZE. THE REPLACEMENT TURFGRASS SOD VARIETY SHALL BE THE SAME AS SHOWN IN THE PLANTING LEGEND AS IF FOR NEW WORK, OR SHALL MATCH THE EXISTING TURFGRASS VARIETY WHERE EXISTING. TILL SOIL CONDITIONING MATERIALS INTO THE TOP 6 INCHES OF THE SOIL OVER THE AREA OF REPAIR/REPLACEMENT AS IF FOR NEW WORK. ADJUST FINISH GRADE SO NEW TURFGRASS SOD ABUTS FLUSH TO EXISTING SOD GRADE. THE REPLACEMENT PLANTS AND/OR TURFGRASS SOD SHALL BE MAINTAINED AS PART OF THE ORIGINAL SCOPE OF WORK. THE REPAIR OR REPLACEMENT WORK SHALL BE AT THE CONTRACTOR'S SOLE EXPENSE.
20. CONTRACTOR SHALL MAINTAIN THE NEW PLANTING FOR HEALTHY AND VIGOROUS GROWTH, WHICH INCLUDES BUT IS NOT LIMITED TO WATERING, WEEDING, FERTILIZING, MOWING AND EDGING (AT LEAST ONCE A WEEK), REMOVING TRASH AND DEBRIS, AND OTHER RELATED ACTIVITIES THROUGHOUT THE DURATION OF THE MAINTENANCE PERIOD UNTIL FINAL ACCEPTANCE.

CONTRACTOR SPECIAL PLANTING NOTES:

1. AN ASSESSMENT AND VALUATION OF ONSITE EXISTING TREES SCHEDULED TO REMAIN IN THE AREA OF WORK SHALL BE PERFORMED BY THE CONTRACTOR'S ARBORIST PRIOR TO THE START OF CONSTRUCTION OPERATIONS PER THE 'EXISTING LANDSCAPE PROTECTION' SPECIFICATION.
2. THE CONTRACTOR SHALL RIP, CONDITION AND TILL THE ENTIRE EXTENT OF ALL PLANTING AREAS RECEIVING NEW PLANTS PER THE PLANTING NOTES AND 'LANDSCAPE PLANTING' SPECIFICATIONS.
3. ALL EXISTING MIXED PLANTING AREAS RECEIVING NEW WOOD MULCH SHALL BE MANUALLY TILLED TO A MINIMUM DEPTH OF 4 INCHES, CLODS BROKEN UP TO A MAXIMUM 1 INCH DIAMETER, FINISH GRADED TO 2 INCHES BELOW ADJACENT SURFACES AND UTILITY/IRRIGATION BOXES WITHIN 12 INCHES OF THE HARDSCAPE EDGE OR BOX, AND A GRANULAR PRE-EMERGENT HERBICIDE APPLIED PRIOR TO WOOD MULCH INSTALLATION. PROTECT EXISTING PLANTING DURING WOOD MULCH PREPARATION AND INSTALLATION.
4. THE ORIGINAL PLANTING OBSERVATION LOG SHALL BE MAINTAINED ON THE AS-BUILT RECORD DRAWING SET.
5. THE AS-BUILT RECORD DRAWING SET AND MAINTENANCE MANUAL SHALL BE SUBMITTED AND ACCEPTED PRIOR TO THE SCHEDULING OF A FINAL ACCEPTANCE REVIEW.

Know what's below. Call before you dig.

PBK
www.pbk.com
559-448-8400
FRESNO, CA

PARLIER HS STADIUM REPLACEMENT

603 3rd Street
Parlier, CA 93648

CLIENT PROJECT NO: 250093
DSA SUBMISSION
DSA APPL. NO. : 02-124002 DSA FILE NO. : 10-H12

PARLIER UNIFIED SCHOOL DISTRICT

Blair, Church & Flynn
CONSULTING ENGINEERS

LICENSED LANDSCAPE ARCHITECT — W. BRILEY NO. — Signature — 12/31/26 Renewal Date — 5/14/2026 Date — STATE OF CALIFORNIA

CLIENT	
PARLIER UNIFIED SCHOOL DISTRICT	
DATE 2026/02/09	PROJECT NUMBER 250093

DRAWING HISTORY

No.	Description	Date

CHECKED BY: GP
DRAWN BY: SD

PLANTING DETAILS

LS2.4

Drawing: P:\224\224-0404\Site\ProductionDrawings\224404_LADT01.dwg; Planting Details - ----
Plot by: gpineda Jun 19, 2026 - 5:04pm

OVERALL SITE PLAN
AS1.1
FOR BLUEBEAM LABELING/OCR:

	MATERIAL	FINISH	REMARKS
SITE DEVELOPMENT	**PAVEMENT**		
	ASPHALT CONCRETE	SLURRY SEAL	
	STRIPING AND MARKINGS	REFER TO CIVIL	
	WHEELSTOPS	NATURAL CAST CONCRETE	
	CHAIN LINK		
	FENCES, GATES, POSTS, RAILS, PICKETS, GATES AND ALL ACCESSORIES	GALVANIZED	
	CAST-IN-PLACE CONCRETE		
	CURBS, CURB AND GUTTERS, MOWSTRIPS, APRONS, VALLEY GUTTER HOUSEKEEPING PADS, SITE LIGHT POLE BASES	NATURAL CAST CONCRETE	
	WALKS, PLATFORMS, STEPS, RAMPS	BROOM FINISH	
	~~ARCHITECTURAL SIGNS AND PLAQUES, LANDSCAPE FURNISHING, ETC.~~	~~LIGHT SAND BLAST~~	
	SEAT WALLS & PLANTER WALLS	NATURAL CAST CONCRETE	
	CONCRETE MASONRY UNITS		
	BLOCK, BLOCK VENEER, & MORTAR	SPLIT-FACED ONE SIDE AND PRECISION-FACED ON OPPOSITE SIDE, U.O.N.	1,5
	MANUFACTURED STONE MASONRY: BRICK VENEER		3, 4
	METAL FABRICATIONS		
	MISCELLANEOUS STEEL, GATES, ETC.	E_U-GM-1	2
	BLEACHER STRUCTURE		
	BLEACHER PANELS		
	BLEACHER PRESS BOX		
	HARDWARE		
	CHAIN LINK GATE, HINGES, CMU GATE HINGES, HASPS, CANE BOLTS, ETC.	GALVANIZED	
	ORNAMENTAL METAL		
	FENCES, GATES, ACCESSORIES	FF, BLACK ENAMEL	

REMARKS

1. MANUFACTURED BY BASALITE. COLOR: I-388, MORTAR: AMERIMIX TYPE "S" 618.
2. REFER TO SPEC SECTION 09 90 00, PART 4 "SCHEDULES"
3. MANUFACTURED BY EL DORADO STONE. PRODUCT: TUNDRASTONE. COLOR: HARTFORD
4. REFER TO DETAIL G/X1.2
5. E_CICMU-1 AT CMU ENCLOSURE

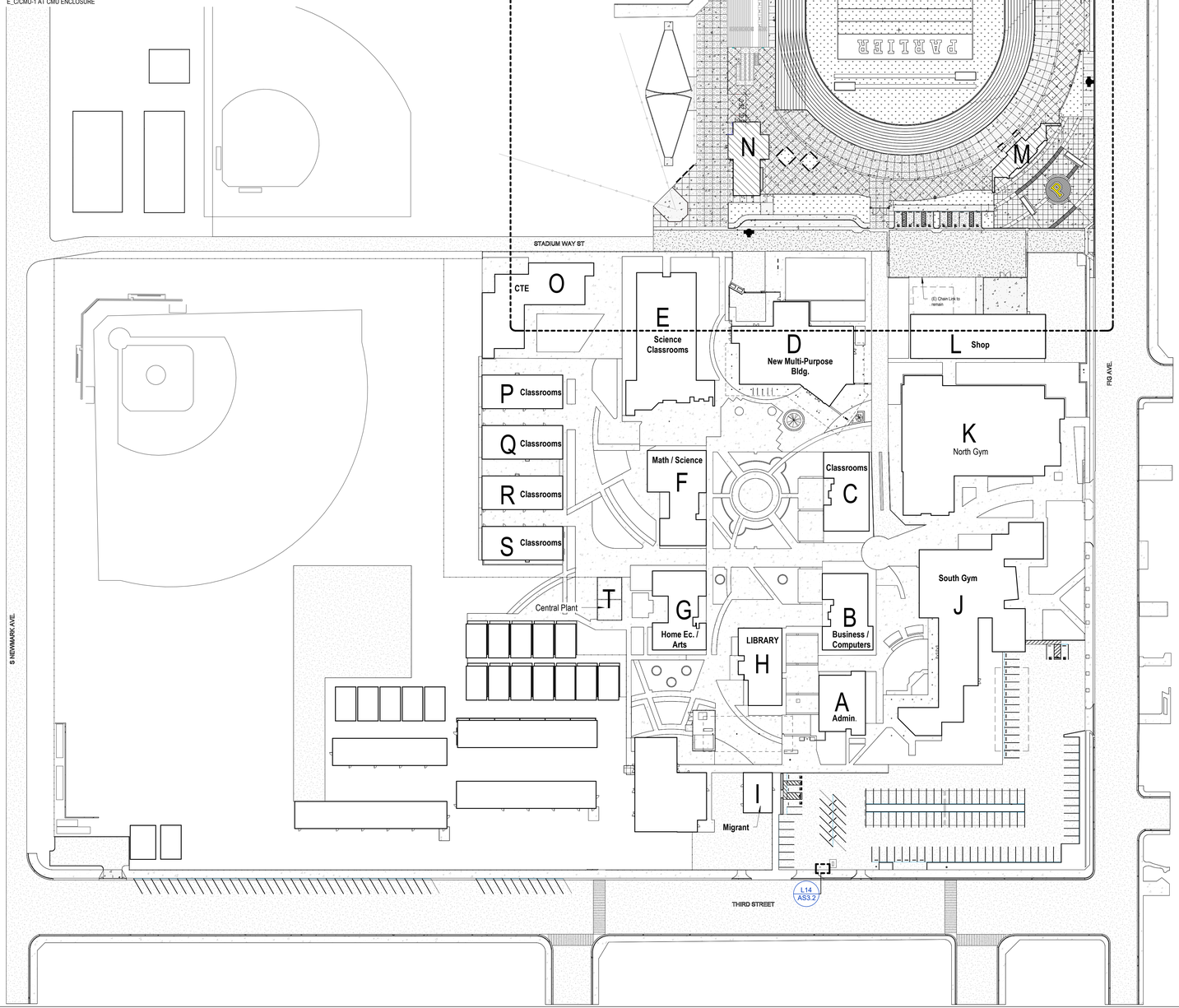

A13 SITE PLAN
1" = 60'-0"

GENERAL SITE PLAN NOTES

1. REFER TO CIVIL & LANDSCAPE PLANS FOR ANY ADDITIONAL SITE INFORMATION
2. PLUMBING: REFER TO PLUMBING DRAWINGS, TYP
3. NOT USED
4. ELECTRICAL: REFER TO ELECTRICAL DRAWINGS, TYP
5. NOT USED
6. PROVIDE POSITIVE DRAINAGE AWAY FROM ALL BUILDINGS OF 1% MINIMUM, 2% MAXIMUM AT ALL EXTERIOR PAVED PEDESTRIAN AREAS, INCLUDING BUT NOT LIMITED TO SIDEWALKS, PATIOS, STAIRS, PAVING, UNO
7. PROVIDE AND INSTALL POSITIVE DRAINAGE AWAY FROM ALL BUILDINGS OF 5% FOR A HORIZONTAL DISTANCE OF 10 FEET AT ALL EXTERIOR NON-PAVED AREAS UNO
8. VERIFY AND CONFIRM ALL JOINT LAYOUTS AT ALL CONCRETE SIDEWALKS WITH ARCHITECT PRIOR TO POURING OF CONCRETE
9. PROVIDE AND INSTALL CONCRETE SIDEWALK EXPANSION JOINTS AT AREAS NOT SPECIFICALLY INDICATED AT 50 FEET ON-CENTER MAX. UNO
10. PROVIDE AND INSTALL CONCRETE SIDEWALK CONTROL JOINTS AT AREAS NOT SPECIFICALLY INDICATED AT DISTANCES EQUIVALENT TO SIDEWALK WIDTH, BUT NOT TO EXCEED 10 FEET ON-CENTER MAX
11. VERIFY ALL SITE SIGNAGE LOCATIONS WITH ARCHITECT PRIOR TO INSTALLATION OF SITE SIGNAGE
12. CURBS ALONG FIRE LANE ARE PAINTED RED WITH 3" HIGH WHITE LETTERS STATING 'NO PARKING - FIRE LANE' AT 50' - 0" O.C.
13. FOR CONTROL JOINTS AT CONCRETE SEAT WALLS, REFER TO DETAIL H5 AS3.1

SITE PLAN LEGEND

- PROPOSED BUILDING
- (E) BUILDING NOT IN SCOPE
- **LANDSCAPE:** REFER TO LANDSCAPE DRAWINGS, TYP.
- (E) TURF
- **CAST-IN-PLACE CONCRETE:** STANDARD DUTY, REFER TO CIVIL DRAWINGS, TYP.
- (E) CONCRETE PAVING, TYP.
- **CAST-IN-PLACE CONCRETE:** HEAVY DUTY, REFER TO CIVIL DRAWINGS, TYP.
- (E) ASPHALT CONCRETE PAVING, TYP.
- **CAST-IN-PLACE CONCRETE:** STANDARD DUTY, ACCENT COLOR, REFER TO CIVIL DRAWINGS, TYP.
- X BUILDING DESIGNATION
- **CONCRETE ASPHALT PAVING:** HEAVY DUTY, REFER TO CIVIL DRAWINGS, TYP.
- **FIRE PROTECTION:** FIRE HYDRANT (FH) (NEW OR EXISTING), REFER TO FIRE PROTECTION DRAWNGS, TYPICAL
- UTILITY / PIPE, TYPICAL
- OVERHANG / COVERED AREA, TYPICAL
- GRADE BREAK, TYPICAL
- SLOPE — DIRECTION OF SURFACE SLOPE, TYPICAL

PBK
FRESNO, CA
559-448-8400
www.pbk.com

PARLIER HS STADIUM REPLACEMENT

603 3rd Street
Parlier, CA 93648

CLIENT PROJECT NO: 250093
DSA SUBMISSION
DSA APPL. NO.: 02-124002 DSA FILE NO.: 10-H12

PARLIER UNIFIED SCHOOL DISTRICT

TRUE

LICENSED ARCHITECT
MICHELE GARGANO
No. C-32593
RENEWAL DATE
MAR 31, 2027
STATE OF CALIFORNIA

CLIENT
PARLIER UNIFIED SCHOOL DISTRICT

DATE	PROJECT NUMBER
2026/02/09	250093

DRAWING HISTORY

No.	Description	Date
2	Addendum #2	2026-05-28

CHECKED BY: AR
DRAWN BY: RR

OVERALL SITE PLAN

AS1.1

Plot Stamp:
6/23/2026 9:33:19 AM

ENLARGED SITE PLAN
AS2.1
FOR BLUEBEAM LABELING/OCR:

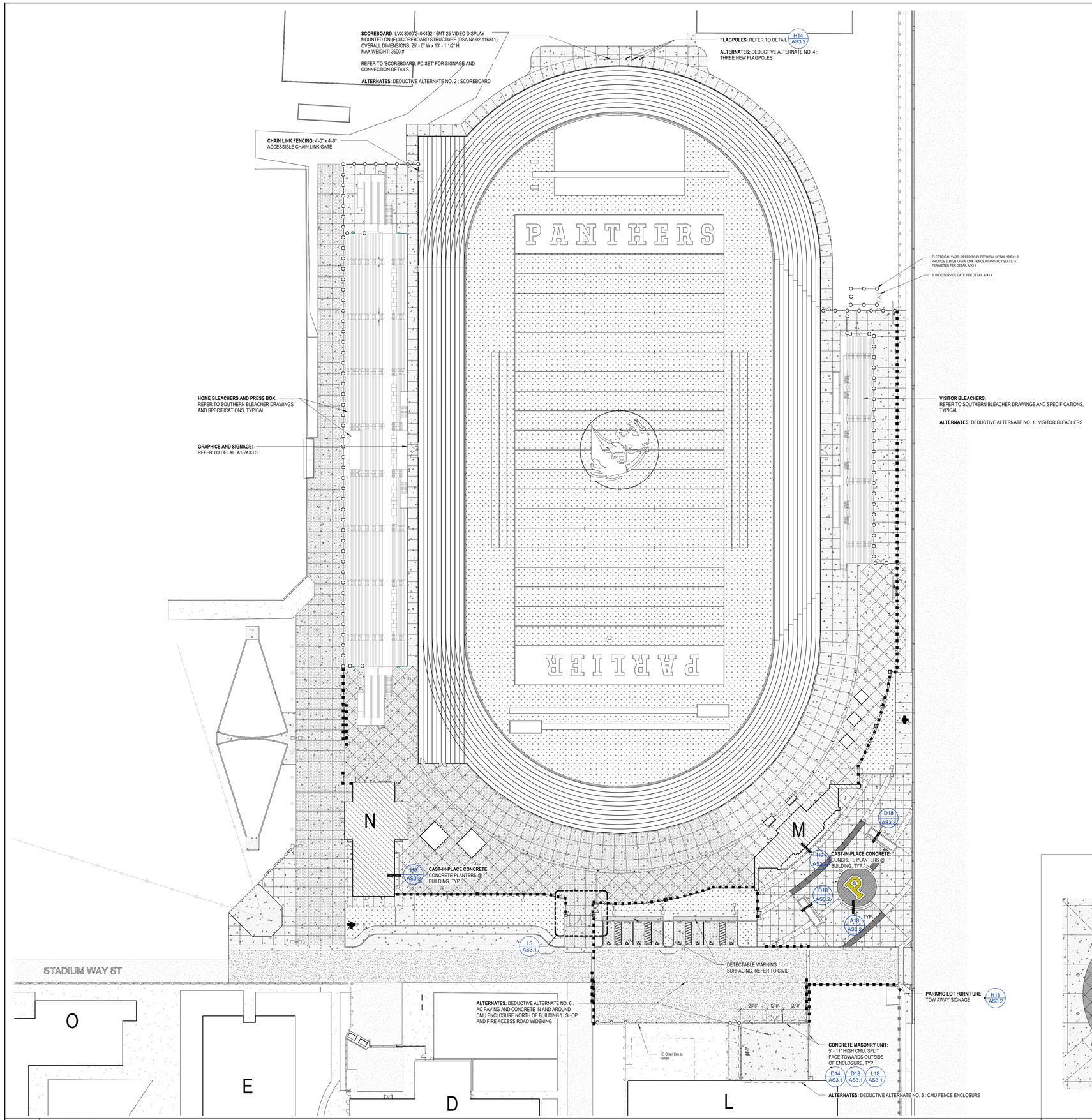

A18 ENLARGED SITE PLAN
1" = 30'-0"

GENERAL SITE PLAN NOTES

1. REFER TO CIVIL & LANDSCAPE PLANS FOR ANY ADDITIONAL SITE INFORMATION
2. PLUMBING: REFER TO PLUMBING DRAWINGS, TYP
3. NOT USED
4. ELECTRICAL: REFER TO ELECTRICAL DRAWINGS, TYP
5. NOT USED
6. PROVIDE POSITIVE DRAINAGE AWAY FROM ALL BUILDINGS OF 1% MINIMUM, 2% MAXIMUM AT ALL EXTERIOR PAVED PEDESTRIAN AREAS, INCLUDING BUT NOT LIMITED TO SIDEWALKS, PATIOS, STAIRS, PAVING, UNO
7. PROVIDE AND INSTALL POSITIVE DRAINAGE AWAY FROM ALL BUILDINGS OF 5% FOR A HORIZONTAL DISTANCE OF 10 FEET AT ALL EXTERIOR NON-PAVED AREAS UNO
8. VERIFY AND CONFIRM ALL JOINT LAYOUTS AT ALL CONCRETE SIDEWALKS WITH ARCHITECT PRIOR TO POURING OF CONCRETE
9. PROVIDE AND INSTALL CONCRETE SIDEWALK EXPANSION JOINTS AT AREAS NOT SPECIFICALLY INDICATED AT 50 FEET ON-CENTER MAX. UNO
10. PROVIDE AND INSTALL CONCRETE SIDEWALK CONTROL JOINTS AT AREAS NOT SPECIFICALLY INDICATED AT DISTANCES EQUIVALENT TO SIDEWALK WIDTH, BUT NOT TO EXCEED 10 FEET ON-CENTER MAX
11. VERIFY ALL SITE SIGNAGE LOCATIONS WITH ARCHITECT PRIOR TO INSTALLATION OF SITE SIGNAGE
12. CURBS ALONG FIRE LANE ARE PAINTED RED WITH 3" HIGH WHITE LETTERS STATING 'NO PARKING - FIRE LANE' AT 50' - 0" O.C.
13. FOR CONTROL JOINTS AT CONCRETE SEAT WALLS, REFER TO DETAIL H5 AS3.1

SITE PLAN LEGEND

- PROPOSED BUILDING
- (E) BUILDING NOT IN SCOPE
- **LANDSCAPE:** REFER TO LANDSCAPE DRAWINGS, TYP.
- (E) TURF
- **CAST-IN-PLACE CONCRETE:** STANDARD DUTY, REFER TO CIVIL DRAWINGS, TYP.
- (E) CONCRETE PAVING, TYP.
- **CAST-IN-PLACE CONCRETE:** HEAVY DUTY, REFER TO CIVIL DRAWINGS, TYP.
- (E) ASPHALT CONCRETE PAVING, TYP.
- **CAST-IN-PLACE CONCRETE:** STANDARD DUTY, ACCENT COLOR, DAVIS COLORS: GRAPHITE, REFER TO CIVIL DRAWINGS, TYP.
- X BUILDING DESIGNATION
- **CONCRETE ASPHALT PAVING:** HEAVY DUTY, REFER TO CIVIL DRAWINGS, TYP.
- **CAST-IN-PLACE CONCRETE:** CONCRETE SEAT WALLS, TYPICAL OF (13) A18 AS3.1 A14 AS3.1
- **FIRE PROTECTION:** FIRE HYDRANT (FH) (NEW OR EXISTING), REFER TO FIRE PROTECTION DRAWNGS, TYPICAL
- UTILITY / PIPE, TYPICAL
- OVERHANG / COVERED AREA, TYPICAL
- GRADE BREAK, TYPICAL
- SLOPE DIRECTION OF SURFACE SLOPE, TYPICAL
- EXISTING CHAIN LINKED FENCE, TYP.
- EXISTING ORNAMENTAL FENCE, TYP.
- **CHAIN LINKED FENCE:** REFER TO CIVIL DRAWINGS, TYP.
- **ORNAMENTAL FENCE:** REFER TO CIVIL DRAWINGS, TYP.

FLOOR FINISH LEGEND

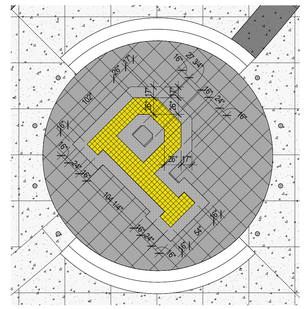

- **09 30 00 .TL-8** DALTILE - KEYSTONES MUSTARD - 1" X 1" MOSAIC
- **09 30 00.TL-9** CROSSVILE - BELIN BLACK IRON - 24" X 24"
- **09 30 00.TL-10** CROSSVILE - BELIN TOASTED WAFFLE - 2" X 2" SQUARE MOSAIC

A5 ENLARGED SITE PLAN
1/8" = 1'-0"

PBK
www.pbk.com
559-448-8400
FRESNO, CA

PARLIER HS STADIUM REPLACEMENT
603 3rd Street
Parlier, CA 93648

CLIENT PROJECT NO: 250093
DSA SUBMISSION
DSA APPL. NO. : 02-124002 DSA FILE NO. : 10-H12

PARLIER UNIFIED SCHOOL DISTRICT

TRUE

LICENSED ARCHITECT
MICHELE GARGANO
No. C-32500
RENEWAL DATE
MAR 31, 2027
STATE OF CALIFORNIA

CLIENT
PARLIER UNIFIED SCHOOL DISTRICT

DATE	PROJECT NUMBER
2026/02/09	250093

DRAWING HISTORY

No.	Description	Date
2	Addendum #2	2026-05-28
4	Addendum #4	2026-06-12

CHECKED BY: Checker
DRAWN BY: Author

ENLARGED SITE PLAN

AS2.1

Plot Stamp:
6/23/2026 9:33:45 AM

SITE DETAILS
AS3.1
FOR BLUEBEAM LABELING/DOCR:

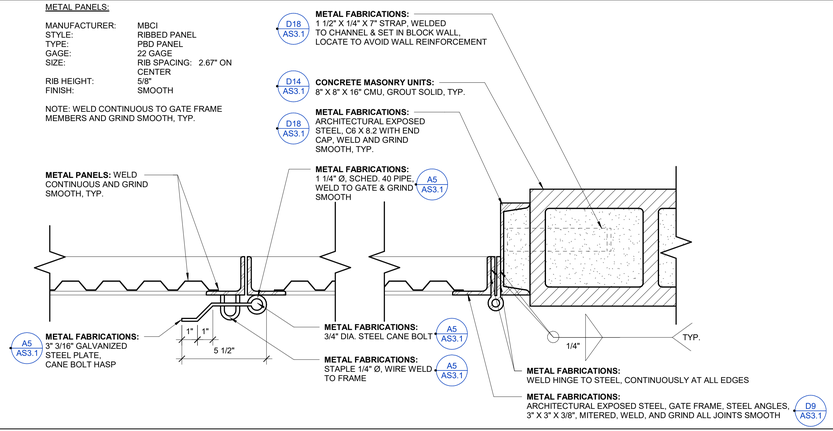

L18 STEEL AND FABRICATIONS, DOUBLE GATE PLAN VIEW
3" = 1'-0"

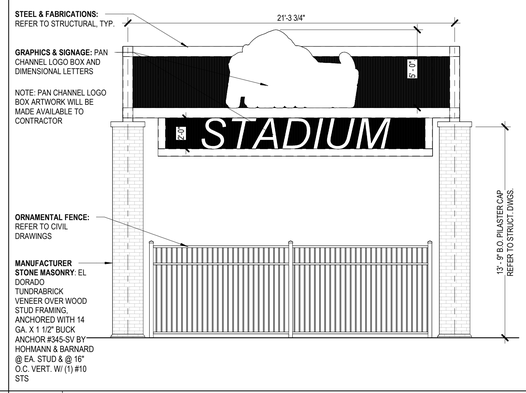

L9 GATE - NORTH ELEVATION
1/4" = 1'-0"

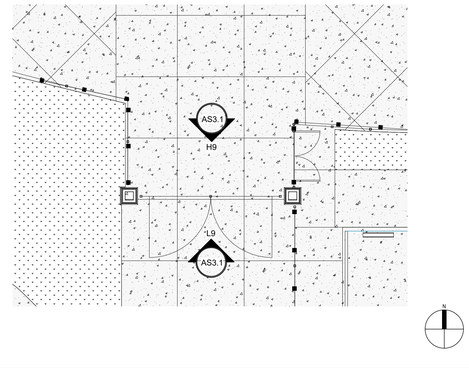

L5 ENLARGED SITE PLAN
1/8" = 1'-0"

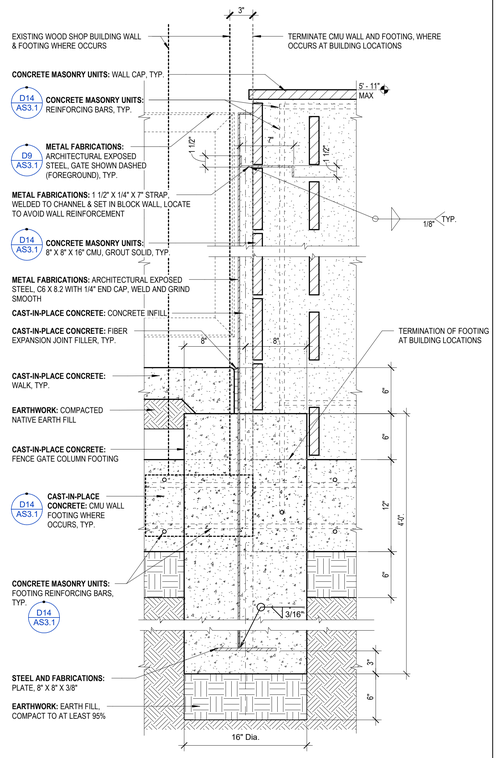

D18 STEEL AND FABRICATIONS: POST AND FOOTING
1 1/2" = 1'-0"

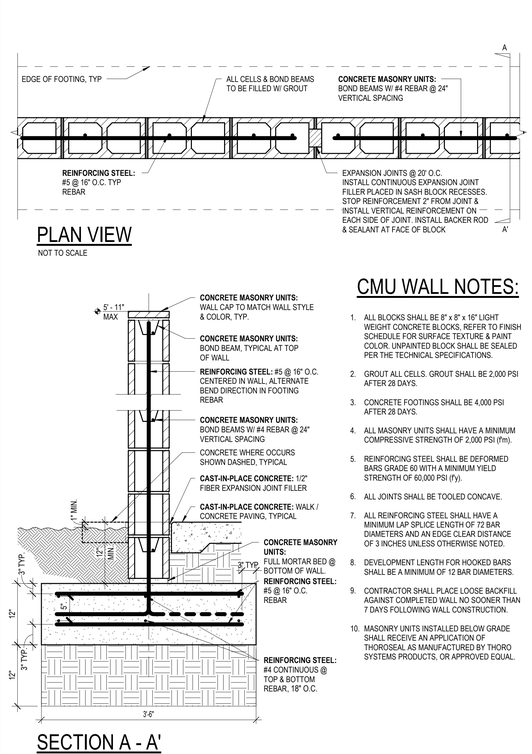

CMU WALL NOTES:

1. ALL BLOCKS SHALL BE 8" x 8" x 16" LIGHT WEIGHT CONCRETE BLOCKS, REFER TO FINISH SCHEDULE FOR SURFACE TEXTURE & PAINT COLOR. UNPAINTED BLOCK SHALL BE SEALED PER THE TECHNICAL SPECIFICATIONS.
2. GROUT ALL CELLS. GROUT SHALL BE 2,000 PSI AFTER 28 DAYS.
3. CONCRETE FOOTINGS SHALL BE 4,000 PSI AFTER 28 DAYS.
4. ALL MASONRY UNITS SHALL HAVE A MINIMUM COMPRESSIVE STRENGTH OF 2,000 PSI (f'm).
5. REINFORCING STEEL SHALL BE DEFORMED BARS GRADE 60 WITH A MINIMUM YIELD STRENGTH OF 60,000 PSI (fy).
6. ALL JOINTS SHALL BE TOOLED CONCAVE.
7. ALL REINFORCING STEEL SHALL HAVE A MINIMUM LAP SPLICE LENGTH OF 72 BAR DIAMETERS AND AN EDGE CLEAR DISTANCE OF 3 INCHES UNLESS OTHERWISE NOTED.
8. DEVELOPMENT LENGTH FOR HOOKED BARS SHALL BE A MINIMUM OF 12 BAR DIAMETERS.
9. CONTRACTOR SHALL PLACE LOOSE BACKFILL AGAINST COMPLETED WALL NO SOONER THAN 7 DAYS FOLLOWING WALL CONSTRUCTION.
10. MASONRY UNITS INSTALLED BELOW GRADE SHALL RECEIVE AN APPLICATION OF THOROSEAL AS MANUFACTURED BY THORO SYSTEMS PRODUCTS, OR APPROVED EQUAL.

D14 CONCRETE MASONRY UNIT: BLOCK WALL & FOOTINGS
1" = 1'-0"

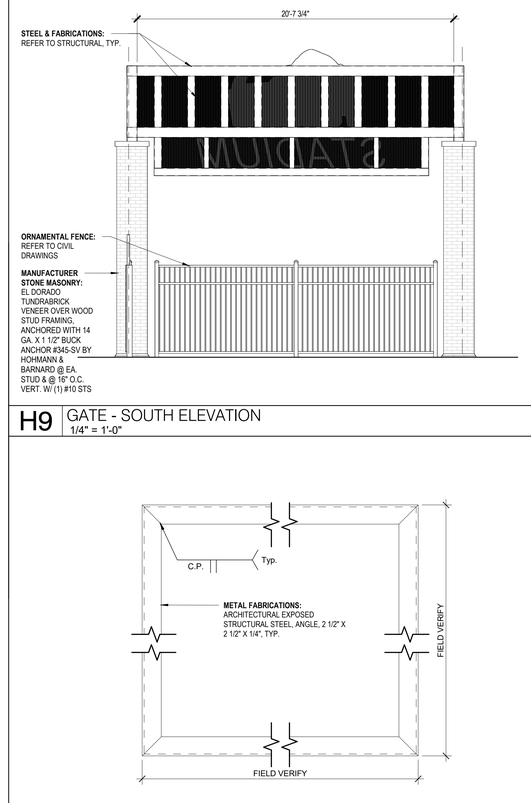

H9 GATE - SOUTH ELEVATION
1/4" = 1'-0"

D9 METAL FABRICATIONS: GATE FRAME ELEVATION
1 1/2" = 1'-0"

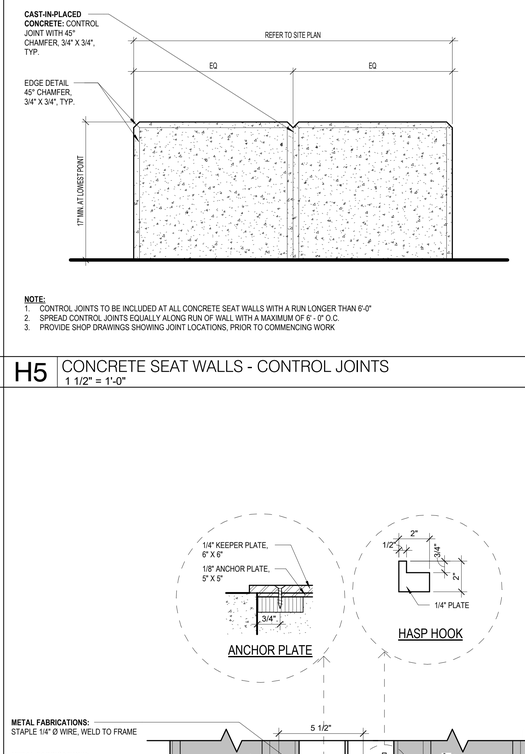

NOTE:
1. CONTROL JOINTS TO BE INCLUDED AT ALL CONCRETE SEAT WALLS WITH A RUN LONGER THAN 6'-0"
2. SPREAD CONTROL JOINTS EQUALLY ALONG RUN OF WALL WITH A MAXIMUM OF 6' -0" O.C.
3. PROVIDE SHOP DRAWINGS SHOWING JOINT LOCATIONS, PRIOR TO COMMENCING WORK

H5 CONCRETE SEAT WALLS - CONTROL JOINTS
1 1/2" = 1'-0"

A5 STEEL AND FABRICATIONS: LATCH AND CANE BOLT
3" = 1'-0"

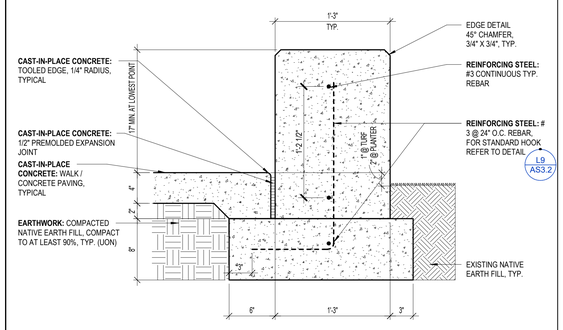

A18 CONCRETE SEAT WALL
1 1/2" = 1'-0"

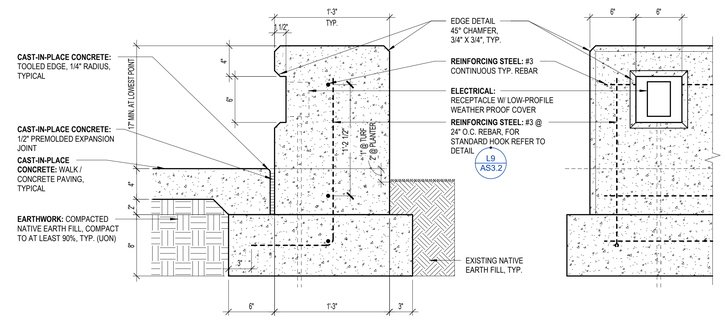

A14 CONCRETE SEAT WALL @ ELECTRICAL OUTLETS
1 1/2" = 1'-0"

PARLIER HS STADIUM REPLACEMENT

603 3rd Street
Parlier, CA 93648

CLIENT PROJECT NO: 250093
DSA SUBMISSION
DSA APPL. NO.: 02-124002 DSA FILE NO.: 10-H12

PBK
FRESNO, CA
559-448-8400
www.pbk.com

PARLIER UNIFIED SCHOOL DISTRICT

LICENSED ARCHITECT
MICHELE GARGANO
No. C-32550
Renewal Date: MAR 31, 2027
STATE OF CALIFORNIA

CLIENT
PARLIER UNIFIED SCHOOL DISTRICT
DATE 2026/02/09
PROJECT NUMBER 250093

DRAWING HISTORY

No.	Description	Date
1	Addendum #1	2026-05-29
5	DSA Comments_DWG V2	2026-06-25

CHECKED BY: Checker
DRAWN BY: Author

SITE DETAILS

AS3.1

Plot Stamp:
6/23/2026 9:34:34 AM

SITE DETAILS
AS3.2
FOR BLUEBEAM LABELING/OCR:

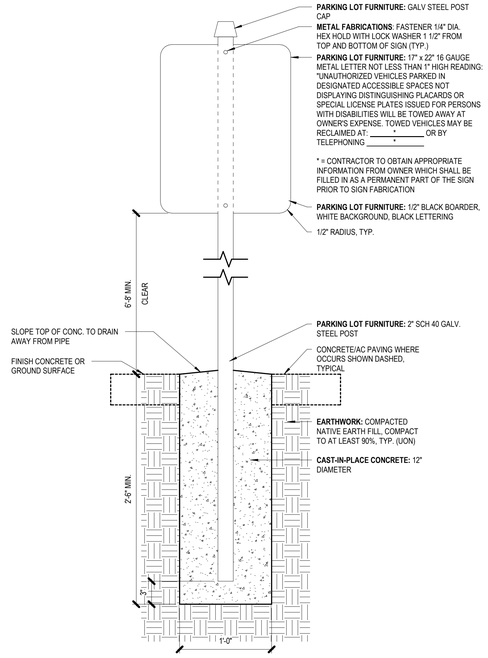

H18 TOW AWAY SIGNAGE
1 1/2" = 1'-0"

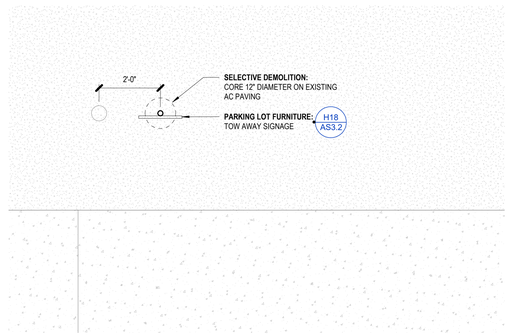

L14 TOW AWAY SIGNAGE LOCATION
1/2" = 1'-0"

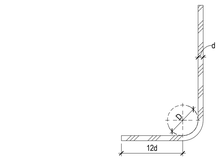

MINIMUM BEND DIAMETERS
D = 6d FOR #3 TO #8
D = 8d FOR #9 TO #11
D = 10d FOR #14 AND #18

L9 REBAR, STANDARD HOOK DETAIL
1/2" = 1'-0"

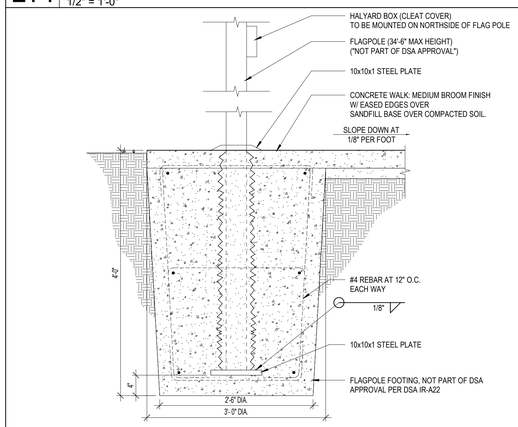

H14 FLAGPOLE FOOTING
1" = 1'-0"

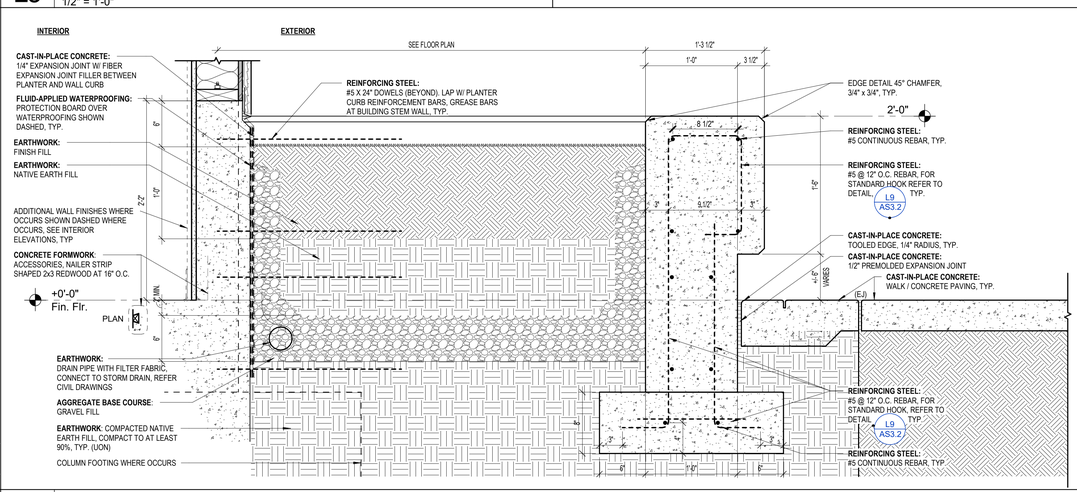

H9 CONCRETE SEAT WALL @ BUILDINGS
1 1/2" = 1'-0"

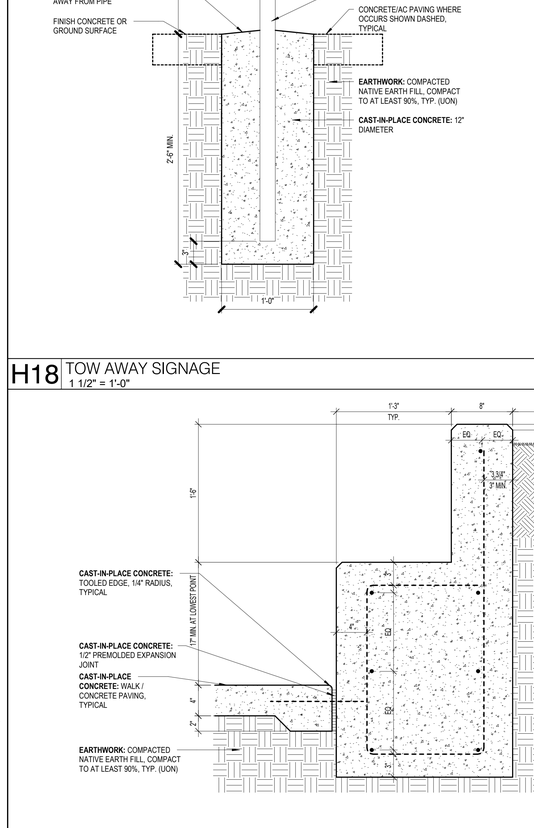

D18 CONCRETE SEAT WALL @ RAISED PLANTER
1 1/2" = 1'-0"

D14 BUILDING M - EXTERIOR PRIVACY WALL
3" = 1'-0"

A18 CONCRETE SEAT WALL @ CENTER CIRCLE
1 1/2" = 1'-0"

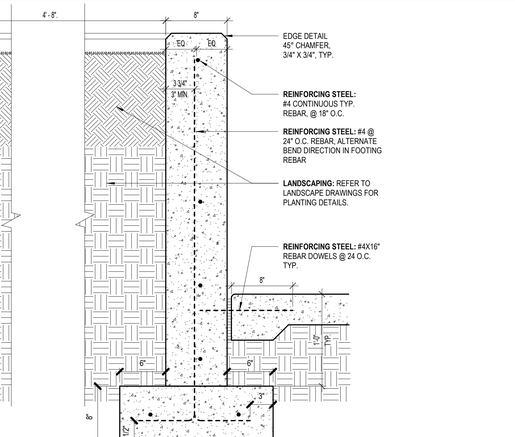

A14 BUILDING M - EXTERIOR PRIVACY WALL
3" = 1'-0"

Plot Stamp:
6/23/2026 9:34:40 AM

PBK
FRESNO, CA
559-448-8400
www.pbk.com

PARLIER HS STADIUM REPLACEMENT
603 3rd Street
Parlier, CA 93648

CLIENT PROJECT NO: 250093
DSA SUBMISSION
DSA APPL. NO.: 02-124002 DSA FILE NO.: 10-H12

PARLIER UNIFIED SCHOOL DISTRICT

LICENSED ARCHITECT
MICHELE GARGANO
No. C-32593
RENEWAL DATE
MAR 31, 2027
STATE OF CALIFORNIA

CLIENT
PARLIER UNIFIED SCHOOL DISTRICT

DATE	PROJECT NUMBER
2026/02/09	250093

DRAWING HISTORY

No.	Description	Date
5	DSA Comments_DWG V2	2026-06-25

CHECKED BY: Checker
DRAWN BY: Author

SITE DETAILS

AS3.2

BUILDING M - FLOOR PLAN
AM1.1
FOR BLUEBEAM LABELING/OCR:

FLOOR PLAN LEGEND

SYMBOLS

STUD WALL: STUDS AND INTERIOR WALL MATERIALS CONTINUOUS FROM FLOOR TO UNDERSIDE OF FLOOR OR ROOF DECK. STUDS AT 16" O.C. UNLESS OTHERWISE NOTED. INTERIOR WALL MATERIAL SHALL INCLUDE BATT INSULATION, SOUND DEADENING BOARD, PLYWOOD SHEATHING, GYPSUM BOARD, AND CEMENT PLASTER/ CERAMIC TILE SETTING BED WHERE OCCURS. REFER TO INTERIOR ELEVATIONS AND INTERIOR FINISH SCHEDULES FOR ADDITIONAL WALL FINISHES.

0 — REFERENCE GRID

Room name 101 — ROOM DESIGNATION

BUILDING LAYOUT POINT FROM FACE OF EXTERIOR CONCRETE CURB, REFER TO CIVIL DRAWINGS

NOTES

1. ALL DIMENSIONS ARE TO CENTER OF STUD OR CENTER OF GRID, UNO
2. ALL ELEVATION DIMENSIONS ARE ABOVE FINISH FLOOR AT EACH FLOOR LEVEL, UNO
3. DIMENSIONS NOTED AS "+/-" ARE NOMINAL
4. FLOOR DRAINS (FD) AND FLOOR SINKS (FS) SHALL BE SET -3/4" AND A MIN. OF 3'-0" FROM NEAREST WALL WITH A MAXIMUM SLOPE OF FLOOR TO DRAIN NOT TO EXCEED 1:48, UNO
5. FIRE RESISTIVE ASSEMBLIES:
   A. ALL THROUGH PENETRATIONS AND WALL MEMBRANE PENETRATIONS THROUGH WALLS OF FIRE RESISTIVE CONSTRUCTION SHALL BE PROTECTED IN ACCORDANCE WITH THEIR FIRE RESISTIVE RATINGS
   B. ALL WALLS OF FIRE AND/OR SMOKE RESISTIVE CONSTRUCTION SHALL BE PERMANENTLY IDENTIFIED WITH SIGNS OR STENCILING IN LETTERING NOT LESS THAN 3 INCHES (76 MM) IN. HEIGHT WITH A MINIMUM 3/8 INCH (9.5 MM) STROKE IN A CONTRASTING COLOR INCORPORATING THE FOLLOWING WORDING: FIRE AND/OR SMOKE BARRIER "#" HOUR RATED, PROTECT ALL OPENINGS, SIGNS OR STENCILING HALL BE LOCATED ABOVE CEILINGS ON BOTH SIDES OF THE WALL, COATED 15'-0" FROM ENDS OF WALL AND AT INTERVALS NOT TO EXCEED 30'-0" HORIZONTALLY ALONG THE WALL OR PARTITION. NOTE: "#" INDICATES HE HOURLY RATING OF THE WALL OR PARTITION
6. FOR MINIMUM REQUIRED CLEARANCES, GRAB BAR SIZES AND STANDARDS SEE DETAIL D18/AX4.3 TYPICAL ACCESSIBILITY STANDARDS
7. FOR MAXIMUM RESTROOM ACCESSORY HEIGHTS AND PROJECTIONS SEE DETAIL D18/AX4.3 TYPICAL ACCESSIBILITY STANDARDS (TOILET ROOM ACCESSORIES)

GENERAL ARCH PLAN NOTES

1. ALIGN FINISHED FACE OF WALLS WHERE WALL PARTITIONS OF DIFFERING THICKNESS ABUT AND OR ADJOIN IN THE SAME PLANE.
2. PROVIDE AND INSTALL CONTINUOUS REVEAL TRIM AT JOINT WHERE GYPSUM BOARD WALL PARTITIONS ABUT AND OR ADJOIN MASONRY WALL PARTITIONS IN THE SAME PLANE.
3. ALL DOOR THRESHOLDS AT ALL EXTERIOR DOORS SHALL BE SET IN FULL BED OF SEALANT.
4. COORDINATE ALL ROOF DRAIN LEADER LOCATIONS WITH FLOOR PLAN PRIOR TO FLOOR SLAB CONSTRUCTION.
5. PROVIDE AND INSTALL SELF-LEVELING UNDERLAYMENT WHERE UNEVEN FLOOR SLAB EXISTS PRIOR TO INSTALLATION OF FLOOR FINISHES.
6. COORDINATE HOUSEKEEPING PAD LOCATIONS AND DIMENSIONS WITH EQUIPMENT TO BE INSTALLED.
7. ALL REQUIRED ACCESSIBLE CLEARANCES FOR ALL ITEMS, INCLUDING BUT NOT LIMITED TO ALL COUNTER TOPS, ALL PLUMBING FIXTURES, ALL DRINKING FOUNTAINS, ALL ELECTRIC WATER COOLERS, ALL LAVATORIES, ALL URINALS, ALL TOILETS SHALL BE STRICTLY ENFORCED.
8. APPLY BITUMINOUS COATING TO ALL CONCEALED STRUCTURAL STEEL MEMBERS AT ALL EXTERIOR CANOPY LOCATIONS.
9. REFER TO OTHER DISCIPLINE DOCUMENTS FOR ADDITIONAL SCOPE OF WORK.

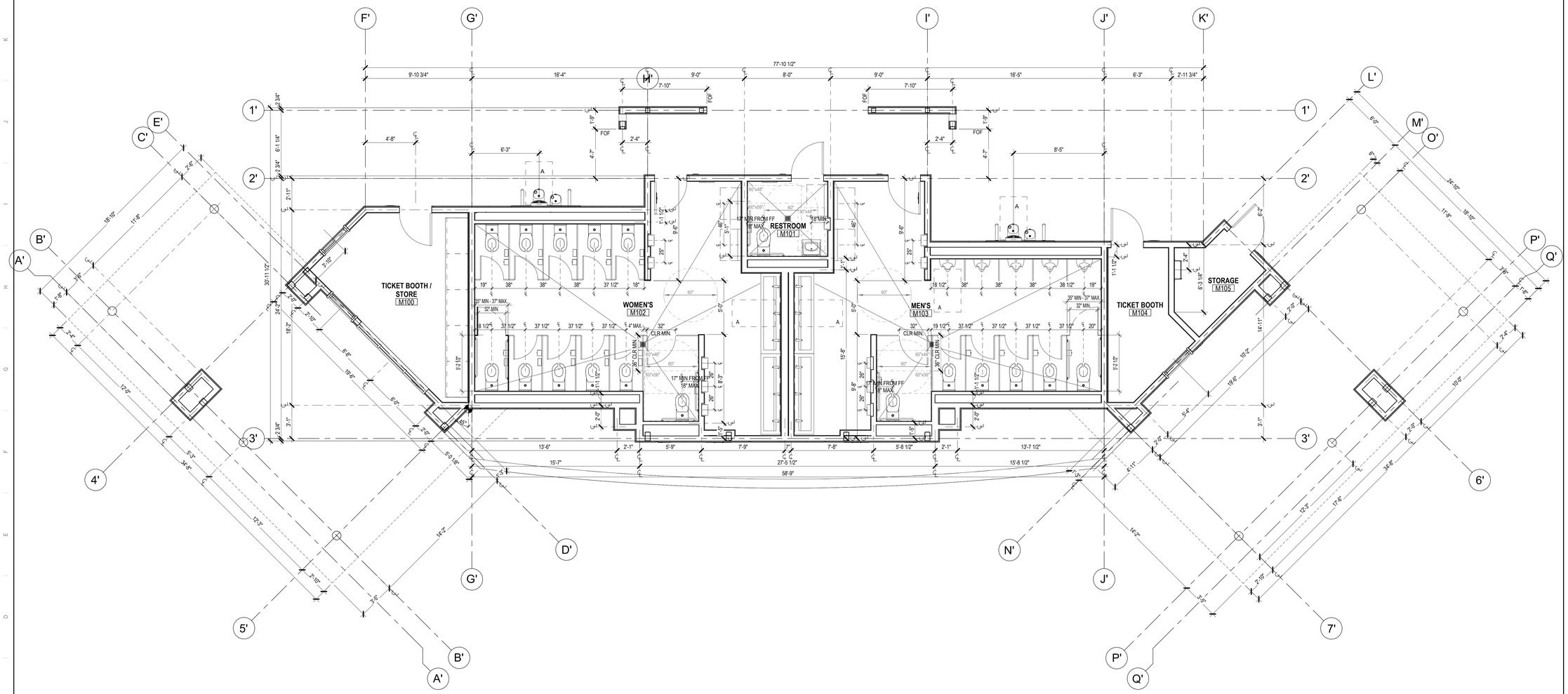

A18 FLOOR PLAN - BUIDING M
1/4" = 1'-0"

TRUE NORTH / PLAN NORTH

Plot Stamp:
6/23/2026 9:33:46 AM

PBK
www.pbk.com
559-448-8400
FRESNO, CA

PARLIER HS STADIUM REPLACEMENT

603 3rd Street
Parlier, CA 93648

CLIENT PROJECT NO: 250093
DSA SUBMISSION
DSA APPL. NO.: 02-124002 DSA FILE NO.: 10-H12

PARLIER UNIFIED SCHOOL DISTRICT

LICENSED ARCHITECT
MICHELE GARGANO
No. C-32560
RENEWAL DATE
JUNE 31, 2027
STATE OF CALIFORNIA

CLIENT
PARLIER UNIFIED SCHOOL DISTRICT

DATE	PROJECT NUMBER
2026/02/09	250093

DRAWING HISTORY

No.	Description	Date
5	DSA Comments, DWG V2	2026-06-25

CHECKED BY: Checker
DRAWN BY: Author

BUILDING M - FLOOR PLAN

AM1.1

BUILDING M - ANNOTATED FLOOR PLAN
AM1.2
FOR BLUEBEAM LABELING/OCR:

FLOOR PLAN LEGEND

SYMBOLS

STUD WALL, STUDS AND INTERIOR WALL MATERIALS CONTINUOUS FROM FLOOR TO UNDERSIDE OF FLOOR OR ROOF DECK. STUDS AT 16" O.C. UNLESS OTHERWISE NOTED. INTERIOR WALL MATERIAL SHALL INCLUDE BATT INSULATION, SOUND DEADENING BOARD, PLYWOOD SHEATHING, GYPSUM BOARD, AND CEMENT PLASTER/ CERAMIC TILE SETTING BED WHERE OCCURS. REFER TO INTERIOR ELEVATIONS AND INTERIOR FINISH SCHEDULES FOR ADDITIONAL WALL FINISHES.

0 — REFERENCE GRID

101A — DOOR OPENING GROUP NO. REFER TO DOOR OPENING SCHEDULES

101a — WINDOW OPENING GROUP NO. REFER TO WINDOW OPENING SCHEDULES

Eq Mark — EQUIPMENT ITEM NO. REFER TO EQUIPMENT SCHEDULE

sim. (*) — OMIT CEMENT PLASTER INSIDE CHASE WALL

Room name 101 — ROOM DESIGNATION

X — WALL ASSEMBLY SYMBOLS. REFER TO SHEET AX2.1

REFERENCE POINT

VINYL CORNER GUARD TYP. (D9 / AX4.2)

STAINLESS STEEL CORNER GUARD TYP. (D9 / AX4.2)

NOTES

1. ALL EXTERIOR WALLS SHALL BE WALL ASSEMBLY TYPE A-6 UNO
2. ALL INTERIOR WALLS SHALL BE WALL ASSEMBLY TYPE C-6 UNO
3. FLOOR DRAINS (FD) AND FLOOR SINKS (FS) SHALL BE SET -3/4" AND A MIN. OF 3'-0" FROM NEAREST WALL WITH A MAXIMUM SLOPE OF FLOOR TO DRAIN NOT TO EXCEED 1:48, UNO
4. IDENTIFYING DEVICES, FOR ROOM SIGNAGE REFER TO SHEET CA3.1 AND SPECIFICATIONS
5. FIRE RESISTIVE ASSEMBLIES:
   A. ALL THROUGH PENETRATIONS AND WALL MEMBRANE PENETRATIONS THROUGH WALLS OF FIRE RESISTIVE CONSTRUCTION SHALL BE PROTECTED IN ACCORDANCE WITH THEIR FIRE RESISTIVE RATINGS
   B. ALL WALLS OF FIRE AND/OR SMOKE RESISTIVE CONSTRUCTION SHALL BE PERMANENTLY IDENTIFIED WITH SIGNS OR STENCILING IN LETTERING NOT LESS THAN 3 INCHES (76 MM) IN. HEIGHT WITH A MINIMUM 3/8 INCH (9.5 MM) STROKE IN A CONTRASTING COLOR INCORPORATING THE FOLLOWING WORDING: FIRE AND/OR SMOKE BARRIER "#" HOUR RATED, PROTECT ALL OPENINGS, SIGNS OR STENCILING HALL BE LOCATED ABOVE CEILINGS ON BOTH SIDES OF THE WALL, COATED 15'-0" FROM ENDS OF WALL AND AT INTERVALS NOT TO EXCEED 30'-0" HORIZONTALLY ALONG THE WALL OR PARTITION. NOTE: "#" INDICATES HE HOURLY RATING OF THE WALL OR PARTITION
6. CAST-IN-PLACE CONCRETE, EXTERIOR 6" HIGH RAISED CONCRETE CURB PER DETAIL A5 / AX3.1 UNO
7. CAST-IN-PLACE CONCRETE, EXTERIOR 6" HIGH RAISED CONCRETE CURB AT ROOMS WITH INTERIOR TILE BASE CONDITION PER DETAILS H5 / AX3.1
8. CAST-IN-PLACE CONCRETE, INTERIOR SILL PLACE CONDITION SEE SHEET AX4.1
9. SHEET METAL, METAL ACCESSORIES, PROVIDE STAINLESS-STEEL CORNER GUARD (FULL HEIGHT) AT ALL OUTSIDE CORNER CONDITIONS (TYPICAL OF 4) OF ALL WALLS RECEIVING STAINLESS-STEEL PANELING, REFER TO DETAIL D9 / AX4.2
10. NON-BEARING, NON RATED WALL TO ROOF JOIST CONDITIONS (TYP. AT ALL INTERIOR WALLS W/ SOUND BLANKET INSULATION), REFER TO DETAIL L18 / AX2.1
11. FOR ELEVATIONS THAT ARE NOT ILLUSTRATED, MATCH ADJACENT ELEVATION FINISHES AND REFER TO INTERIOR FINISH SCHEDULE.

GENERAL ARCH PLAN NOTES

1. ALIGN FINISHED FACE OF WALLS WHERE WALL PARTITIONS OF DIFFERING THICKNESS ABUT AND OR ADJOIN IN THE SAME PLANE.
2. PROVIDE AND INSTALL CONTINUOUS REVEAL TRIM AT JOINT WHERE GYPSUM BOARD WALL PARTITIONS ABUT AND OR ADJOIN MASONRY WALL PARTITIONS IN THE SAME PLANE.
3. ALL DOOR THRESHOLDS AT ALL EXTERIOR DOORS SHALL BE SET IN FULL BED OF SEALANT.
4. COORDINATE ALL ROOF DRAIN LEADER LOCATIONS WITH FLOOR PLAN PRIOR TO FLOOR SLAB CONSTRUCTION.
5. PROVIDE AND INSTALL SELF-LEVELING UNDERLAYMENT WHERE UNEVEN FLOOR SLAB EXISTS PRIOR TO INSTALLATION OF FLOOR FINISHES.
6. COORDINATE HOUSEKEEPING PAD LOCATIONS AND DIMENSIONS WITH EQUIPMENT TO BE INSTALLED.
7. ALL REQUIRED ACCESSIBLE CLEARANCES FOR ALL ITEMS, INCLUDING BUT NOT LIMITED TO ALL COUNTER TOPS, ALL PLUMBING FIXTURES, ALL DRINKING FOUNTAINS, ALL ELECTRIC WATER COOLERS, ALL LAVATORIES, ALL URINALS, ALL TOILETS SHALL BE STRICTLY ENFORCED.
8. APPLY BITUMINOUS COATING TO ALL CONCEALED STRUCTURAL STEEL MEMBERS AT ALL EXTERIOR CANOPY LOCATIONS.
9. REFER TO OTHER DISCIPLINE DOCUMENTS FOR ADDITIONAL SCOPE OF WORK.

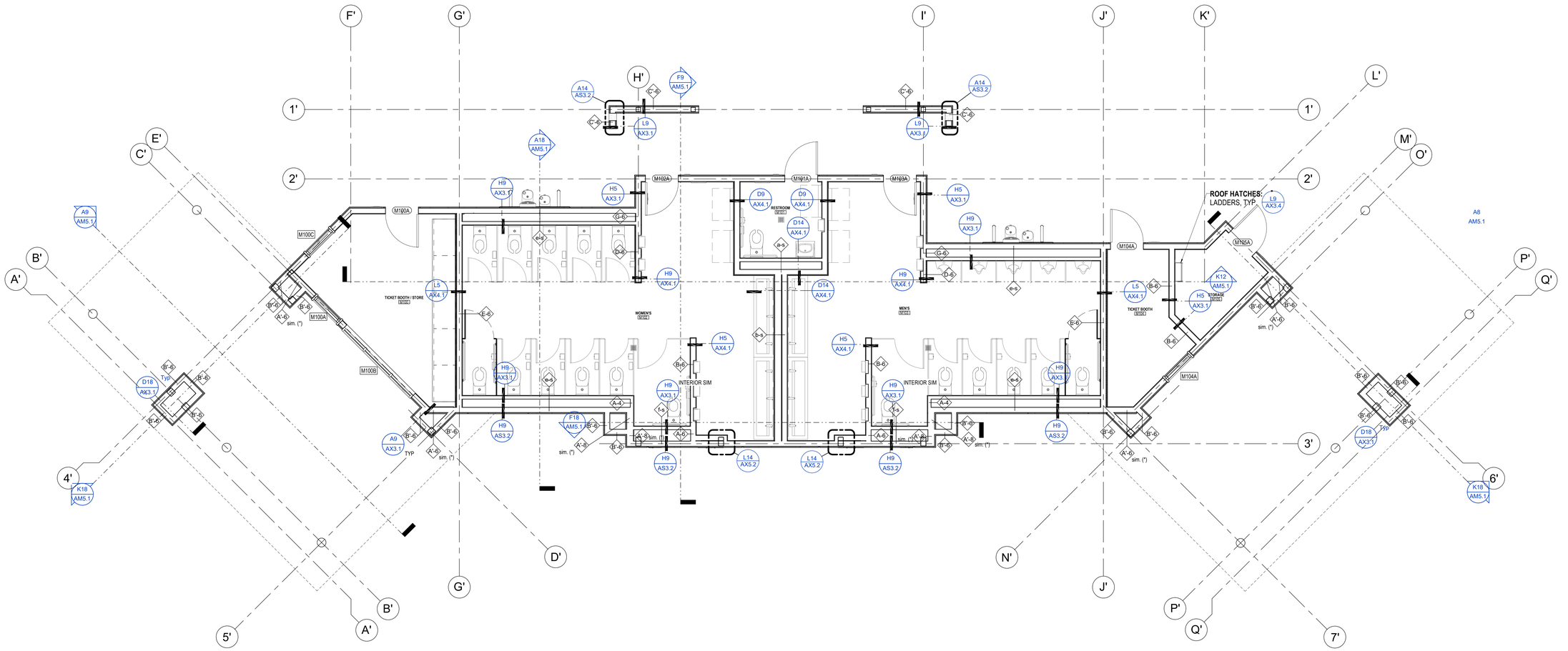

A18 ANNOTATED FLOOR PLAN - BUILDING M
1/4" = 1'-0"

TRUE NORTH / PLAN NORTH

PBK
www.pbk.com
559-448-8400
FRESNO, CA

PARLIER HS STADIUM REPLACEMENT

603 3rd Street
Parlier, CA 93648

CLIENT PROJECT NO: 250093
DSA SUBMISSION
DSA APPL. NO.: 02-124002 DSA FILE NO.: 10-H12

PARLIER UNIFIED SCHOOL DISTRICT

LICENSED ARCHITECT
MICHELE GARGANO
No. C-32550
RENEWAL DATE
MAR 31, 2027
STATE OF CALIFORNIA

CLIENT	
PARLIER UNIFIED SCHOOL DISTRICT	
DATE	PROJECT NUMBER
2026/02/09	250093

DRAWING HISTORY

No.	Description	Date
5	DSA Comments_DWG V2	2026-06-25

CHECKED BY: Checker
DRAWN BY: Author

BUILDING M - ANNOTATED FLOOR PLAN

AM1.2

Plot Stamp:
6/23/2026 9:33:47 AM

BUILDING M - REFLECTED CEILING PLAN
AM2.1
FOR BLUEBEAM LABELING/OCR:

KEYNOTE LEGEND

NUMBER	DESCRIPTION

CEILING MATERIALS LEGEND

09 51 00
ACOUSTICAL CEILING PANEL,
TYPE IV & V - 2'X4' SUSPENDED ACOUSTICAL CEILING TILES & GRID, REFER TO DETAIL H18 / AX4.2

09 29 00
GYPSUM CEILING BOARD,
5/8" LEVEL 1, NON-RATED

07 42 43 TYPE MCM-1
METAL COMPOSITE WALL & SOFFIT PANEL,
REFER TO SHEET AX3.5 FOR DETAILS

CEILING FIXTURE LEGEND

- CEILING ACCESS PANEL
- **26 51 00** 2' x 2' RECESSED LIGHT FIXTURE *RE: ELECTRICAL*
- **26 51 00** 2' x 4' RECESSED LIGHT FIXTURE *RE: ELECTRICAL*
- **26 51 00** 1' x 4' RECESSED LIGHT FIXTURE *RE: ELECTRICAL*
- **26 51 00** 4.5" RECESSED CAN LIGHT *RE: ELECTRICAL*
- **26 51 00** 4.5" RECESSED COMMERCIAL LIGHT *RE: ELECTRICAL*
- SUPPLY AIR CEILING DIFFUSER *RE: MECHANICAL*
- RETURN AIR GRILLE / REGISTER *RE: MECHANICAL*
- EXHAUST GRILLE / REGISTER *RE: MECHANICAL*

GENERAL CEILING PLAN NOTES

1. ALL CEILING HEIGHTS ARE FROM THE MAIN FLOOR LEVEL WITHIN THE ROOM AND OR SPACE, AND ARE NOT FROM AN ELEVATED FLOOR LEVEL, AND ARE NOT FROM A RECESSED FLOOR LEVEL.
2. NO FIRE SPRINKLER HEADS ARE SHOWN ON ARCHITECTURAL CEILING PLANS. ALL SPRINKLER HEADS SHALL BE CENTERED WITHIN CEILING TILES U.N.O.
3. ONLY CEILING MOUNTED FIXTURES AND EQUIPMENT IS SHOWN ON ARCHITECTURAL CEILING PLANS. REFER TO INTERIOR ELEVATIONS FOR WALL MOUNTED FIXTURES. REFER TO MEPT DOCUMENTS FOR ADDITIONAL INFORMATION CONCERNING CEILING MOUNTED FIXTURES AND OR WALL MOUNTED FIXTURES.
4. CEILING MOUNTED LIGHT FIXTURES ARE SHOWN FOR LOCATION PURPOSES ONLY. COORDINATE WITH ELECTRICAL DOCUMENTS FOR LIGHT FIXTURE DESIGNATIONS.
5. VERIFY LOCATIONS OF ALL CEILING ACCESS PANELS WITH MEPT DOCUMENTS. COORDINATE LOCATIONS OF CEILING ACCESS PANELS WITH ARCHITECT PRIOR TO INSTALLATION. CEILING ACCESS PANEL FIRE RATINGS SHALL MATCH CEILING ASSEMBLY FIRE RATINGS.
6. REFER TO WALL SECTIONS FOR WALL-CEILING INTERFACE.
7. ALL EXTERIOR WALLS SHALL EXTEND TO DECK AND BE SEALED, INCLUDING WALLS ADJACENT TO SOFFITS AND ABOVE DOORS AND WINDOWS. THESE EXTERIOR WALLS SHALL BE DAMPROOFED AND INSULATED.
8. COORDINATE LOCATION OF ALL LIGHT FIXTURES, EXIT SIGNS, GRILLES, AND SPEAKERS WITH MEPT DRAWINGS.
9. PAINT ALL DUCTWORK, CONDUITS, PIPING, GYP BOARD CEILING FURRDOWNS, STRUCTURAL BEAMS, STRUCTURAL JOISTS, STRUCTURAL COLUMNS, METAL ROOF DECK, AND OTHER STRUCTURAL MEMBERS - BOTH EXTERIOR AND INTERIOR - WHERE EXPOSED TO VIEW. COORDINATE PAINT COLOR(S) WITH THE ARCHITECT.
10. LIGHTING FIXTURES TO BE CENTERED AND SPACED EQUALLY UNLESS NOTED OTHERWISE.
11. CONDUIT AND / OR RACEWAY MOUNTED TO STRUCTURAL MEMBERS IN EXPOSED-TO-STRUCTURE SPACES SHALL BE INSTALLED TIGHT TO DECK AND PARALLEL OR PERPENDICULAR TO BUILDING LINES. DO NOT INSTALL CONDUIT, RACEWAY, OR WIRING PERPENDICULAR TO JOISTS NEAR BOTTOM CHORD LEVEL.
12. REFER TO SHEET AM1.1 FOR ADDITIONAL SYMBOLS NOT SHOWN.
13. ALL SOFFIT DIMENSIONS ARE OUTSIDE FACE OF FINISH TO OUTSIDE FACE OF FINISH U.N.O.
14. ALL EXPOSED METAL DECK AND STRUCTURAL STEEL IS TO COMPLY WITH "ARCHITECTURALLY" EXPOSED STRUCTURAL STEEL FRAMING", REFER TO SPECIFICATION.

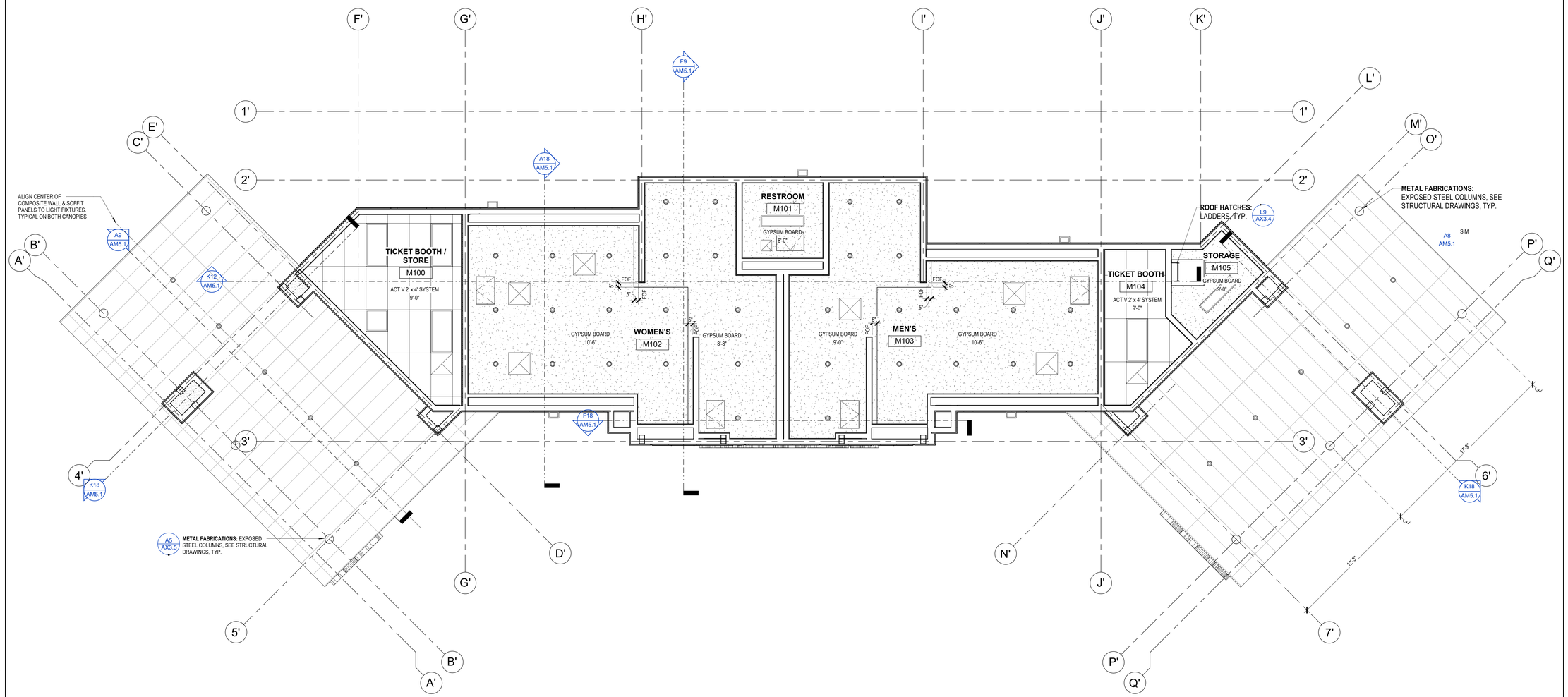

A18 REFLECTED CEILING PLAN - BUILDING M
1/4" = 1'-0"

Plot Stamp:
6/23/2026 9:33:49 AM

PBK
www.pbk.com
559-448-8400
FRESNO, CA

PARLIER HS STADIUM REPLACEMENT

CLIENT PROJECT NO: 250093
DSA SUBMISSION
DSA APPL. NO.: 02-124002 DSA FILE NO.: 10-H12

PARLIER UNIFIED SCHOOL DISTRICT
603 3rd Street
Parlier, CA 93648

LICENSED ARCHITECT
MICHELE GARGANO
No. C-32593
RENEWAL DATE
JUNE 31, 2027
STATE OF CALIFORNIA

CLIENT
PARLIER UNIFIED SCHOOL DISTRICT

DATE	PROJECT NUMBER
2026/02/09	250093

DRAWING HISTORY

No.	Description	Date

CHECKED BY: Checker
DRAWN BY: Author

BUILDING M - REFLECTED CEILING PLAN

AM2.1

BUILDING M - ROOF PLAN
AM3.1
FOR BLUEBEAM LABELING/OCR:

ROOF LEGEND

POLYVINYL-CHLORIDE ROOFING: PVC ROOFING SYSTEM, TYP.

FORMED METAL ROOF PANELS: GUTTER, EXTENT OF GUTTER.

MODIFIED BITUMINOUS MEMBRANE ROOFING: BUR SYSTEM, TYP.

PVC THERMOPLASTIC MEMBRANE ROOFING: 39" x 32" WALKWAY PROTECTION.

ROOF NOTES & SYMBOLS

SYMBOLS

PLUMBING: ROOF DRAIN AND OVERFLOW, TYP. (D9 / AX3.4)

MECHANICAL: EXHAUST FAN

Slope (DN) — DIRECTION OF SLOPE

C.S. — CRICKET SLOP SHALL BE 2% MIN.

PLUMBING: CANOPY ROOF DRAIN, TYP. PROVIDE FRAMING/BLOCKING SIMILAR TO DETAIL D9 / AX3.4

PLUMBING: CANOPY OVERFLOW DRAIN, TYP. OVERFLOW DRAIN TO EXTEND 1" BEYOND BOTTOM OF SOFFIT FINISH, MAX.

NOTES

1. REFER TO PLUMBING, MECHANICAL, TELECOMMUNICATIONS, FOOD SERVICE, AND ELECTRICAL FOR ALL ROOF PENETRATIONS AND ROOF MOUNTED EQUIPMENT.
2. ROOF SLOPE AND CRICKETS SHALL BE CONSTRUCTED WITH TAPERED INSULATION TO ACHIEVE SLOPE AS REQUIRED.
3. SHEET METAL, COUNTERFLASHING BOOTS SHALL BE INSTALLED AT INTERSECTING PARAPETS THAT HAVE DIFFERENT PARAPET HEIGHTS. FOR CONDITIONS REQUIRING SUCH BOOTS, REFER TO DETAIL L14 / AX3.3 AND H18 / AX3.3
4. FOR TALL PIPE/CONDUIT PENETRATION FLASHING, REFER TO DETAIL D5 / AX3.3
5. FOR PLUMBING VENTS PENETRATION FLASHING, REFER TO PLUMBING DWGS AND REFER TO REFER TO DETAIL H5 / AX3.3
6. FOR HVAC UNITS, REFER TO MECHANICAL DWGS AND DETAIL A5 / AX3.3
7. FOR ODU'S AND TRANSFORMERS ON ROOF, REFER TO ELECTRICAL AND MECHANICAL DWGS AND DETAIL A18 / AX3.3

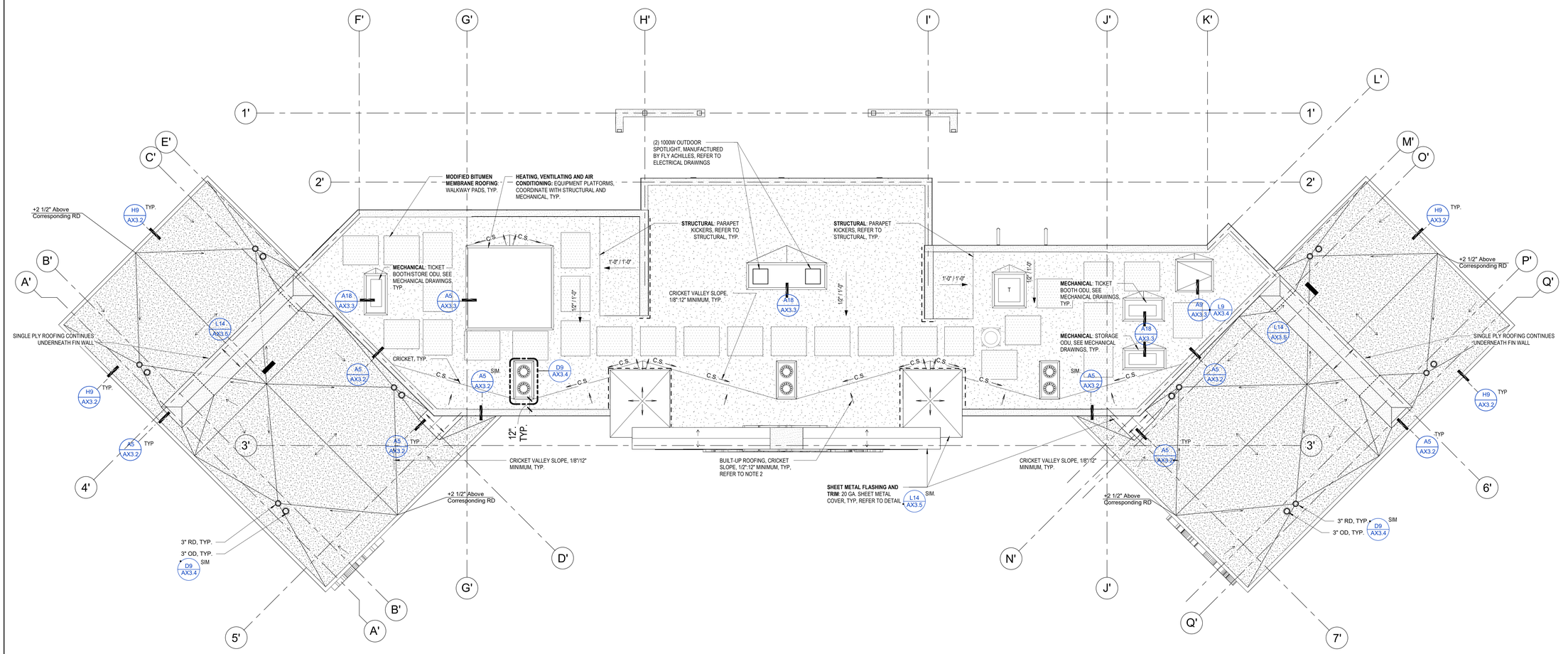

A18 ROOF PLAN - BUILDING M
1/4" = 1'-0"

TRUE NORTH / PLAN NORTH

Plot Stamp:
6/23/2026 9:33:50 AM

PBK
www.pbk.com
559-448-8400
FRESNO, CA

PARLIER HS STADIUM REPLACEMENT

603 3rd Street
Parlier, CA 93648

CLIENT PROJECT NO: 250093
DSA SUBMISSION
DSA APPL. NO.: 02-124002 DSA FILE NO.: 10-H12

PARLIER UNIFIED SCHOOL DISTRICT

LICENSED ARCHITECT
MICHELE GARGANO
No. C-32550
RENEWAL DATE
MAR 31, 2027
STATE OF CALIFORNIA

CLIENT
PARLIER UNIFIED SCHOOL DISTRICT

DATE	PROJECT NUMBER
2026/02/09	250093

DRAWING HISTORY

No.	Description	Date
4	Addendum #4	2026-06-12
5	DSA Comments_DWG V2	2026-06-25

CHECKED BY: Checker
DRAWN BY: Author

BUILDING M - ROOF PLAN

AM3.1

BUILDING M - EXTERIOR ELEVATIONS
AM4.1
FOR BLUEBEAM LABELING/DOCR:

EXTERIOR MATERIALS LEGEND

09 24 00 TYPE P-1 U.N.O.
CEMENT PLASTER WALL

03 30 00
CAST IN PLACE CONCRETE WALL

07 42 43 TYPE MCM-1
METAL COMPOSITE WALL & SOFFIT PANEL

09 30 00 TYPE T-5 U.N.O.
CERAMIC WALL TILE

07 54 19
PVC ROOFING SYSTEM

KEYNOTE LEGEND

NUMBER	DESCRIPTION
07 62 00.PP	PARAPET CAP
08 11 13	HOLLOW METAL DOORS AND FRAMES
10 14 00.BDL	BACKLIT DIMENSIONAL LETTERS
10 14 00.DIM	DIMENSIONAL LETTERS
22 40 00.DFF	HI-LO DRINKING FOUNTAIN WITH WATER BOTTLE FILLER, REFER TO PLUMBING
26 00 00.LGT	LIGHTING FIXTURE, REFER TO ELECTRICAL

EXTERIOR FINISH SCHEDULE:

BUILDING MATERIALS	FINISH	REMARKS
	NATURAL CAST CONCRETE	
CAST-IN-PLACE CONCRETE: COLUMNS, SEATS WALLS		
STRUCT STEEL & MISC IRON, METAL FABRICATIONS: COLUMNS, BEAMS, LINTELS, BUILDING CANOPIES, SUNSHADES PARAPET SCREENS, LADDERS, ROOF LADDER (CONSIDERED EXPOSED TO VIEW), PIPE RAILS, DOWNSPOUTS AND ALL MISC. ITEMS	E_U-GM-1	1
COMPOSITE WALL PANELS: WALL AND SOFFIT PANELS, ACCESSORIES, GUTTERS, TRIM, FLASHING AND ALL MISC PROFILE CLOSURE / FILLER SHAPES	FF	
SHEET METAL FLASHING & TRIM: ARCHITECTURAL, GUTTERS, DOWNSPOUTS	E_U-GM-1	1
SHEET METAL FLASHING & TRIM:: UTILITY ITEMS	GALVANIZED	
METAL DOORS AND FRAMES: DOORS, PANELS, FRAMES AND LOUVERS	E_U-GM-1	
SERVICE WINDOWS: FRAMES AND ACCESSORIES	FF	
GLASS: INSULATED GLAZING PANELS	FF	
LOUVERS: LOUVER AND FRAMES	E_U-GM-1	
CEMENT PLASTER: CEMENT PLASTER, METAL ACCESSORIES	E_CP-2	
TILE: CERAMIC TILE	FF	
PLUMBING: VENTS THRU ROOF, DRINKING FOUNTAINS	FF	
MECHANICAL: EXHAUST FANS, MECHANICAL UNITS, & MISC. EQUIPMENT	FF	
MECHANICAL: EXPOSED TO VIEW VENT STACKS	FF	
ELECTRICAL: SWITCHBOARDS, TRANSFORMERS, PANELS, LIGHT FIXTURES, FIRE ALARM DEVICES, SPEAKERS	FF	
ELECTRICAL: CONDUITS	E_U-GM-1	1

EXTERIOR COLOR SCHEDULE:

ELEMENTS	COLOR DESIGNATION	COLOR NAME	MANUFACTURER	COLOR NUMBER
CEMENT PLASTER, METAL ACCESSORIES	P-1	Parlier Stucco Beige	Ro's Precise	VP59-2507
	P-3	Earthy Russet	Ro's Precise	VP59-2508
GUTTER AND FASCIA TRIMS	MCM-1	Custom color to match Pitt (Loyal Royal)	NICHIHA	-
STEEL COLUMNS	P-2	Pitt (Loyal Royal)	Ro's Precise	VP5-2445
COMPOSITE WALL PANELS: WALLS/CANOPY SOFFIT	MCM-1	Custom color to match Pitt (Loyal Royal)	NICHIHA	-
HM WINDOW FRAMES	P-2	Pitt (Loyal Royal)	Ro's Precise	VP5-2445
HM DOORS & CORRESPONDING FRAMES	P-2	Pitt (Loyal Royal)	Ro's Precise	VP5-2445
	P-1	Parlier Stucco Beige	Ro's Precise	VP59-2507
TILE: WALLS	TL-5	Tuscany	Daltile	NH74
	TL-6	Carrara	Daltile	NH33
ALUMINUM SERVING WINDOW FRAME	MT-1	Sapphire Blue	Quikserv	RAL 5003

P-X, MCM-X & TL-X = COLOR DESIGNATION NUMBER

EXTERIOR PAINT FINISHES:
(REFER TO SPECIFICATION SECTION - PAINTING AND COATING)

E_U-GM-1 = EXTERIOR UN-GALVANIZED METAL SYSTEM 1
E_CP-2 = EXTERIOR FIBER-CEMENT MATERIALS/CEMENT PLASTER SYSTEM 2
FF = FACTORY FINISH

REMARKS:
1 = ALL EXPOSED TO VIEW

BUILDING ELEMENTS DIAGRAM:

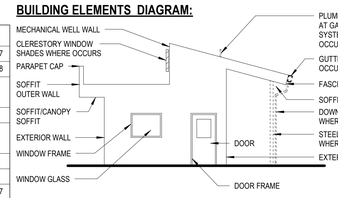

EXTERIOR FINISH NOTES

1. THESE SCHEDULES ARE PROVIDED FOR THE CONVENIENCE OF THE CONTRACTOR. CONTRACTOR IS RESPONSIBLE TO FIELD VERIFY ALL CONDITIONS AND DIMENSIONS PRIOR TO BID AND APPLICATION
2. CEMENT PLASTERING: P-1, UNLESS NOTED OTHERWISE.
   ALL EXTERIOR WALLS AND SOFFIT OUTER WALLS (METAL SIDING, WOOD SIDING, ETC): P-1, U.N.O.
3. BACK OF PARAPET FINISHED AND COLORS SIMILAR TO SOFFIT OUTER WALL U.N.O.
4. PAINT DOWNSPOUTS, COLOR TO MATCH ADJACENT SURFACE COLOR, TYP.
5. SHEET METAL PARAPET CAPS: MATCH SOFFIT OUTER WALL COLOR, U.N.O.
6. SOFFITS: MATCH CORRESPONDING EXTERIOR WALL COLOR, U.N.O.
7. PAINT ALL PIPING, UNWRAPPED DUCTWORK, ELECTRICAL CONDUITS, LOUVERS AND ALL MISCELLANEOUS ITEMS EXPOSED TO VIEW TO MATCH ADJACENT SURFACE COLOR
8. CEMENT PLASTER WALLS PERPENDICULAR TO ELEVATIONS AND NOT SHOWN ELSEWHERE SHALL BE THE SAME COLOR AS FACE PLANE, U.N.O.
9. DO NOT PAINT. PROTECT FROM OVER SPRAYED PAINT ALL FACTORY FINISHED MECHANICAL AND ELECTRICAL EQUIPMENT UNITS, PLATES AND LABELS
10. DO NOT PAINT. PROTECT FROM OVER SPRAYED PAINT ALL FACTORY FINISHED EXTERIOR DEVICES, NOT LIMITED TO HORNS, SPEAKERS, OUTLETS, LIGHT FIXTURES, AND PERMANENT ROOM SIGNS
11. COMPOSITE METAL PANELS, CANOPY SOFFIT: MCM-1
12. HOLLOW METAL WINDOW FRAMES: P-2 U.N.O.
13. HOLLOW METAL DOORS AND CORRESPONDING FRAMES: P-2 U.N.O.
14. CEMENT PLASTER WALL PORTIONS NOT SHOWN ELSEWHERE SHALL BE THE SAME TYPE & COLOR AS FACE PLANE, U.N.O.

GENERAL ELEVATION NOTES

1. ALL BUILDING EXPANSION JOINT TO BE 1" UNLESS NOTED OTHERWISE
2. EXPOSED CONCRETE WALLS, COLUMNS, AND BEAMS SHALL BE RUBBED GROUT FINISH TO ACHIEVE SMOOTH FINISHED PER **SPEC SECTION 01 73 29**
3. FLEXIBLE MEMBRANE FLASHING AT WINDOWS SILLS AND LINTELS SHALL HAVE PRE-FORMED END DAMS
4. DOWNSPOUTS SHALL HAVE 16 GAUGE PRE-FINISHED DOWNSPOUT BOOTS TO 6'-0" ABOVE FINISH GRADE. COLOR SELECTED BY ARCHITECT
5. DOWNSPOUTS AND/OR ROOF DRAINS SHALL BE CONNECTED TO STORM DRAIN SYSTEM UNLESS NOTED OTHERWISE. REFERENCE CIVIL FOR STORM DRAIN CONNECTION DETAILS AND LOCATIONS
6. ALL DETAILS, MATERIAL AND FINISHES SHALL BE CONSIDERED "TYPICAL" FOR ALL SIMILAR CONDITIONS UNLESS NOTED OTHERWISE
7. REFER TO EXTERIOR FINISH SCHEDULE FOR DESIGNATED PAINT TYPES ASSOCIATED TO EACH MATERIAL/FINISH
8. REFER TO **SPEC SECTION 09 90 00 - PAINTING AND COATING** FOR PAINT TYPES AND SYSTEMS
9. REFER TO EXTERIOR COLOR SCHEDULE FOR COLORS
10. CEMENT PLASTERING: CEMENT PLASTER SYSTEM, ACCESSORIES, REFER TO DETAIL H5 / AX3.5
11. PLUMBING: RAIN WATER LEADER OVERFLOW, REFER TO DETAIL H14 / AX3.4
    SEE PLUMBING DRAWINGS FOR LOCATIONS
12. SHEET METAL: COUNTER FLASHING BOOT. LAP UNDER CEMENT PLASTER, WATER BARRIER AND PARAPET CAP, AND OVER PARAPET WALL FLASHING. REFER TO DETAIL L14 / AX3.3, H14 / AX3.3, H18 / AX3.3

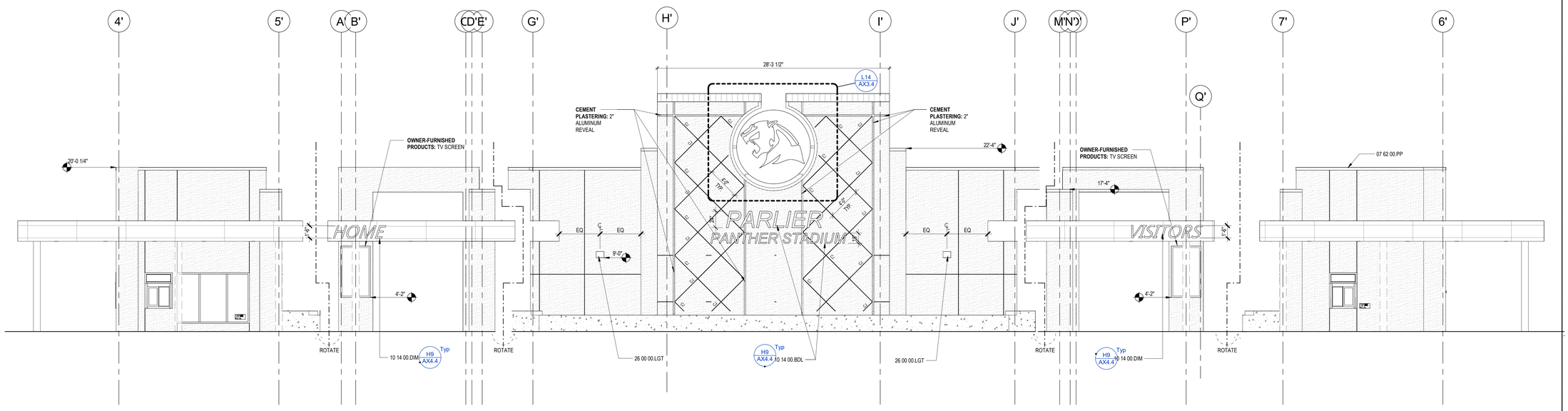

G18 SOUTHWEST ELEVATION
3/16" = 1'-0"

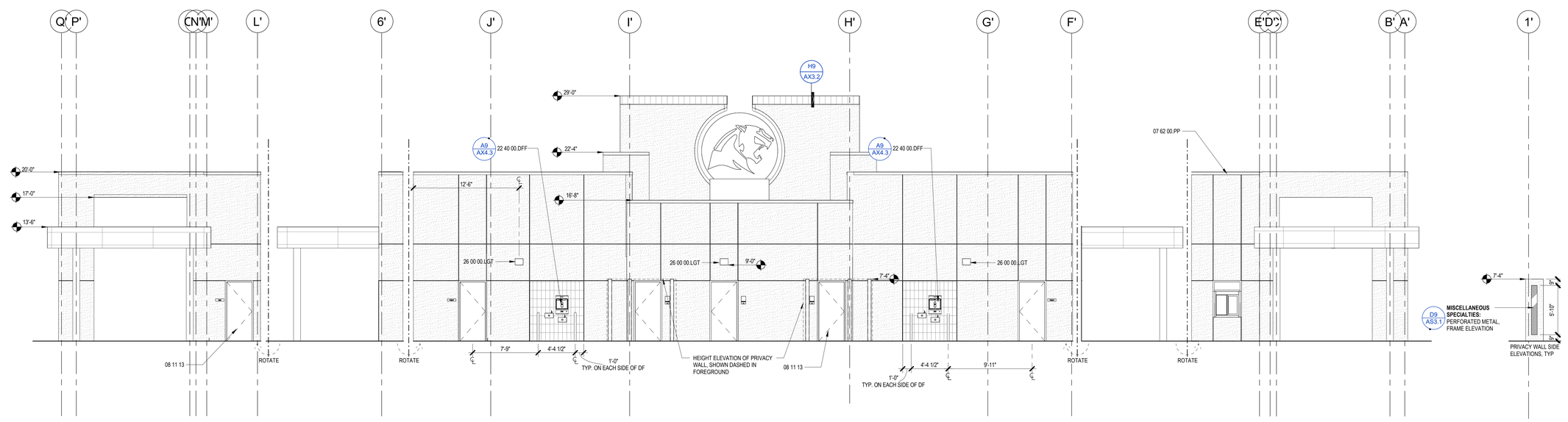

A18 NORTHEAST ELEVATION
3/16" = 1'-0"

Plot Stamp:
6/23/2026 9:33:55 AM

PBK
www.pbk.com
559-448-8400
FRESNO, CA

PARLIER HS STADIUM REPLACEMENT

603 3rd Street
Parlier, CA 93648

CLIENT PROJECT NO: 250093
DSA SUBMISSION
DSA APPL. NO.: 02-124002 DSA FILE NO.: 10-H12

PARLIER UNIFIED SCHOOL DISTRICT

LICENSED ARCHITECT
MICHELE GARGANO
No. C-32550
Michele Gargano
RENEWAL DATE
MAR 31, 2027
STATE OF CALIFORNIA

CLIENT	
PARLIER UNIFIED SCHOOL DISTRICT	
DATE	PROJECT NUMBER
2026/02/09	250093

DRAWING HISTORY

No.	Description	Date
1	Addendum #1	2026-05-29

CHECKED BY: Checker
DRAWN BY: Author

BUILDING M - EXTERIOR ELEVATIONS

AM4.1

BUILDING M - BUILDING SECTIONS
AM5.1
FOR BLUEBEAM LABELING/OCR:

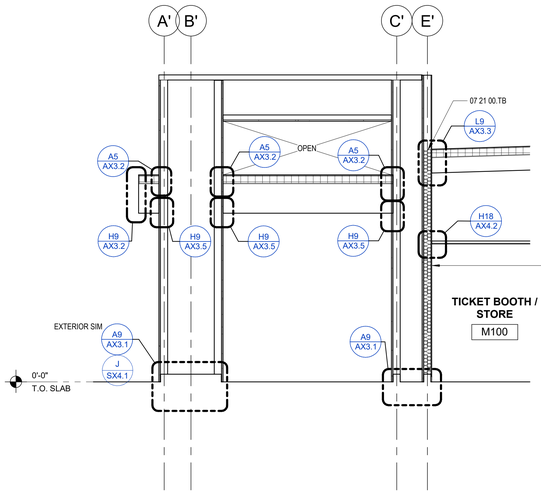

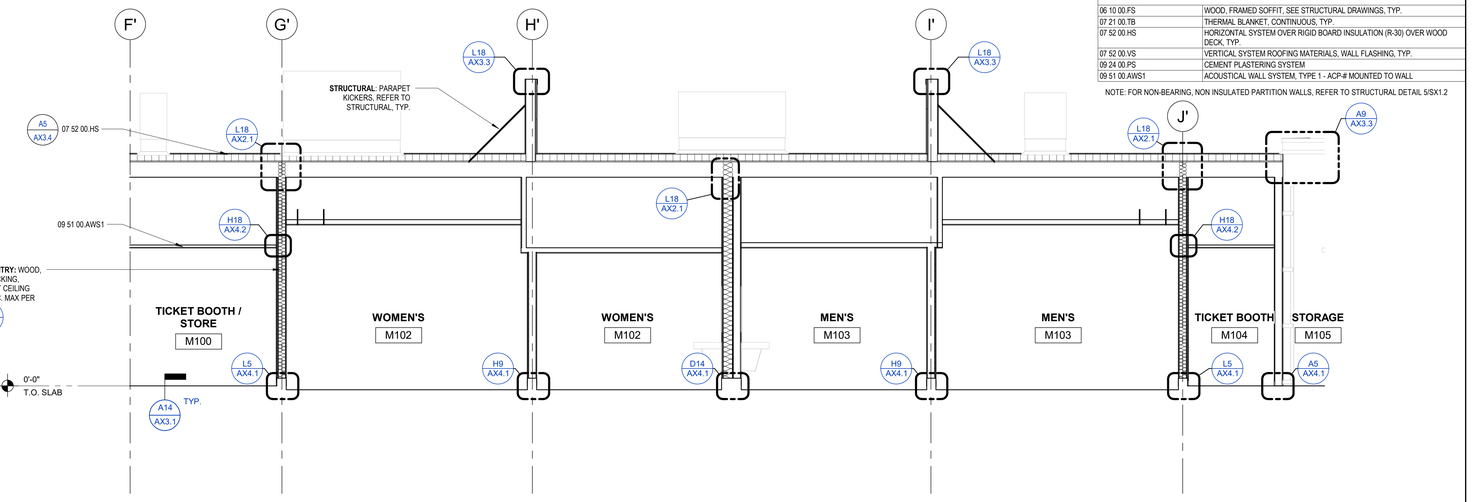

KEYNOTE LEGEND

NUMBER	DESCRIPTION
06 10 00.FS	WOOD, FRAMED SOFFIT, SEE STRUCTURAL DRAWINGS, TYP.
07 21 00.TB	THERMAL BLANKET, CONTINUOUS, TYP.
07 52 00.HS	HORIZONTAL SYSTEM OVER RIGID BOARD INSULATION (R-30) OVER WOOD DECK, TYP.
07 52 00.VS	VERTICAL SYSTEM ROOFING MATERIALS, WALL FLASHING, TYP.
09 24 00.PS	CEMENT PLASTERING SYSTEM
09 51 00.AWS1	ACOUSTICAL WALL SYSTEM, TYPE 1 - ACP.# MOUNTED TO WALL

NOTE: FOR NON-BEARING, NON INSULATED PARTITION WALLS, REFER TO STRUCTURAL DETAIL 5/SX1.2

K18 SECTION 1 - BUILDING M
1/4" = 1'-0"

K12 SECTION 2 - BUILDING M
1/4" = 1'-0"

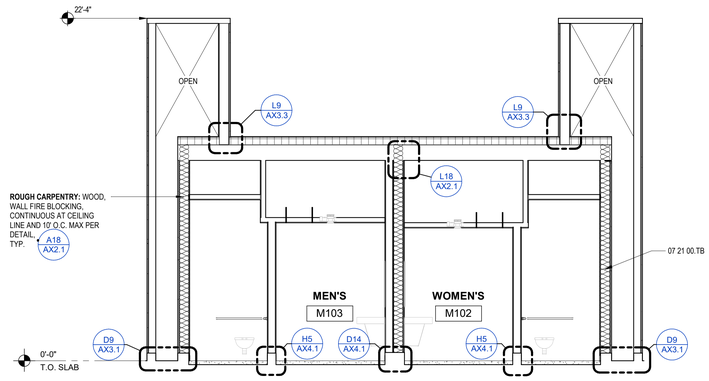

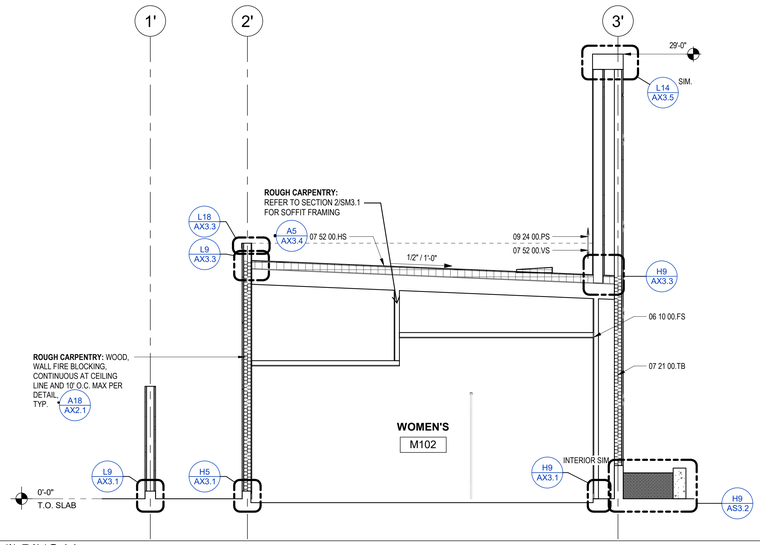

F18 SECTION 3 - BUILDING M
1/4" = 1'-0"

F9 SECTION 4 - BUILDING M
1/4" = 1'-0"

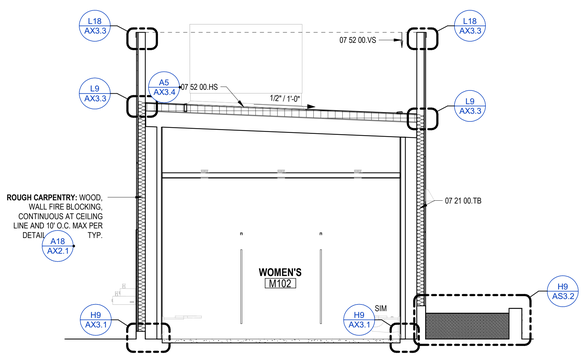

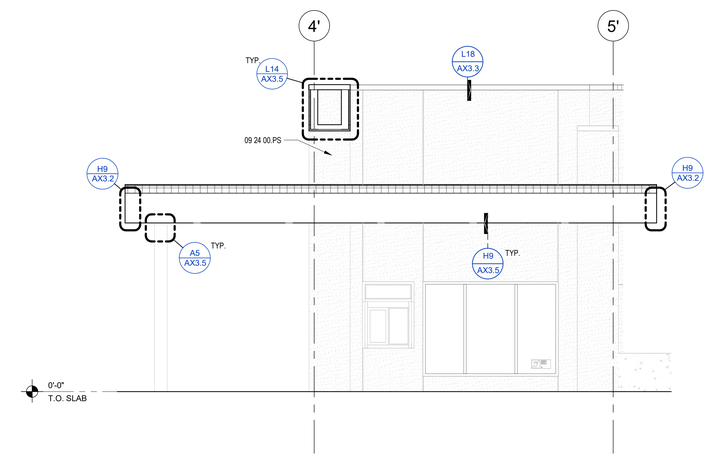

A18 SECTION 5 - BUILDING M
1/4" = 1'-0"

A9 SECTION 6 - BUILDING M
1/4" = 1'-0"

PARLIER HS STADIUM REPLACEMENT

603 3rd Street
Parlier, CA 93648

CLIENT PROJECT NO: 250093
DSA SUBMISSION
DSA APPL. NO.: 02-124002 DSA FILE NO.: 10-H12

PARLIER UNIFIED SCHOOL DISTRICT

LICENSED ARCHITECT
MICHELE GARGANO
No. C-32550
RENEWAL DATE
MAR 31, 2027
STATE OF CALIFORNIA

CLIENT
PARLIER UNIFIED SCHOOL DISTRICT

DATE	PROJECT NUMBER
2026/02/09	250093

DRAWING HISTORY

No.	Description	Date
5	DSA Comments_DWG V2	2026-06-25

CHECKED BY: Checker
DRAWN BY: Author

BUILDING M - BUILDING SECTIONS

AM5.1

PBK
www.pbk.com
559-448-8400
FRESNO, CA

Plot Stamp:
6/23/2026 9:33:57 AM

BUILDING M - INTERIOR ELEVATIONS
AM6.1
FOR BLUEBEAM LABELING/OCR:

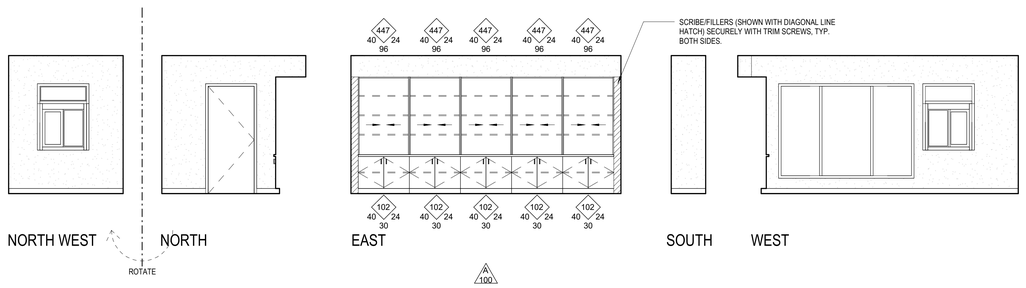

M100 TICKET BOOTH / STORE



M101 RESTROOM

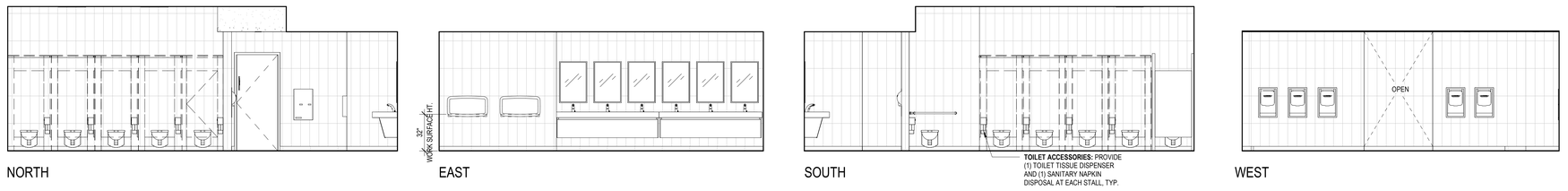

M102 WOMEN'S



M103 MEN'S

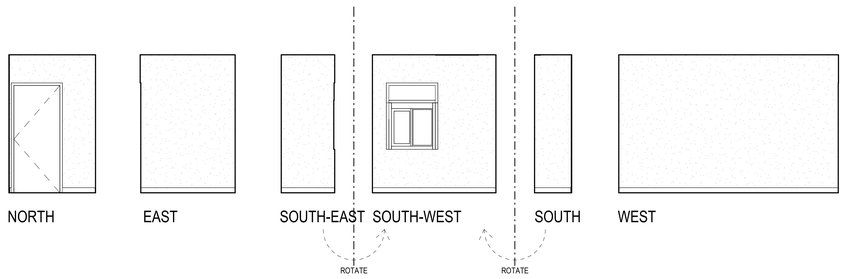

M104 TICKET BOOTH

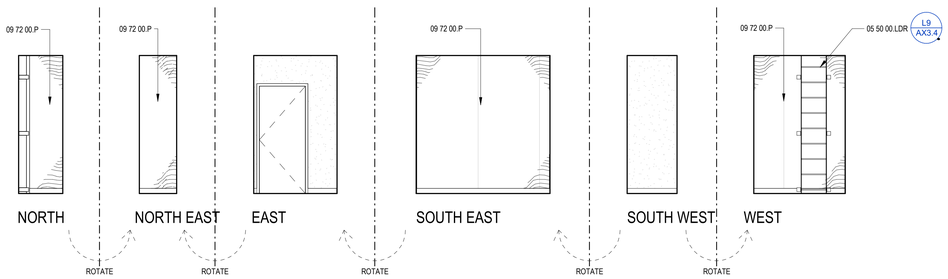

M105 STORAGE

KEYNOTE LEGEND

NUMBER	DESCRIPTION
05 50 00.LDR	[STEEL or ALUMINUM] LADDER
09 72 00.P	3/4" PLYWOOD PANELING WITH A FACE VENEER

GENERAL NOTES

1. REFER TO REFLECTED CEILING PLAN FOR CEILING AND SOFFIT HEIGHTS.
2. REFER TO SHEET AX6.1 FOR CASEWORK ANCHORAGE DETAILS.
3. FOR ELEVATIONS THAT ARE NOT ILLUSTRATED MATCH FINISHES OF TYPICAL ROOM ELEVATION AND REFER TO INTERIOR FINISH SCHEDULE.
4. REFER TO INTERIOR FINISH SCHEDULE TYPICAL PAINT COLORS.
5. ALL EXPOSED METAL DECK AND STRUCTURAL STEEL IS TO COMPLY WITH "ARCHITECTURALLY EXPOSED STRUCTURAL STEEL FRAMING", REFER TO SPECIFICATION.
6. GYPSUM BOARD, METAL ACCESSORIES, REFER TO DETAIL A18 / AX4.2
7. WALL COVERINGS, FRP PANELS, REFER TO DETAIL A14 / AX4.2
8. GYPSUM BOARD ASSEMBLIES: CONTROL JOINT, REFER TO DETAIL H5 / AX4.2
9. PROVIDE BACKING FOR TOILET ACCESSORIES, GRAB BARS REFER TO DETAIL A18 / AX4.3
10. FOR TYP. TOILET PARTITIONS, FLOOR AND WALL ANCHORAGE REFER TO DETAILS H9 / AX4.3 L9 / AX4.3

INTERIOR WALLS LEGEND

P-4 PAINTED GYPSUM BOARD

TL-4 CERAMIC TILE

P-2 PAINTED GYPSUM BOARD

FRP-1 FRP PANELS

TL-1, TL-2, & TL-3 CERAMIC TILE, REFER TO SHEET AX7.1 FOR PATTERN

SYMBOLS LEGEND-INT. ELEVA.

CASEWORK SYMBOL

HEIGHT
MODIFIED
DEPTH
CASEWORK MODEL
LOCK
WIDTH

NOTE: DIMENSIONS ARE TO THE NEAREST WHOLE NUMBER. CONTRACTOR TO FIELD VERIFY DIMENSIONS PRIOR TO FABRICATION

FINISH KEYNOTE SYMBOL

XX-XX = INDICATES FINISH, SEE COLOR SCHEDULE ON

A #### **CABINET GROUP NO.** REFER TO MODULAR CASEWORK SCHEDULE AND LAB CASEWORK SCHEDULE.

SYMBOL LEGEND

10 **EQUIPMENT NO:** REFER TO EQUIPMENT SCHEDULE.

ELECTRICAL: SPEAKER @ +7' - 6" TO CENTER OF DEVICE, UNLESS NOTED OTHERWISE.

ELECTRICAL: CLOCK @ +7' - 6" TO CENTER OF DEVICE, UNLESS NOTED OTHERWISE.

ELECTRICAL: CLOCK/SPEAKER @ +7' - 6" TO CENTER OF DEVICE, UNLESS NOTED OTHERWISE.

FEC **FIRE PROTECTION SPECIALTIES:** FIRE EXTINGUISHER CABINET, TOP OF CABINET @ +5' - 0" UNLESS NOTED OTHERWISE. PROVIDE FIRE RATED CABINET AT RATED WALLS

TOILET ACCESSORIES: MIRROR, TYP

PLUMBING: WATER CLOSET, SEE PLUMBING

TOILET ACCESSORIES: DIAPER CHANGING STATION, TYP

PLUMBING: LAVATORY, SEE PLUMBING

PLUMBING: URINAL, SEE PLUMBING

PLUMBING: DRINKING FOUNTAIN, SEE PLUMBING A5 / AX4.3

TOILET ACCESSORIES: ELECTRIC HAND DRYER, TYP

PLUMBING: MOP SINK, SEE PLUMBING

TOILET ACCESSORIES: GRAB BAR, TYP

TOILET ACCESSORIES: SANITARY NAPKIN DISPENSER, TYP.

TOILET PARTITIONS: FLOOR ANCHORED OVERHEAD BRACE

LMB 5' x 6'

MARKERBOARD & TACKBOARD: FRAMELESS LIQUID MARKERBOARD, LCS ELITE A9 / AX4.2

METAL LOCKERS: KNOCKED-DOWN ATHLETIC LOCKERS

ACOUSTICAL WALL PANELS: ACOUSTICAL PANELS (AP-1 & AP-2) L14 / AX4.3

PBK
www.pbk.com
559-448-8400
FRESNO, CA

PARLIER HS STADIUM REPLACEMENT

603 3rd Street
Parlier, CA 93648

CLIENT PROJECT NO: 250093
DSA SUBMISSION
DSA APPL. NO.: 02-124002 DSA FILE NO.: 10-H12

PARLIER UNIFIED SCHOOL DISTRICT

LICENSED ARCHITECT
MICHELE GARGANO
No. C-32550
RENEWAL DATE
MAR 31, 2027
STATE OF CALIFORNIA

CLIENT
PARLIER UNIFIED SCHOOL DISTRICT

DATE	PROJECT NUMBER
2026/02/09	250093

DRAWING HISTORY

No.	Description	Date
2	Addendum #2	2026-05-28

CHECKED BY: Checker
DRAWN BY: Author

BUILDING M - INTERIOR ELEVATIONS

AM6.1

Plot Stamp:
6/23/2026 9:34:03 AM

BUILDING N - FLOOR PLAN
AN1.1
FOR BLUEBEAM LABELING/DOOR:

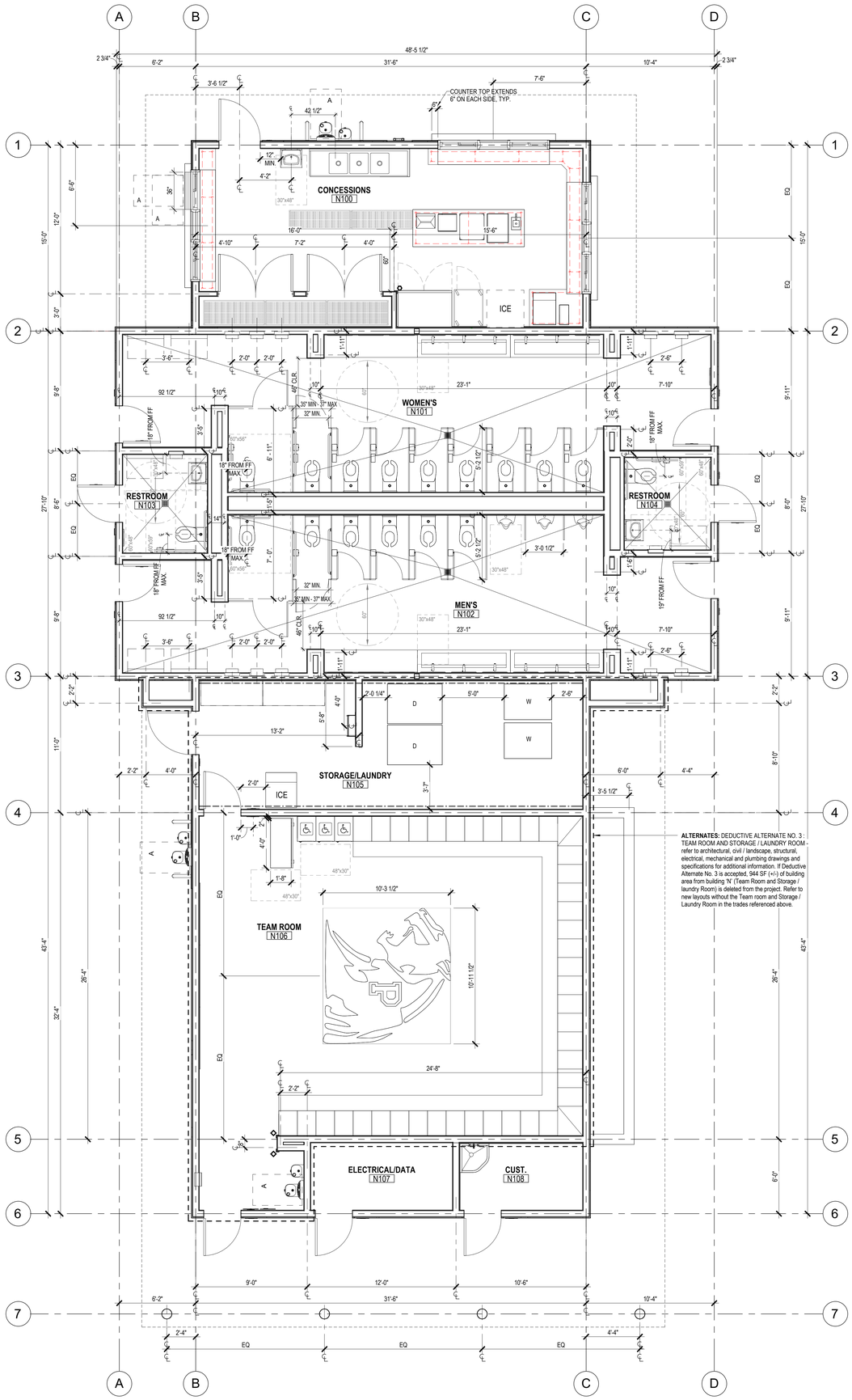

ALTERNATES: DEDUCTIVE ALTERNATE NO. 3 : TEAM ROOM AND STORAGE / LAUNDRY ROOM - refer to architectural, civil / landscape, structural, electrical, mechanical and plumbing drawings and specifications for additional information. If Deductive Alternate No. 3 is accepted, 944 SF (+/-) of building area from building 'N' (Team Room and Storage / laundry Room) is deleted from the project. Refer to new layouts without the Team room and Storage / Laundry Room in the trades referenced above.

A18 FLOOR PLAN - BUILDING N
1/4" = 1'-0"

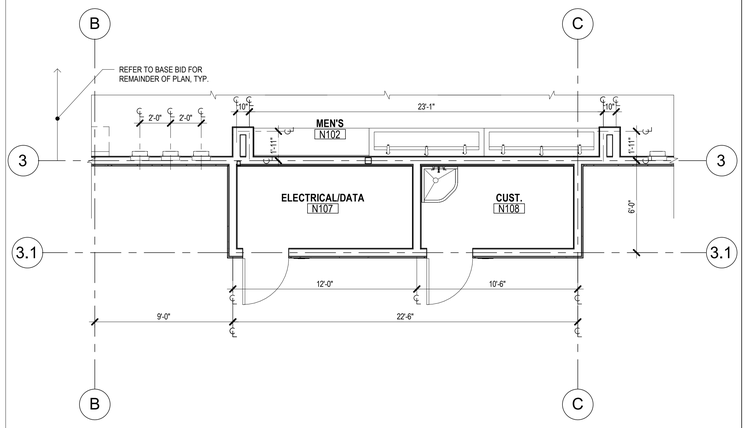

DEDUCT ALT #3 - FLOOR PLAN

FLOOR PLAN LEGEND

SYMBOLS

STUD WALL, STUDS AND INTERIOR WALL MATERIALS CONTINUOUS FROM FLOOR TO UNDERSIDE OF FLOOR OR ROOF DECK. STUDS AT 16" O.C. UNLESS OTHERWISE NOTED. INTERIOR WALL MATERIAL SHALL INCLUDE BATT INSULATION, SOUND DEADENING BOARD, PLYWOOD SHEATHING, GYPSUM BOARD, AND CEMENT PLASTER/ CERAMIC TILE SETTING BED WHERE OCCURS. REFER TO INTERIOR ELEVATIONS AND INTERIOR FINISH SCHEDULES FOR ADDITIONAL WALL FINISHES.

1 HR. OCCUPANCY SEPARATION / FIRE BARRIER - (1 HR. FIRE RESISTIVE CONSTRUCTION, 45 MIN. DOOR ASSEMBLIES, 45 MIN. WINDOW ASSEMBLIES)

0 REFERENCE GRID

Room name
101 ROOM DESIGNATION

NOTES

1. ALL DIMENSIONS ARE TO CENTER LINE, UNO
2. ALL ELEVATION DIMENSIONS ARE ABOVE FINISH FLOOR AT EACH FLOOR LEVEL, UNO
3. DIMENSIONS NOTED AS "+/-" ARE NOMINAL
4. FLOOR DRAINS (FD) AND FLOOR SINKS (FS) SHALL BE SET -3/4" AND A MIN. OF 3'-0" FROM NEAREST WALL WITH A MAXIMUM SLOPE OF FLOOR TO DRAIN NOT TO EXCEED 1:48, UNO
5. FOR MINIMUM REQUIRED CLEARANCES, GRAB BAR SIZES AND STANDARDS SEE DETAIL D18/AX4.3 TYPICAL ACCESSIBILITY STANDARDS
6. FOR MAXIMUM RESTROOM ACCESSORY HEIGHTS AND PROJECTIONS SEE DETAIL D18/AX4.3 TYPICAL ACCESSIBILITY STANDARDS (TOILET ROOM ACCESSORIES)
7. FIRE RESISTIVE ASSEMBLIES:

   A. ALL THROUGH PENETRATIONS AND WALL MEMBRANE PENETRATIONS THROUGH WALLS OF FIRE RESISTIVE CONSTRUCTION SHALL BE PROTECTED IN ACCORDANCE WITH THEIR FIRE RESISTIVE RATINGS

   B. ALL WALLS OF FIRE AND/OR SMOKE RESISTIVE CONSTRUCTION SHALL BE PERMANENTLY IDENTIFIED WITH SIGNS OR STENCILING IN LETTERING NOT LESS THAN 3 INCHES (76 MM) IN. HEIGHT WITH A MINIMUM 3/8 INCH (9.5 MM) STROKE IN A CONTRASTING COLOR INCORPORATING THE FOLLOWING WORDING: FIRE AND/OR SMOKE BARRIER "#" HOUR RATED, PROTECT ALL OPENINGS. SIGNS OR STENCILING SHALL BE LOCATED ABOVE CEILINGS ON BOTH SIDES OF THE WALL, LOCATED 15'-0" FROM ENDS OF WALL AND AT INTERVALS NOT TO EXCEED 30'-0" HORIZONTALLY ALONG THE WALL OR PARTITION. NOTE: "#" INDICATES THE HOURLY RATING OF THE WALL OR PARTITION

GENERAL ARCH PLAN NOTES

1. ALIGN FINISHED FACE OF WALLS WHERE WALL PARTITIONS OF DIFFERING THICKNESS ABUT AND OR ADJOIN IN THE SAME PLANE.
2. PROVIDE AND INSTALL CONTINUOUS REVEAL TRIM AT JOINT WHERE GYPSUM BOARD WALL PARTITIONS ABUT AND OR ADJOIN MASONRY WALL PARTITIONS IN THE SAME PLANE.
3. ALL DOOR THRESHOLDS AT ALL EXTERIOR DOORS SHALL BE SET IN FULL BED OF SEALANT.
4. COORDINATE ALL ROOF DRAIN LEADER LOCATIONS WITH FLOOR PLAN PRIOR TO FLOOR SLAB CONSTRUCTION.
5. PROVIDE AND INSTALL SELF-LEVELING UNDERLAYMENT WHERE UNEVEN FLOOR SLAB EXISTS PRIOR TO INSTALLATION OF FLOOR FINISHES.
6. COORDINATE HOUSEKEEPING PAD LOCATIONS AND DIMENSIONS WITH EQUIPMENT TO BE INSTALLED.
7. ALL REQUIRED ACCESSIBLE CLEARANCES FOR ALL ITEMS, INCLUDING BUT NOT LIMITED TO ALL COUNTER TOPS, ALL PLUMBING FIXTURES, ALL DRINKING FOUNTAINS, ALL ELECTRIC WATER COOLERS, ALL LAVATORIES, ALL URINALS, ALL TOILETS SHALL BE STRICTLY ENFORCED.
8. APPLY BITUMINOUS COATING TO ALL CONCEALED STRUCTURAL STEEL MEMBERS AT ALL EXTERIOR CANOPY LOCATIONS.
9. REFER TO OTHER DISCIPLINE DOCUMENTS FOR ADDITIONAL SCOPE OF WORK.

PBK
www.pbk.com
559-448-8400
FRESNO, CA

PARLIER HS STADIUM REPLACEMENT

CLIENT PROJECT NO: 250093
DSA SUBMISSION
DSA APPL. NO.: 02-124002 DSA FILE NO.: 10-H12

603 3rd Street
Parlier, CA 93648

PARLIER UNIFIED SCHOOL DISTRICT

LICENSED ARCHITECT
MICHELE GARGANO
No. C-32593
RENEWAL DATE
MAR 31, 2027
STATE OF CALIFORNIA

CLIENT
PARLIER UNIFIED SCHOOL DISTRICT

DATE	PROJECT NUMBER
2026/02/09	250093

DRAWING HISTORY

No.	Description	Date
5	DSA Comments, DWG V2	2026-06-25

CHECKED BY: Checker
DRAWN BY: Author

BUILDING N - FLOOR PLAN

AN1.1

Plot Stamp:
6/23/2026 9:34:04 AM

BUILDING N - ANNOTATED FLOOR PLAN
AN1.2
FOR BLUEBEAM LABELING/OCR:

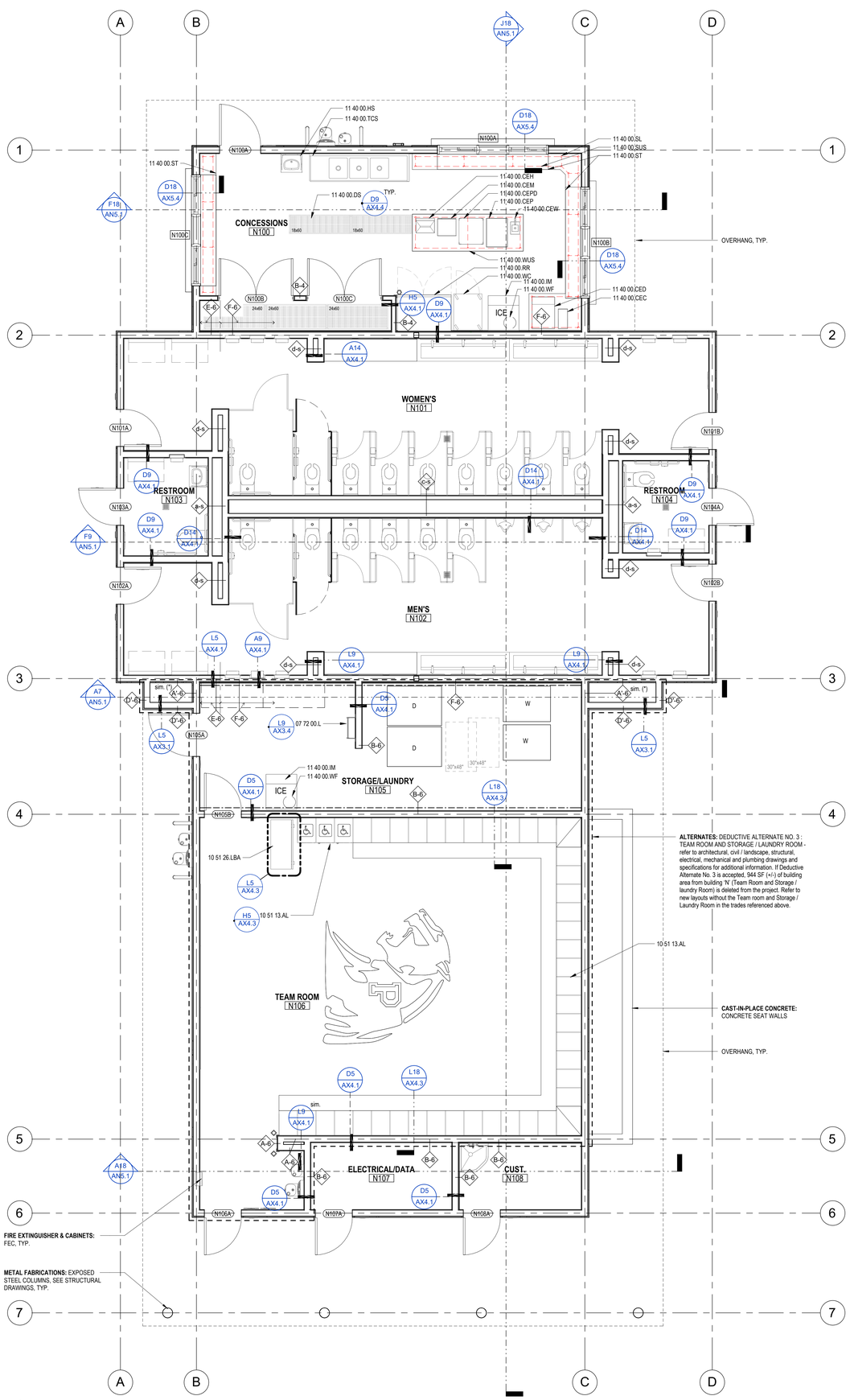

A18 ANNOTATED FLOOR PLAN - BUILDING N
1/4" = 1'-0"

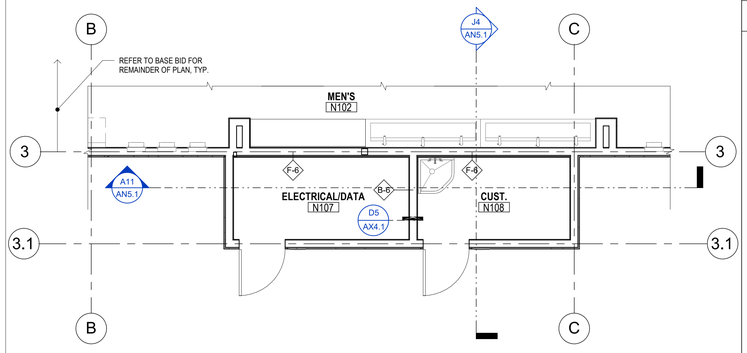

DEDUCT ALT #3 - ANNOTATED FLOOR PLAN

KEYNOTE LEGEND

NUMBER	DESCRIPTION
07 72 00.L	LADDERS, TYP.
10 51 13.AL	METAL LOCKERS[ATHLETIC LOCKERS]
10 51 26.LBA	LOCKER BENCH, ACCESSIBLE
11 40 00.CEC	COUNTER EQUIPMENT, COFFEE BREWER
11 40 00.CED	COUNTER EQUIPMENT, SODA ICE AND BEVERAGE DISPENSER
11 40 00.CEH	COUNTER EQUIPMENT, HOT DOG STEAMER
11 40 00.CEM	COUNTER EQUIPMENT, MICROWAVE OVEN
11 40 00.CEP	COUNTER EQUIPMENT, POPCORN POPPER
11 40 00.CEPD	COUNTER EQUIPMENT, PIZZA DISPLAY WARMER
11 40 00.CEW	COUNTER EQUIPMENT, FOOD TOPPING WARMER
11 40 00.DS	DRY STORAGE SHELVING, TYPICAL OF 5
11 40 00.HS	HAND SINK, REFER TO PLUMBING SCHEDULE
11 40 00.IM	ICE MACHINE AND BIN
11 40 00.RR	REACH-IN REFRIGERATOR
11 40 00.SL	SERVING TABLE, LEG, TYP.
11 40 00.ST	S/S SERVICE TABLE, TYP.
11 40 00.SUS	SERVING TABLE, UNDER SHELF, TYP.
11 40 00.TCS	THREE COMPARTMENT SINK, REFER TO PLUMBING SCHEDULE
11 40 00.WC	WARMING CABINET
11 40 00.WF	WATER FILTER ICE MACHINE, REFER TO PLUMBING SCHEDULE
11 40 00.WUS	108"x36" S/S WORKTABLE, TYP.

FLOOR PLAN LEGEND

SYMBOLS

STUD WALL, STUDS AND INTERIOR WALL MATERIALS CONTINUOUS FROM FLOOR TO UNDERSIDE OF FLOOR OR ROOF DECK. STUDS AT 16" O.C. UNLESS OTHERWISE NOTED. INTERIOR WALL MATERIAL SHALL INCLUDE BATT INSULATION, SOUND DEADENING BOARD, PLYWOOD SHEATHING, GYPSUM BOARD, AND CEMENT PLASTER/ CERAMIC TILE SETTING BED WHERE OCCURS. REFER TO INTERIOR ELEVATIONS AND INTERIOR FINISH SCHEDULES FOR ADDITIONAL WALL FINISHES.

1 HR. OCCUPANCY SEPARATION / FIRE BARRIER - (1 HR. FIRE RESISTIVE CONSTRUCTION, 45 MIN. DOOR ASSEMBLIES, 45 MIN. WINDOW ASSEMBLIES)

0 — REFERENCE GRID

Room name / 101 — ROOM DESIGNATION

(A2) — WALL ASSEMBLY SYMBOLS. REFER TO SHEET AX2.1

101A — DOOR OPENING GROUP NO. REFER TO DOOR OPENING SCHEDULES

REFERENCE POINT

101a — WINDOW OPENING GROUP NO. REFER TO WINDOW OPENING SCHEDULES

VINYL CORNER GUARD TYP. (D9 / AX4.2)

Eq Mark — EQUIPMENT ITEM NO. REFER TO EQUIPMENT SCHEDULE

STAINLESS STEEL CORNER GUARD TYP. (D9 / AX4.2)

sim. (*) — OMIT CEMENT PLASTER INSIDE CHASE WALL

NOTES

1. ALL EXTERIOR WALLS SHALL BE WALL ASSEMBLY TYPE (A-6) UNO
2. ALL INTERIOR WALLS SHALL BE WALL ASSEMBLY TYPE (C-6) UNO
3. FLOOR DRAINS (FD) AND FLOOR SINKS (FS) SHALL BE SET -3/4" AND A MIN. OF 3'-0" FROM NEAREST WALL WITH A MAXIMUM SLOPE OF FLOOR TO DRAIN NOT TO EXCEED 1:48, UNO
   A. IDENTIFYING DEVICES, FOR ROOM SIGNAGE REFER TO SHEET CA3.1 AND SPECIFICATIONS
4. CAST-IN-PLACE CONCRETE, EXTERIOR 6" HIGH RAISED CONCRETE CURB PER DETAIL (A5 / AX3.1) UNO
5. CAST-IN-PLACE CONCRETE, EXTERIOR 6" HIGH RAISED CONCRETE CURB AT ROOMS WITH INTERIOR TILE BASE CONDITION PER DETAILS (D5 / AX3.1) AND (H5 / AX3.1) UNO
6. CAST-IN-PLACE CONCRETE, INTERIOR SILL PLACE CONDITION FOR INTERIOR WALL ASSEMBLY SEE SHEET AX4.1
7. CAST-IN-PLACE CONCRETE, INTERIOR SILL PLACE CONDITION FOR INTERIOR WALL ASSEMBLY TYPE (d-s) PER DETAIL (A14 / AX4.1) UON
8. NON-BEARING, NON RATED WALL TO ROOF JOIST CONDITIONS (TYP. AT ALL INTERIOR WALLS W/ SOUND BLANKET INSULATION). REFER TO DETAIL (L18 / AX2.1)
9. FOR ELEVATIONS THAT ARE NOT ILLUSTRATED, MATCH ADJACENT ELEVATION FINISHES AND REFER TO INTERIOR FINISH SCHEDULE
10. **FIRE EXTINGUISHER AND CABINETS**, FEC, REFER TO DETAIL (A14 / AX4.3)
11. FIRE RESISTIVE ASSEMBLIES:
    A. ALL THROUGH PENETRATIONS AND WALL MEMBRANE PENETRATIONS THROUGH WALLS OF FIRE RESISTIVE CONSTRUCTION SHALL BE PROTECTED IN ACCORDANCE WITH THEIR FIRE RESISTIVE RATINGS
    B. ALL WALLS OF FIRE AND/OR SMOKE RESISTIVE CONSTRUCTION SHALL BE PERMANENTLY IDENTIFIED WITH SIGNS OR STENCILING IN LETTERING NOT LESS THAN 3 INCHES (76 MM) IN. HEIGHT WITH A MINIMUM 3/8 INCH (9.5 MM) STROKE IN A CONTRASTING COLOR INCORPORATING THE FOLLOWING WORDING: FIRE AND/OR SMOKE BARRIER "#" HOUR RATED, PROTECT ALL OPENINGS, SIGNS OR STENCILING SHALL BE LOCATED ABOVE CEILINGS ON BOTH SIDES OF THE WALL, LOCATED 15'-0" FROM ENDS OF WALL AND AT INTERVALS NOT TO EXCEED 30'-0" HORIZONTALLY ALONG THE WALL OR PARTITION. NOTE: "#" INDICATES THE HOURLY RATING OF THE WALL OR PARTITION

GENERAL ARCH PLAN NOTES

1. ALIGN FINISHED FACE OF WALLS WHERE WALL PARTITIONS OF DIFFERING THICKNESS ABUT AND OR ADJOIN IN THE SAME PLANE.
2. PROVIDE AND INSTALL CONTINUOUS REVEAL TRIM AT JOINT WHERE GYPSUM BOARD WALL PARTITIONS ABUT AND OR ADJOIN MASONRY WALL PARTITIONS IN THE SAME PLANE.
3. ALL DOOR THRESHOLDS AT ALL EXTERIOR DOORS SHALL BE SET IN FULL BED OF SEALANT.
4. COORDINATE ALL ROOF DRAIN LEADER LOCATIONS WITH FLOOR PLAN PRIOR TO FLOOR SLAB CONSTRUCTION.
5. PROVIDE AND INSTALL SELF-LEVELING UNDERLAYMENT WHERE UNEVEN FLOOR SLAB EXISTS PRIOR TO INSTALLATION OF FLOOR FINISHES.
6. COORDINATE HOUSEKEEPING PAD LOCATIONS AND DIMENSIONS WITH EQUIPMENT TO BE INSTALLED.
7. ALL REQUIRED ACCESSIBLE CLEARANCES FOR ALL ITEMS, INCLUDING BUT NOT LIMITED TO ALL COUNTER TOPS, ALL PLUMBING FIXTURES, ALL DRINKING FOUNTAINS, ALL ELECTRIC WATER COOLERS, ALL LAVATORIES, ALL URINALS, ALL TOILETS SHALL BE STRICTLY ENFORCED.
8. APPLY BITUMINOUS COATING TO ALL CONCEALED STRUCTURAL STEEL MEMBERS AT ALL EXTERIOR CANOPY LOCATIONS.
9. REFER TO OTHER DISCIPLINE DOCUMENTS FOR ADDITIONAL SCOPE OF WORK.

PBK
www.pbk.com
559-448-8400
FRESNO, CA

PARLIER HS STADIUM REPLACEMENT

603 3rd Street
Parlier, CA 93648

CLIENT PROJECT NO: 250093
DSA SUBMISSION
DSA APPL. NO.: 02-124002 DSA FILE NO. : 10-H12

PARLIER UNIFIED SCHOOL DISTRICT

LICENSED ARCHITECT — MICHELE GARGANO — No. C-32550 — RENEWAL DATE: MAR 31, 2027 — STATE OF CALIFORNIA

CLIENT
PARLIER UNIFIED SCHOOL DISTRICT

DATE	PROJECT NUMBER
2026/02/09	250093

DRAWING HISTORY

No.	Description	Date

CHECKED BY: Checker
DRAWN BY: Author

BUILDING N - ANNOTATED FLOOR PLAN

AN1.2

Plot Stamp:
6/23/2026 9:34:05 AM

BUILDING N - REFLECTED CEILING PLAN
AN2.1
FOR BLUEBEAM LABELING/OCR:

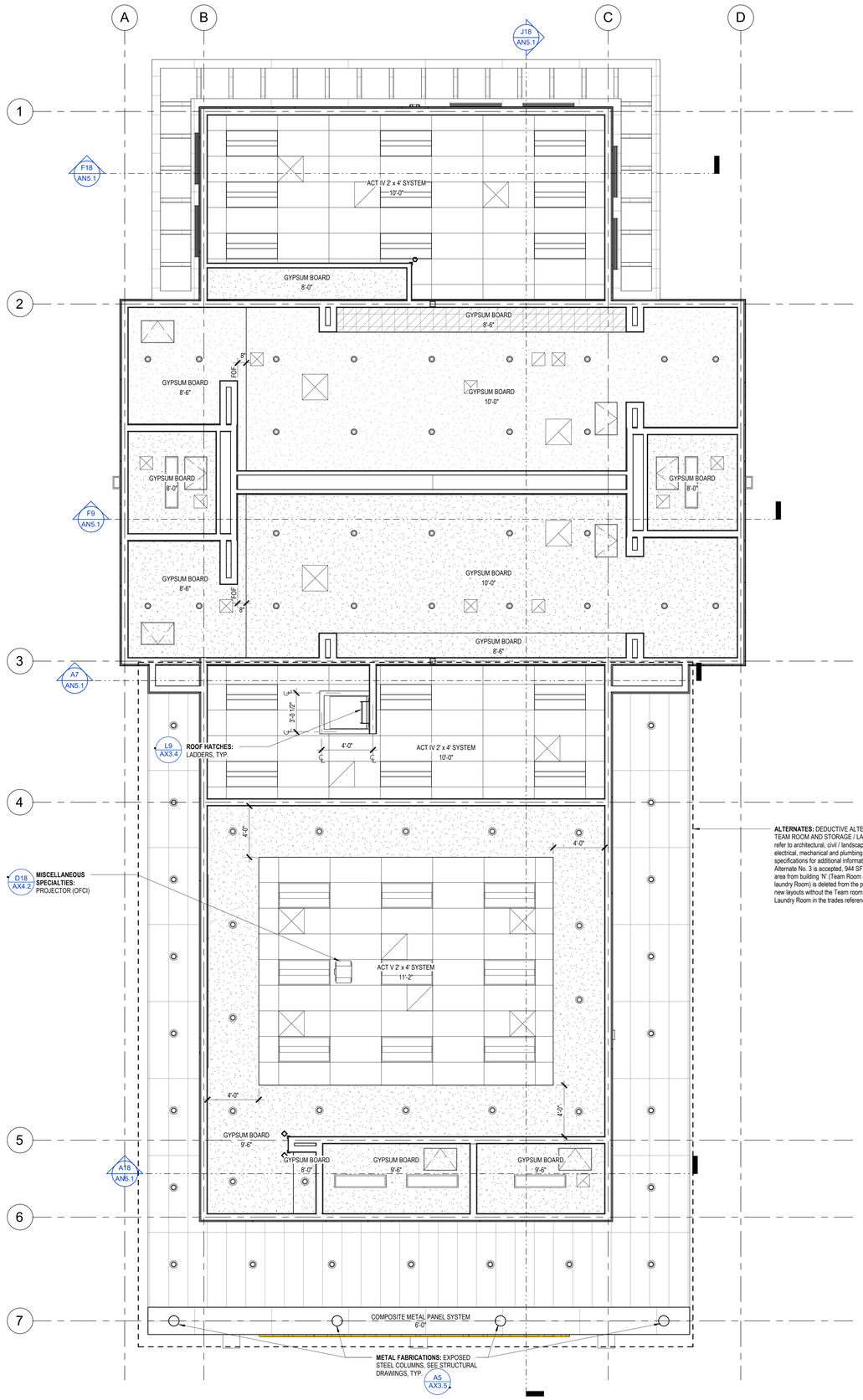

ALTERNATES: DEDUCTIVE ALTERNATE NO. 3 : TEAM ROOM AND STORAGE / LAUNDRY ROOM - refer to architectural, civil / landscape, structural, electrical, mechanical and plumbing drawings and specifications for additional information. If Deductive Alternate No. 3 is accepted, 944 SF (+/-) of building area from building 'N' (Team Room and Storage / laundry Room) is deleted from the project. Refer to new layouts without the Team room and Storage / Laundry Room in the trades referenced above.

A18 REFLECTED CEILING PLAN - BUILDING N
1/4" = 1'-0"

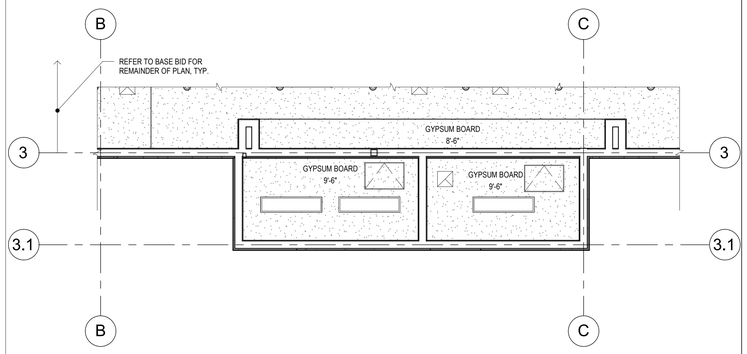

DEDUCT ALT #3 - REFLECTED CEILING PLAN

KEYNOTE LEGEND

NUMBER	DESCRIPTION

CEILING MATERIALS LEGEND

09 51 00
ACOUSTICAL CEILING PANEL,
TYPE IV & V - 2'X4' SUSPENDED ACOUSTICAL
CEILING TILES & GRID, REFER TO DETAIL H18 AX4.2

09 29 00
GYPSUM CEILING BOARD,
5/8" LEVEL 1, NON-RATED

07 42 43 TYPE MCM-1
METAL COMPOSITE WALL & SOFFIT PANEL,
REFER TO SHEET AX3.5 FOR DETAILS

CEILING FIXTURE LEGEND

- CEILING ACCESS PANEL
- **26 51 00** 2' x 2' RECESSED LIGHT FIXTURE *RE: ELECTRICAL*
- **26 51 00** 2' x 4' RECESSED LIGHT FIXTURE *RE: ELECTRICAL*
- **26 51 00** 1' x 4' RECESSED LIGHT FIXTURE *RE: ELECTRICAL*
- **26 51 00** 4.5" RECESSED CAN LIGHT *RE: ELECTRICAL*
- **26 51 00** 4.5" RECESSED COMMERCIAL LIGHT *RE: ELECTRICAL*
- SUPPLY AIR CEILING DIFFUSER *RE: MECHANICAL*
- RETURN AIR GRILLE / REGISTER *RE: MECHANICAL*
- EXHAUST GRILLE / REGISTER *RE: MECHANICAL*

GENERAL CEILING PLAN NOTES

1. ALL CEILING HEIGHTS ARE FROM THE MAIN FLOOR LEVEL WITHIN THE ROOM AND OR SPACE, AND ARE NOT FROM AN ELEVATED FLOOR LEVEL, AND ARE NOT FROM A RECESSED FLOOR LEVEL.
2. NO FIRE SPRINKLER HEADS ARE SHOWN ON ARCHITECTURAL CEILING PLANS. ALL SPRINKLER HEADS SHALL BE CENTERED WITHIN CEILING TILES U.N.O.
3. ONLY CEILING MOUNTED FIXTURES AND EQUIPMENT IS SHOWN ON ARCHITECTURAL CEILING PLANS. REFER TO INTERIOR ELEVATIONS FOR WALL MOUNTED FIXTURES. REFER TO MEPT DOCUMENTS FOR ADDITIONAL INFORMATION CONCERNING CEILING MOUNTED FIXTURES AND OR WALL MOUNTED FIXTURES.
4. CEILING MOUNTED LIGHT FIXTURES ARE SHOWN FOR LOCATION PURPOSES ONLY. COORDINATE WITH ELECTRICAL DOCUMENTS FOR LIGHT FIXTURE DESIGNATIONS.
5. VERIFY LOCATIONS OF ALL CEILING ACCESS PANELS WITH MEPT DOCUMENTS. COORDINATE LOCATIONS OF CEILING ACCESS PANELS WITH ARCHITECT PRIOR TO INSTALLATION. CEILING ACCESS PANEL FIRE RATINGS SHALL MATCH CEILING ASSEMBLY FIRE RATINGS.
6. REFER TO WALL SECTIONS FOR WALL-CEILING INTERFACE.
7. ALL EXTERIOR WALLS SHALL EXTEND TO DECK AND BE SEALED, INCLUDING WALLS ADJACENT TO SOFFITS AND ABOVE DOORS AND WINDOWS. THESE EXTERIOR WALLS SHALL BE DAMPROOFED AND INSULATED.
8. COORDINATE LOCATION OF ALL LIGHT FIXTURES, EXIT SIGNS, GRILLES, AND SPEAKERS WITH MEPT DRAWINGS.
9. PAINT ALL DUCTWORK, CONDUITS, PIPING, GYP BOARD CEILING FURRDOWNS, STRUCTURAL BEAMS, STRUCTURAL JOISTS, STRUCTURAL COLUMNS, METAL ROOF DECK, AND OTHER STRUCTURAL MEMBERS - BOTH EXTERIOR AND INTERIOR - WHERE EXPOSED TO VIEW. COORDINATE PAINT COLOR(S) WITH THE ARCHITECT.
10. LIGHTING FIXTURES TO BE CENTERED AND SPACED EQUALLY UNLESS NOTED OTHERWISE.
11. CONDUIT AND / OR RACEWAY MOUNTED TO STRUCTURAL MEMBERS IN EXPOSED-TO-STRUCTURE SPACES SHALL BE INSTALLED TIGHT TO DECK AND PARALLEL OR PERPENDICULAR TO BUILDING LINES. DO NOT INSTALL CONDUIT, RACEWAY, OR WIRING PERPENDICULAR TO JOISTS NEAR BOTTOM CHORD LEVEL.
12. REFER TO SHEET AN1.1 FOR ADDITIONAL SYMBOLS NOT SHOWN.
13. ALL SOFFIT DIMENSIONS ARE OUTSIDE FACE OF FINISH TO OUTSIDE FACE OF FINISH U.N.O.
14. ALL EXPOSED METAL DECK AND STRUCTURAL STEEL IS TO COMPLY WITH "ARCHITECTURALLY" EXPOSED STRUCTURAL STEEL FRAMING", REFER TO SPECIFICATION.

PBK
www.pbk.com
559-448-8400
FRESNO, CA

PARLIER HS STADIUM REPLACEMENT

603 3rd Street
Parlier, CA 93648

CLIENT PROJECT NO: 250093
DSA SUBMISSION
DSA APPL. NO.: 02-124002 DSA FILE NO.: 10-H12

PARLIER UNIFIED SCHOOL DISTRICT

LICENSED ARCHITECT
MICHELE GARGANO
No. C-32550
RENEWAL DATE
MAR 31, 2027
STATE OF CALIFORNIA

CLIENT
PARLIER UNIFIED SCHOOL DISTRICT

DATE	PROJECT NUMBER
2026/02/09	250093

DRAWING HISTORY

No.	Description	Date

CHECKED BY: Checker
DRAWN BY: Author

BUILDING N - REFLECTED CEILING PLAN

AN2.1

Plot Stamp:
6/23/2026 9:34:07 AM

BUILDING N - ROOF PLAN
AN3.1
FOR BLUEBEAM LABELING/OCR:

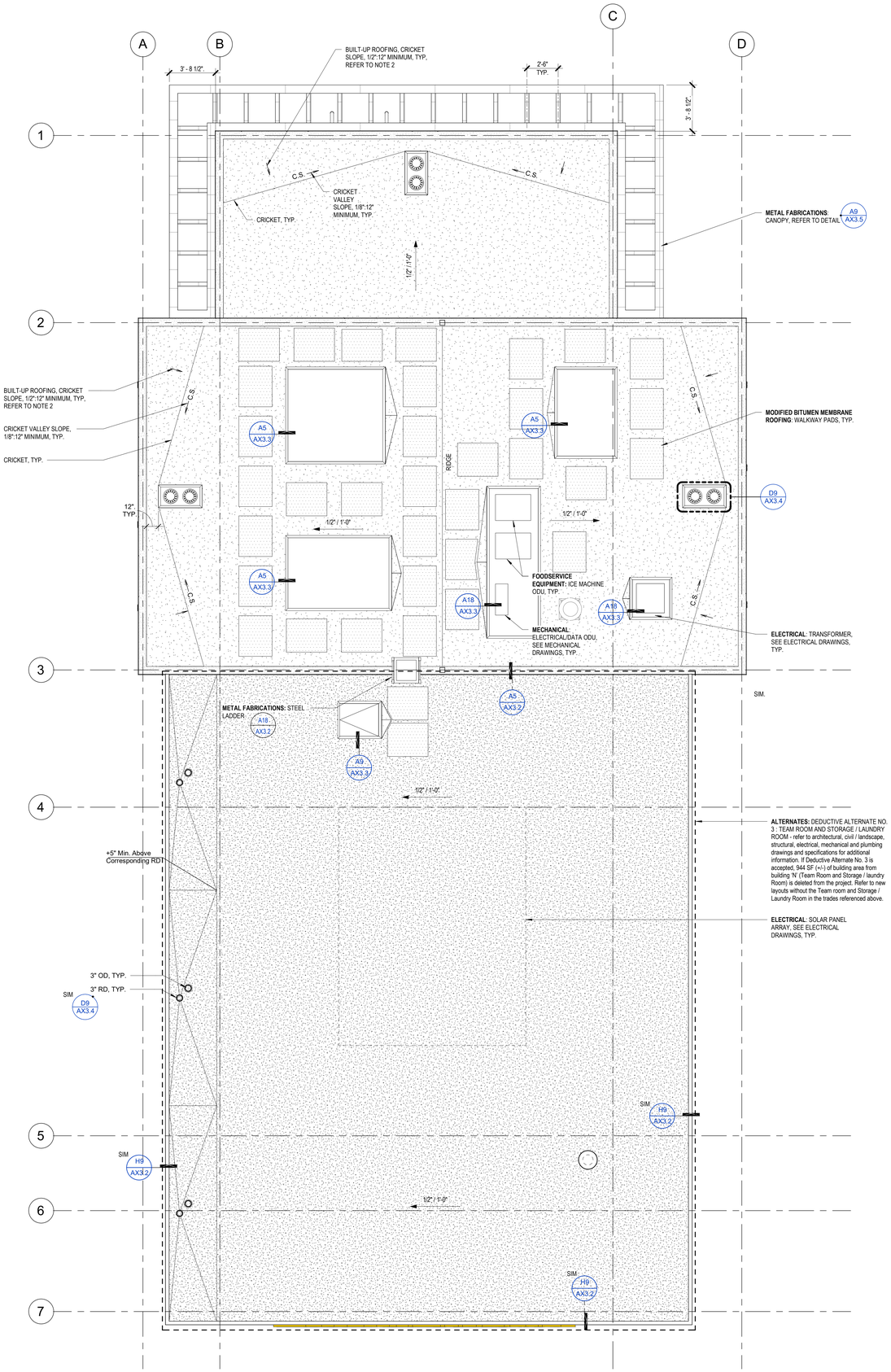

A18 ROOF PLAN - BUILDING N
1/4" = 1'-0"

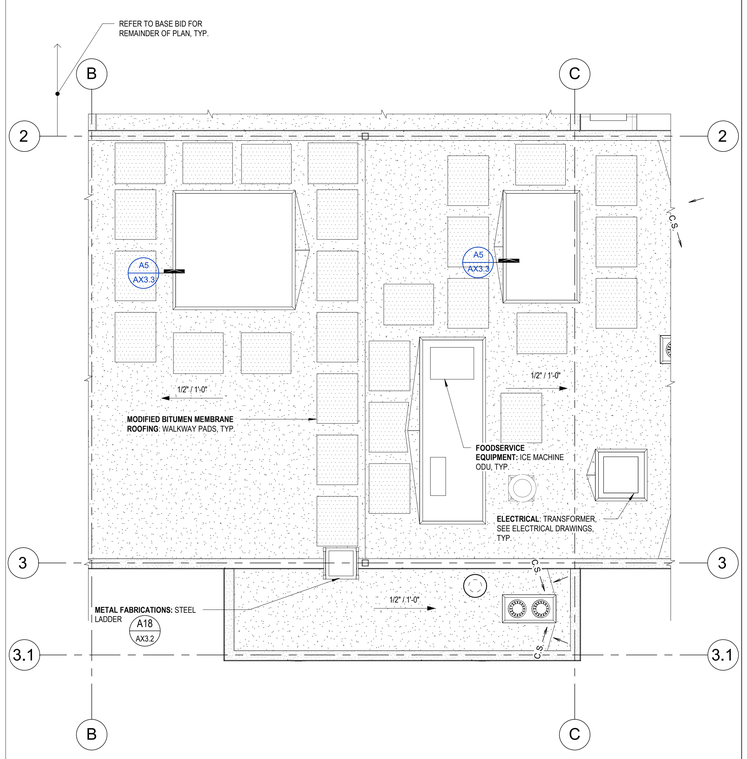

DEDUCT ALT #3 - ROOF PLAN

ROOF LEGEND

POLYVINYL-CHLORIDE ROOFING: PVC ROOFING SYSTEM, TYP.

FORMED METAL ROOF PANELS: GUTTER, EXTENT OF GUTTER.

MODIFIED BITUMINOUS MEMBRANE ROOFING: BUR SYSTEM, TYP.

PVC THERMOPLASTIC MEMBRANE ROOFING: 39" x 32" WALKWAY PROTECTION.

ROOF NOTES & SYMBOLS

SYMBOLS

PLUMBING: ROOF DRAIN AND OVERFLOW, TYP. D9 AX3.4

PF **PLUMBING:** FLUE L5 AX3.3

MECHANICAL: EXHAUST FAN

Slope (DN) DIRECTION OF SLOPE

C.S. CRICKET SLOP SHALL BE 2% MIN.

PLUMBING: CANOPY ROOF DRAIN, TYP. PROVIDE FRAMING/BLOCKING SIMILAR TO DETAIL D9 / AX3.4

PLUMBING: CANOPY OVERFLOW DRAIN, TYP. OVERFLOW DRAIN TO EXTEND 1" BEYOND BOTTOM OF SOFFIT FINISH, MAX.

NOTES

1. REFER TO PLUMBING, MECHANICAL, TELECOMMUNICATIONS, FOOD SERVICE, AND ELECTRICAL FOR ALL ROOF PENETRATIONS AND ROOF MOUNTED EQUIPMENT. FOR APPROPRIATE DETAILS, REFER TO AX3.3 UNLESS OTHERWISE NOTED.
2. ROOF SLOPE AND CRICKETS SHALL BE CONSTRUCTED WITH TAPERED INSULATION TO ACHIEVE SLOPE AS REQUIRED.
3. WHEN INDICATED, SHEET METAL, REGLET AND COUNTER FLASHING OCCURS AT THE BACK SIDE AND/OR THE FRONT SIDE OF PARAPET WALLS. AT EACH ROOF LEVEL SUCH REGLET ELEVATIONS SHALL BE DETERMINED BASED UPON THE DETAILS OF CONSTRUCTION AND BE INSTALLED AT THE SAME HORIZONTAL LEVEL
4. SHEET METAL, COUNTERFLASHING BOOTS SHALL BE INSTALLED AT INTERSECTING PARAPETS THAT HAVE DIFFERENT PARAPET HEIGHTS. FOR CONDITIONS REQUIRING SUCH BOOTS, REFER TO DETAIL L14 AX3.3 AND H18 AX3.3 . D5 AX3.3
5. FOR TALL PIPE/CONDUIT PENETRATION FLASHING, REFER TO DETAIL
6. FOR PLUMBING VENTS PENETRATION FLASHING, REFER TO PLUMBING DWGS AND REFER TO REFER TO DETAIL H5 AX3.3
7. FOR HVAC UNITS, REFER TO MECHANICAL DWGS AND DETAIL A5 AX3.3
8. FOR ODU'S AND TRANSFORMERS ON ROOF, REFER TO ELECTRICAL AND MECHANICAL DWGS AND DETAIL A18 AX3.3

PBK
www.pbk.com
559-448-8400
FRESNO, CA

PARLIER HS STADIUM REPLACEMENT

CLIENT PROJECT NO.: 250093
DSA SUBMISSION DSA FILE NO. : 10-H12
DSA APPL. NO. : 02:124002

PARLIER UNIFIED SCHOOL DISTRICT

603 3rd Street
Parlier, CA 93648

LICENSED ARCHITECT
MICHELE GARGANO
No. C-32500
RENEWAL DATE
MAR 31, 2027
STATE OF CALIFORNIA

CLIENT
PARLIER UNIFIED SCHOOL DISTRICT

DATE	PROJECT NUMBER
2026/02/09	250093

DRAWING HISTORY

No.	Description	Date
4	Addendum #4	2026-05-12

CHECKED BY: Checker
DRAWN BY: Author

BUILDING N - ROOF PLAN

AN3.1

Plot Stamp:
6/23/2026 9:34:08 AM

BUILDING N - EXTERIOR ELEVATIONS
AN4.1
FOR BLUEBEAM LABELING/DOCR:

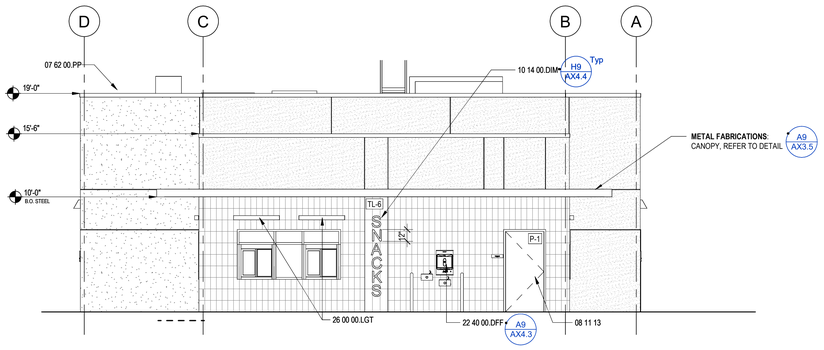

L18 NORTH ELEVATION
3/16" = 1'-0"

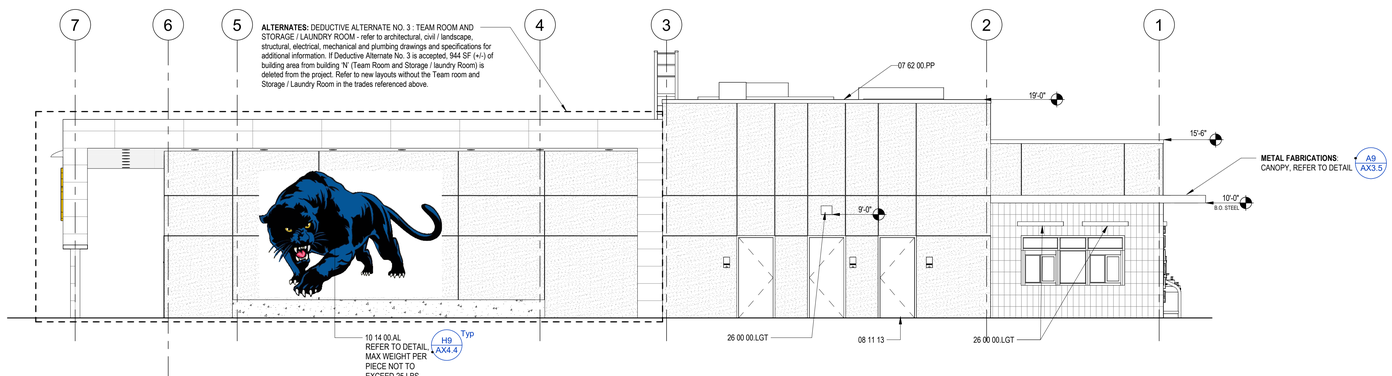

H18 EAST ELEVATION
3/16" = 1'-0"

DEDUCT ALT #3 - EAST ELEVATION



D18 SOUTH ELEVATION
3/16" = 1'-0"

DEDUCT ALT #3 - SOUTH ELEVATION

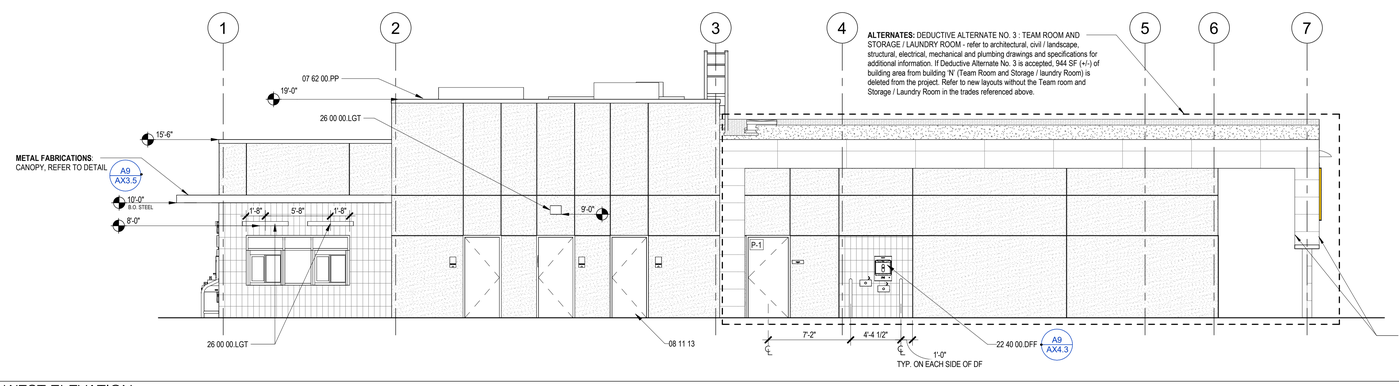

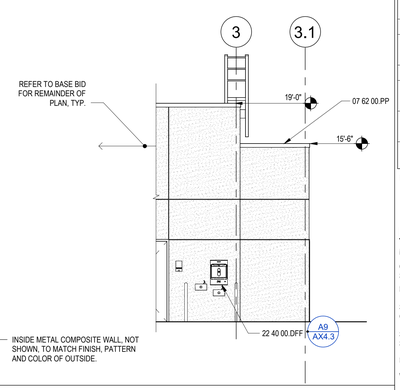

A18 WEST ELEVATION
3/16" = 1'-0"

DEDUCT ALT #3 - WEST ELEVATION

KEYNOTE LEGEND

NUMBER	DESCRIPTION
05 50 00.LDR	[STEEL or ALUMINUM] LADDER
07 62 00.PP	PARAPET CAP
08 11 13	HOLLOW METAL DOORS AND FRAMES
10 14 00.AL	ALUMINUM 3D LOGO
10 14 00.DIM	DIMENSIONAL LETTERS
10 14 00.IPCL	ILLUMINATED PAN CHANNEL LETTERS
22 40 00.DFF	HI-LO DRINKING FOUNTAIN WITH WATER BOTTLE FILLER, REFER TO PLUMBING
26 00 00.LGT	LIGHTING FIXTURE, REFER TO ELECTRICAL

EXTERIOR MATERIALS LEGEND

09 24 00 TYPE P-1 U.N.O.
CEMENT PLASTER WALL

03 30 00
CAST IN PLACE CONCRETE WALL

07 42 43 TYPE MCM-1
METAL COMPOSITE WALL & SOFFIT PANEL

09 30 00 TYPE T-5 U.N.O.
CERAMIC WALL TILE

07 54 19
PVC ROOFING SYSTEM

GENERAL ELEVATION NOTES

1. ALL BUILDING EXPANSION JOINT TO BE 1" UNLESS NOTED OTHERWISE
2. EXPOSED CONCRETE WALLS, COLUMNS, AND BEAMS SHALL BE RUBBED GROUT FINISH TO ACHIEVE SMOOTH FINISHED PER **SPEC SECTION 01 73 29**
3. FLEXIBLE MEMBRANE FLASHING AT WINDOWS SILLS AND LINTELS SHALL HAVE PRE-FORMED END DAMS
4. DOWNSPOUTS SHALL HAVE 16 GAUGE PRE-FINISHED DOWNSPOUT BOOTS TO 6'-0" ABOVE FINISH GRADE. COLOR SELECTED BY ARCHITECT
5. DOWNSPOUTS AND/OR ROOF DRAINS SHALL BE CONNECTED TO STORM DRAIN SYSTEM UNLESS NOTED OTHERWISE. REFERENCE CIVIL FOR STORM DRAIN CONNECTION DETAILS AND LOCATIONS
6. ALL DETAILS, MATERIAL AND FINISHES SHALL BE CONSIDERED "TYPICAL" FOR ALL SIMILAR CONDITIONS UNLESS NOTED OTHERWISE
7. REFER TO 'EXTERIOR FINISH SCHEDULE' FOR DESIGNATED PAINT TYPES ASSOCIATED TO EACH MATERIAL/FINISH
8. REFER TO **SPEC SECTION 09 90 00 - PAINTING AND COATING** FOR PAINT TYPES AND SYSTEMS
9. REFER TO 'EXTERIOR COLOR SCHEDULE' FOR COLORS
10. CEMENT PLASTERING: CEMENT PLASTER SYSTEM, ACCESSORIES, REFER TO DETAIL H5 AX3.5
11. PLUMBING: RAIN WATER LEADER OVERFLOW, REFER TO DETAIL H14 AX3.4
    SEE PLUMBING DRAWINGS FOR LOCATIONS
12. SHEET METAL: COUNTER FLASHING BOOT, LAP UNDER CEMENT PLASTER, WATER BARRIER AND PARAPET CAP, AND OVER PARAPET WALL FLASHING. REFER TO DETAIL L14 AX3.3, H14 AX3.3, H18 AX3.3

EXTERIOR FINISH NOTES

1. THESE SCHEDULES ARE PROVIDED FOR THE CONVENIENCE OF THE CONTRACTOR. CONTRACTOR IS RESPONSIBLE TO FIELD VERIFY ALL CONDITIONS AND DIMENSIONS PRIOR TO BID AND APPLICATION
2. CEMENT PLASTERING: P-1, UNLESS NOTED OTHERWISE.
   ALL EXTERIOR WALLS AND SOFFIT OUTER WALLS (METAL SIDING, WOOD SIDING, ETC): P-1, U.N.O.
3. BACK OF PARAPET FINISHED AND COLORS SIMILAR TO SOFFIT OUTER WALL U.N.O.
4. PAINT DOWNSPOUTS, COLOR TO MATCH ADJACENT SURFACE COLOR, TYP.
5. SHEET METAL PARAPET CAPS: MATCH SOFFIT OUTER WALL COLOR, U.N.O.
6. SOFFITS: MATCH CORRESPONDING EXTERIOR WALL COLOR, U.N.O.
7. PAINT ALL PIPING, UNWRAPPED DUCTWORK, ELECTRICAL CONDUITS, LOUVERS AND ALL MISCELLANEOUS ITEMS EXPOSED TO VIEW TO MATCH ADJACENT SURFACE COLOR
8. CEMENT PLASTER WALLS PERPENDICULAR TO ELEVATIONS AND NOT SHOWN ELSEWHERE SHALL BE THE SAME COLOR AS FACE PLANE, U.N.O.
9. DO NOT PAINT. PROTECT FROM OVER SPRAYED PAINT ALL FACTORY FINISHED MECHANICAL AND ELECTRICAL EQUIPMENT UNITS, PLATES AND LABELS
10. DO NOT PAINT. PROTECT FROM OVER SPRAYED PAINT ALL FACTORY FINISHED EXTERIOR DEVICES, NOT LIMITED TO HORNS, SPEAKERS, OUTLETS, LIGHT FIXTURES, AND PERMANENT ROOM SIGNS
11. COMPOSITE METAL PANELS, CANOPY SOFFIT: MCM-1
12. HOLLOW METAL WINDOW FRAMES: P-2 U.N.O.
13. HOLLOW METAL DOORS AND CORRESPONDING FRAMES: P-2 U.N.O.
14. CEMENT PLASTER WALL PORTIONS NOT SHOWN ELSEWHERE SHALL BE THE SAME TYPE & COLOR AS FACE PLANE, U.N.O.

EXTERIOR FINISH SCHEDULE:

BUILDING MATERIALS	FINISH	REMARKS
CAST-IN-PLACE CONCRETE: COLUMNS, SEATS WALLS	NATURAL CAST CONCRETE	
STRUCT STEEL & MISC IRON, METAL FABRICATIONS: COLUMNS, BEAMS, LINTELS, BUILDING CANOPIES, SUNSHADES PARAPET SCREENS, LADDERS, ROOF LADDER (CONSIDERED EXPOSED TO VIEW), PIPE RAILS, DOWNSPOUTS AND ALL MISC. ITEMS	E_U-GM-1	1
COMPOSITE WALL PANELS: WALL AND SOFFIT PANELS, ACCESSORIES, GUTTERS, TRIM, FLASHING AND ALL MISC PROFILE CLOSURE / FILLER SHAPES	FF	
SHEET METAL FLASHING & TRIM: ARCHITECTURAL, GUTTERS, DOWNSPOUTS	E_U-GM-1	1
SHEET METAL FLASHING & TRIM:: UTILITY ITEMS	GALVANIZED	
METAL DOORS AND FRAMES: DOORS, PANELS, FRAMES AND LOUVERS	E_U-GM-1	
SERVICE WINDOWS: FRAMES AND ACCESSORIES	FF	
GLASS: INSULATED GLAZING PANELS	FF	
LOUVERS: LOUVER AND FRAMES	E_U-GM-1	
CEMENT PLASTER: CEMENT PLASTER, METAL ACCESSORIES	E_CP-2	
TILE: CERAMIC TILE	FF	
PLUMBING: VENTS THRU ROOF, DRINKING FOUNTAINS	FF	
MECHANICAL: EXHAUST FANS, MECHANICAL UNITS, & MISC. EQUIPMENT	FF	
MECHANICAL: EXPOSED TO VIEW VENT STACKS	FF	
ELECTRICAL: SWITCHBOARDS, TRANSFORMERS, PANELS, LIGHT FIXTURES, FIRE ALARM DEVICES, SPEAKERS	FF	
ELECTRICAL: CONDUITS	E_U-GM-1	1

EXTERIOR PAINT FINISHES:
(REFER TO SPECIFICATION SECTION - PAINTING AND COATING)

E_U-GM-1 = EXTERIOR UN-GALVANIZED METAL SYSTEM 1
E_CP-2 = EXTERIOR FIBER-CEMENT MATERIALS/CEMENT PLASTER SYSTEM 2
FF = FACTORY FINISH

REMARKS:
1 = ALL EXPOSED TO VIEW

EXTERIOR COLOR SCHEDULE:

ELEMENTS	COLOR DESIGNATION	COLOR NAME	MANUFACTURER	COLOR NUMBER
CEMENT PLASTER, METAL ACCESSORIES	P-1	Parlier Stucco Beige	Ro's Precise	VP59-2507
	P-3	Earthy Russet	Ro's Precise	VP59-2508
GUTTER AND FASCIA TRIMS	MCM-1	Custom color to match Pitt (Loyal Royal)	NICHIHA	-
STEEL COLUMNS	P-2	Pitt (Loyal Royal)	Ro's Precise	VP5-2445
COMPOSITE WALL PANELS: WALLS/CANOPY SOFFIT	MCM-1	Custom color to match Pitt (Loyal Royal)	NICHIHA	-
HM WINDOW FRAMES	P-2	Pitt (Loyal Royal)	Ro's Precise	VP5-2445
HM DOORS & CORRESPONDING FRAMES	P-2	Pitt (Loyal Royal)	Ro's Precise	VP5-2445
	P-1	Parlier Stucco Beige	Ro's Precise	VP59-2507
TILE: WALLS	TL-5	Tuscany	Daltile	NH74
	TL-6	Carrara	Daltile	NH33
ALUMINUM SERVING WINDOW FRAME	MT-1	Sapphire Blue	Quikserv	RAL 5003

P-X, MCM-X & TL-X = COLOR DESIGNATION NUMBER

BUILDING ELEMENTS DIAGRAM:

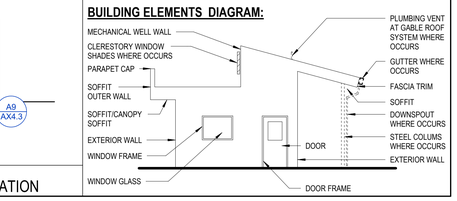

PBK
www.pbk.com
559-448-8400
FRESNO, CA

PARLIER HS STADIUM REPLACEMENT

CLIENT PROJECT NO: 250093
DSA SUBMISSION
DSA APPL. NO.: 02-124002 DSA FILE NO.: 10-H12

PARLIER UNIFIED SCHOOL DISTRICT

LICENSED ARCHITECT
MICHELE GARGANO
No. C-32550
RENEWAL DATE
MAR 31, 2027
STATE OF CALIFORNIA

CLIENT
PARLIER UNIFIED SCHOOL DISTRICT
DATE 2026/02/09
PROJECT NUMBER 250093
DRAWING HISTORY

No.	Description	Date
1	Addendum #1	2026-05-29

CHECKED BY: Checker
DRAWN BY: Author

BUILDING N - EXTERIOR ELEVATIONS

AN4.1

Plot Stamp:
6/23/2026 9:34:12 AM

BUILDING N - BUILDING SECTIONS
AN5.1
FOR BLUEBEAM LABELING/OCR:

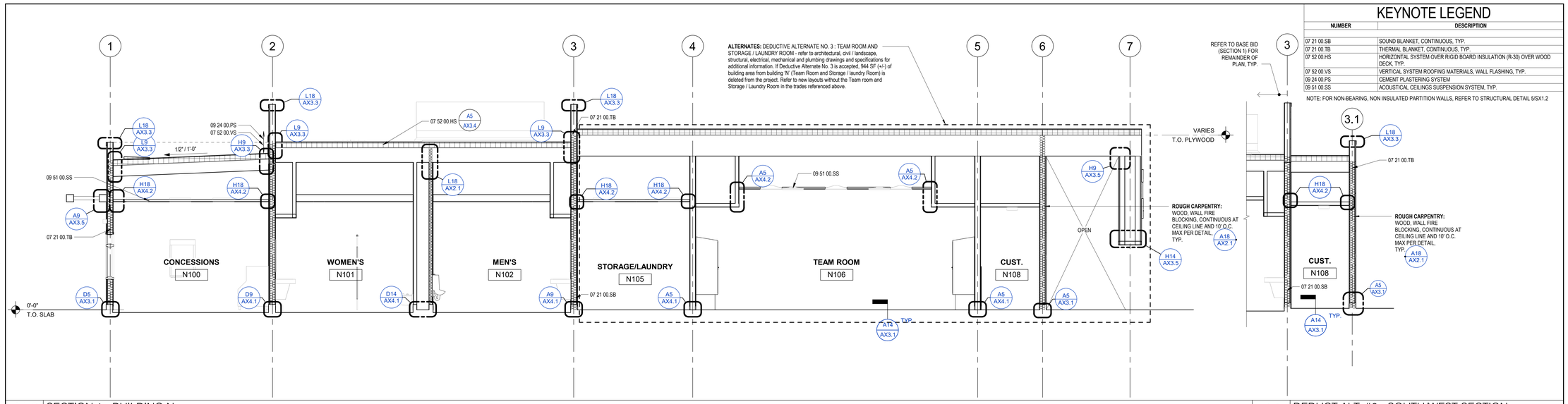

J18 SECTION 1 - BUILDING N
1/4" = 1'-0"

J4 DEDUCT ALT #3 - SOUTH/WEST SECTION
1/4" = 1'-0"

F18 SECTION 2 - BUILDING N
1/4" = 1'-0"

F9 SECTION 3 - BUILDING N
1/4" = 1'-0"

A18 SECTION 4 - BUILDING N
1/4" = 1'-0"

A11 DEDUCT ALT #3 - EAST/WEST SECTION
1/4" = 1'-0"

A7 SECTION 5 - BUILDING N
1/4" = 1'-0"

KEYNOTE LEGEND

NUMBER	DESCRIPTION
07 21 00.SB	SOUND BLANKET, CONTINUOUS, TYP.
07 21 00.TB	THERMAL BLANKET, CONTINUOUS, TYP.
07 52 00.HS	HORIZONTAL SYSTEM OVER RIGID BOARD INSULATION (R-30) OVER WOOD DECK, TYP.
07 52 00.VS	VERTICAL SYSTEM ROOFING MATERIALS, WALL FLASHING, TYP.
09 24 00.PS	CEMENT PLASTERING SYSTEM
09 51 00.SS	ACOUSTICAL CEILINGS SUSPENSION SYSTEM, TYP.

PBK
www.pbk.com
559-448-8400
FRESNO, CA

PARLIER HS STADIUM REPLACEMENT

603 3rd Street
Parlier, CA 93648

CLIENT PROJECT NO.: 250093
DSA SUBMISSION
DSA APPL. NO.: 02-124002 DSA FILE NO.: 10-H12

PARLIER UNIFIED SCHOOL DISTRICT

LICENSED ARCHITECT
MICHELE GARGANO
No. C-32550
RENEWAL DATE
MAR 31, 2027
STATE OF CALIFORNIA

CLIENT
PARLIER UNIFIED SCHOOL DISTRICT

DATE	PROJECT NUMBER
2026/02/09	250093

DRAWING HISTORY

No.	Description	Date

CHECKED BY: Checker
DRAWN BY: Author

BUILDING N - BUILDING SECTIONS

AN5.1

Plot Stamp:
6/23/2026 9:34:14 AM

BUILDING N - INTERIOR ELEVATIONS
AN6.1
FOR BLUEBEAM LABELING/DOCR:

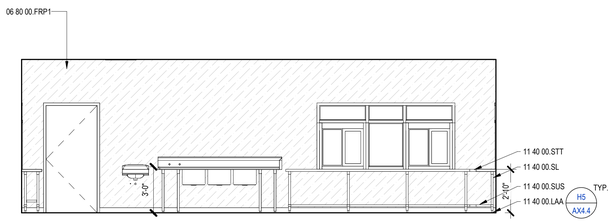

NORTH

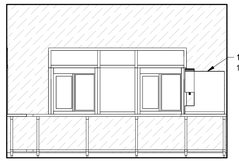

EAST

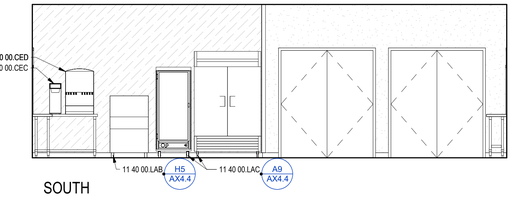

SOUTH

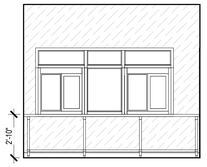

WEST



PARTIAL WEST

N100 CONCESSIONS

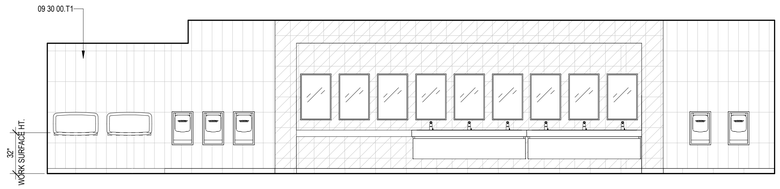

NORTH

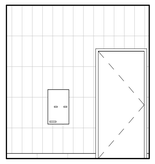

EAST

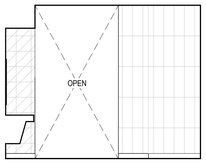

PARITAL EAST

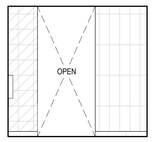

PARTIAL EAST

N101 WOMEN'S

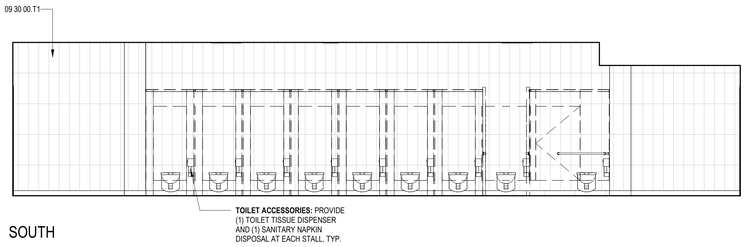

SOUTH

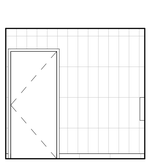

WEST

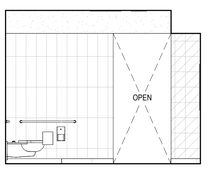

PARTIAL WEST

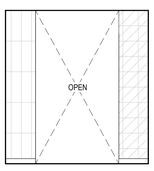

PARTIAL WEST

N101 WOMEN'S

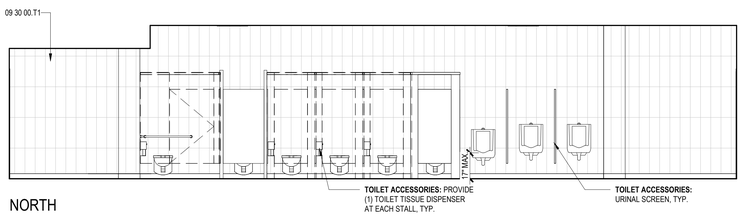

NORTH

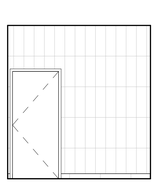

EAST

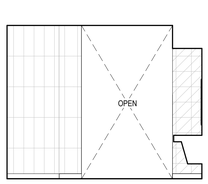

PARTIAL EAST

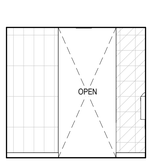

PARTIAL EAST

N102 MEN'S

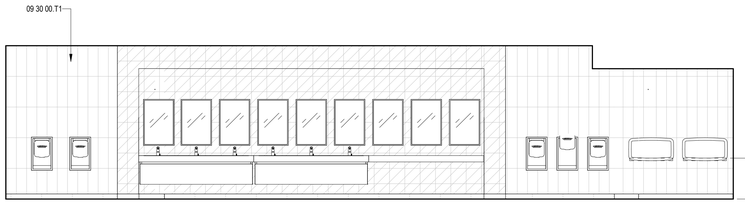

SOUTH

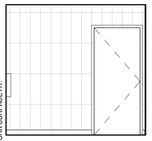

WEST

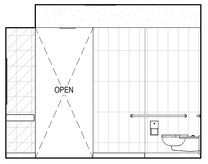

PARTIAL WEST

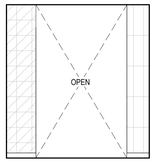

PARTIAL WEST

N102 MEN'S

KEYNOTE LEGEND

NUMBER	DESCRIPTION
06 80 00.FRP1	FIBERGLASS REINFORCED PANELING
09 30 00.T1	TILE TYPE 1 - [DESCRIPTOR]
11 40 00.CEC	COUNTER EQUIPMENT, COFFEE BREWER
11 40 00.CED	COUNTER EQUIPMENT, SODA ICE AND BEVERAGE DISPENSER
11 40 00.LAA	LEG ANCHORAGE - SHEAR (DETAIL "A"), TYP.
11 40 00.LAB	LEG ANCHORAGE - STEAL AND UPLIFT (DETAIL "B"), TYP.
11 40 00.LAC	LEG ANCHORAGE - LOCKING CASTERS, TYP.
11 40 00.SL	SERVING TABLE, LEG, TYP.
11 40 00.STT	SERVING TABLE, TABLE TOP, TYP.
11 40 00.SUS	SERVING TABLE, UNDER SHELF, TYP.

GENERAL NOTES

1. REFER TO REFLECTED CEILING PLAN FOR CEILING AND SOFFIT HEIGHTS.
2. REFER TO SHEET AX6.1 FOR CASEWORK ANCHORAGE DETAILS
3. FOR ELEVATIONS THAT ARE NOT ILLUSTRATED MATCH FINISHES OF TYPICAL ROOM ELEVATION AND REFER TO INTERIOR FINISH SCHEDULE.
4. REFER TO INTERIOR FINISH SCHEDULE TYPICAL PAINT COLORS.
5. ALL EXPOSED METAL DECK AND STRUCTURAL STEEL IS TO COMPLY WITH "ARCHITECTURALLY EXPOSED STRUCTURAL STEEL FRAMING", REFER TO SPECIFICATION.
6. GYPSUM BOARD, METAL ACCESSORIES, REFER TO DETAIL A18 / AX4.2
7. WALL COVERINGS, FRP PANELS, REFER TO DETAIL A14 / AX4.2
8. GYPSUM BOARD ASSEMBLIES: CONTROL JOINT, REFER TO DETAIL H5 / AX4.2
9. PROVIDE BACKING FOR TOILET ACCESSORIES, GRAB BARS REFER TO DETAIL A18 / AX4.3
10. FOR TYP. TOILET PARTITIONS, FLOOR AND WALL ANCHORAGE REFER TO DETAILS H9 / AX4.3, L9 / AX4.3

INTERIOR WALLS LEGEND

P-4 PAINTED GYPSUM BOARD

TL-4 CERAMIC TILE

P-2 PAINTED GYPSUM BOARD

FRP-1 FRP PANELS

TL-1, TL-2, & TL-3 CERAMIC TILE, REFER TO SHEET AX7.1 FOR PATTERN

SYMBOLS LEGEND-INT. ELEVA.

CASEWORK SYMBOL

HEIGHT
MODIFIED
DEPTH
CASEWORK MODEL
LOCK
WIDTH

NOTE: DIMENSIONS ARE TO THE NEAREST WHOLE NUMBER, CONTRACTOR TO FIELD VERIFY DIMENSIONS PRIOR TO FABRICATION

FINISH KEYNOTE SYMBOL

XX-XX = INDICATES FINISH, SEE COLOR SCHEDULE ON

CABINET GROUP NO. REFER TO MODULAR CASEWORK SCHEDULE AND LAB CASEWORK SCHEDULE.

SYMBOL LEGEND

10 **EQUIPMENT NO:** REFER TO EQUIPMENT SCHEDULE.

ELECTRICAL: SPEAKER @ +7' - 6" TO CENTER OF DEVICE, UNLESS NOTED OTHERWISE.

ELECTRICAL: CLOCK @ +7' - 6" TO CENTER OF DEVICE, UNLESS NOTED OTHERWISE.

ELECTRICAL: CLOCK/SPEAKER @ +7' - 6" TO CENTER OF DEVICE, UNLESS NOTED OTHERWISE.

FEC **FIRE PROTECTION SPECIALTIES:** FIRE EXTINGUISHER CABINET, TOP OF CABINET @ +5' - 0" UNLESS NOTED OTHERWISE. PROVIDE FIRE RATED CABINET AT RATED WALLS

TOILET ACCESSORIES: MIRROR, TYP

PLUMBING: WATER CLOSET, SEE PLUMBING

TOILET ACCESSORIES: DIAPER CHANGING STATION, TYP

PLUMBING: LAVATORY, SEE PLUMBING

PLUMBING: URINAL, SEE PLUMBING

PLUMBING: DRINKING FOUNTAIN, SEE PLUMBING A5 / AX4.3

TOILET ACCESSORIES: ELECTRIC HAND DRYER, TYP

PLUMBING: MOP SINK, SEE PLUMBING

TOILET ACCESSORIES: GRAB BAR, TYP

TOILET ACCESSORIES: SANITARY NAPKIN DISPENSER, TYP

TOILET PARTITIONS: FLOOR ANCHORED OVERHEAD BRACE

LMB 5' x 6'

MARKERBOARD & TACKBOARD: FRAMELESS LIQUID MARKERBOARD, LCS ELITE A9 / AX4.2

METAL LOCKERS: KNOCKED-DOWN ATHLETIC LOCKERS

ACOUSTICAL WALL PANELS: ACOUSTICAL PANELS (AP-1 & AP-2) L14 / AX4.3

PBK
FRESNO, CA
559-448-8400
www.pbk.com

PARLIER HS STADIUM REPLACEMENT

603 3rd Street
Parlier, CA 93648

CLIENT PROJECT NO.: 250093
DSA SUBMISSION DSA FILE NO. : 10-H12
DSA APPL. NO. : 02-124002

PARLIER UNIFIED SCHOOL DISTRICT

LICENSED ARCHITECT
MICHELE GARGANO
No. C-32550
RENEWAL DATE
MAR 31, 2027
STATE OF CALIFORNIA

CLIENT	
PARLIER UNIFIED SCHOOL DISTRICT	
DATE	PROJECT NUMBER
2026/02/09	250093

DRAWING HISTORY

No.	Description	Date
2	Addendum #2	2026-05-28

CHECKED BY: Checker
DRAWN BY: Author

BUILDING N - INTERIOR ELEVATIONS

AN6.1

Plot Stamp:
6/23/2026 9:34:19 AM

BUILDING N - INTERIOR ELEVATIONS
AN6.2
FOR BLUEBEAM LABELING/DOOR:

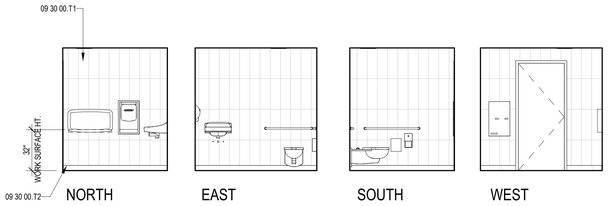

N103 RESTROOM

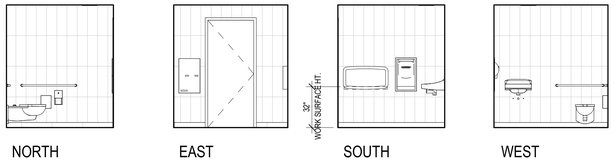

N104 RESTROOM

ALTERNATES: DEDUCTIVE ALTERNATE NO. 3 : TEAM ROOM AND STORAGE / LAUNDRY ROOM - refer to architectural, civil / landscape, structural, electrical, mechanical and plumbing drawings and specifications for additional information. If Deductive Alternate No. 3 is accepted, 944 SF (+/-) of building area from building 'N' (Team Room and Storage / laundry Room) is deleted from the project. Refer to new layouts without the Team room and Storage / Laundry Room in the trades referenced above.

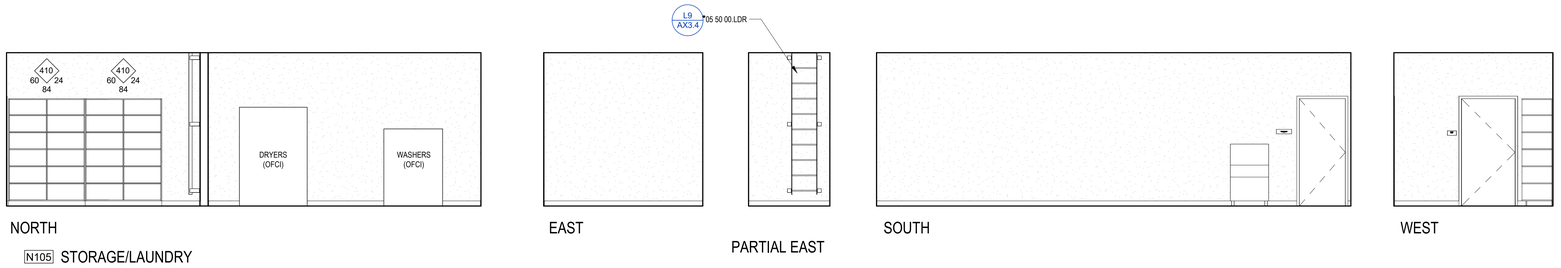

N105 STORAGE/LAUNDRY

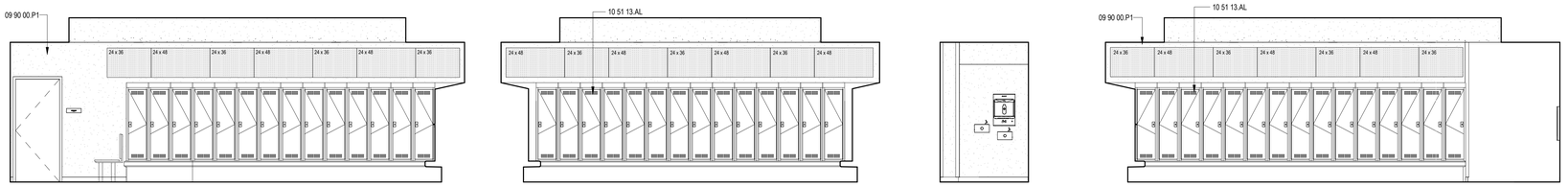

N106 TEAM ROOM

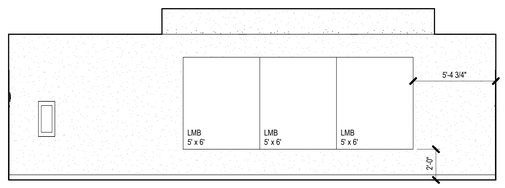

N106 TEAM ROOM

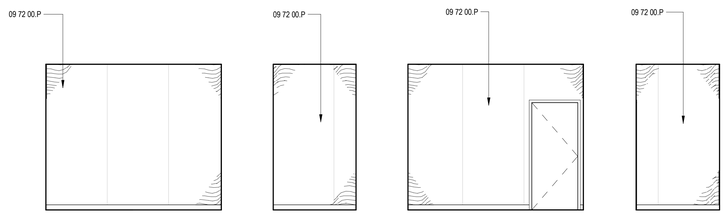

N107 ELECTRICAL/DATA

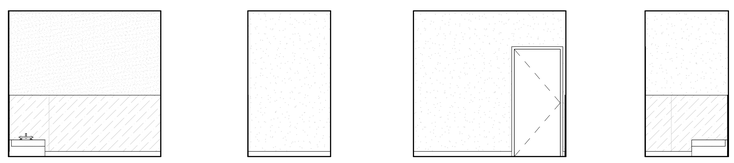

N108 CUST.

KEYNOTE LEGEND

NUMBER	DESCRIPTION
05 50 00.LDR	[STEEL or ALUMINUM] LADDER
09 30 00.T1	TILE TYPE 1 - [DESCRIPTOR]
09 30 00.T2	TILE TYPE 2 - [DESCRIPTOR]
09 72 00.P	3/4" PLYWOOD PANELING WITH A FACE VENEER
09 90 00.P1	PAINT TYPE 1 - [DESCRIPTOR]
10 51 13.AL	METAL LOCKERS[ATHLETIC LOCKERS]

GENERAL NOTES

1. REFER TO REFLECTED CEILING PLAN FOR CEILING AND SOFFIT HEIGHTS.
2. REFER TO SHEET AX6.1 FOR CASEWORK ANCHORAGE DETAILS
3. FOR ELEVATIONS THAT ARE NOT ILLUSTRATED MATCH FINISHES OF TYPICAL ROOM ELEVATION AND REFER TO INTERIOR FINISH SCHEDULE.
4. REFER TO INTERIOR FINISH SCHEDULE TYPICAL PAINT COLORS.
5. ALL EXPOSED METAL DECK AND STRUCTURAL STEEL IS TO COMPLY WITH "ARCHITECTURALLY EXPOSED STRUCTURAL STEEL FRAMING", REFER TO SPECIFICATION.
6. GYPSUM BOARD, METAL ACCESSORIES, REFER TO DETAIL A18 / AX4.2
7. WALL COVERINGS, FRP PANELS, REFER TO DETAIL A14 / AX4.2
8. GYPSUM BOARD ASSEMBLIES: CONTROL JOINT, REFER TO DETAIL H5 / AX4.2
9. PROVIDE BACKING FOR TOILET ACCESSORIES, GRAB BARS REFER TO DETAIL A18 / AX4.3
10. FOR TYP. TOILET PARTITIONS, FLOOR AND WALL ANCHORAGE REFER TO DETAILS H9 / AX4.3 L9 / AX4.3

INTERIOR WALLS LEGEND

- **P-4** PAINTED GYPSUM BOARD
- **TL-4** CERAMIC TILE
- **P-2** PAINTED GYPSUM BOARD
- **FRP-1** FRP PANELS
- **TL-1, TL-2, & TL-3** CERAMIC TILE, REFER TO SHEET AX7.1 FOR PATTERN

SYMBOLS LEGEND-INT. ELEVA.

CASEWORK SYMBOL

HEIGHT
MODIFIED
DEPTH
CASEWORK MODEL
LOCK
WIDTH

NOTE: DIMENSIONS ARE TO THE NEAREST WHOLE NUMBER, CONTRACTOR TO FIELD VERIFY DIMENSIONS PRIOR TO FABRICATION

FINISH KEYNOTE SYMBOL

XX-XX = INDICATES FINISH, SEE COLOR SCHEDULE ON

CABINET GROUP NO. REFER TO MODULAR CASEWORK SCHEDULE AND LAB CASEWORK SCHEDULE.

SYMBOL LEGEND

- **EQUIPMENT NO:** REFER TO EQUIPMENT SCHEDULE.
- **ELECTRICAL:** SPEAKER @ +7' - 6" TO CENTER OF DEVICE, UNLESS NOTED OTHERWISE.
- **ELECTRICAL:** CLOCK @ +7' - 6" TO CENTER OF DEVICE, UNLESS NOTED OTHERWISE.
- **ELECTRICAL:** CLOCK/SPEAKER @ +7' - 6" TO CENTER OF DEVICE, UNLESS NOTED OTHERWISE.
- **FIRE PROTECTION SPECIALTIES:** FIRE EXTINGUISHER CABINET, TOP OF CABINET @ +5' - 0" UNLESS NOTED OTHERWISE. PROVIDE FIRE RATED CABINET AT RATED WALLS
- **TOILET ACCESSORIES:** MIRROR, TYP
- **PLUMBING:** WATER CLOSET, SEE PLUMBING
- **TOILET ACCESSORIES:** DIAPER CHANGING STATION, TYP
- **PLUMBING:** LAVATORY, SEE PLUMBING
- **PLUMBING:** URINAL, SEE PLUMBING
- **PLUMBING:** DRINKING FOUNTAIN, SEE PLUMBING A5 / AX4.3
- **TOILET ACCESSORIES:** ELECTRIC HAND DRYER, TYP
- **PLUMBING:** MOP SINK, SEE PLUMBING
- **TOILET ACCESSORIES:** GRAB BAR, TYP
- **TOILET ACCESSORIES:** SANITARY NAPKIN DISPENSER, TYP
- **TOILET PARTITIONS:** FLOOR ANCHORED OVERHEAD BRACE
- **MARKERBOARD & TACKBOARD:** FRAMELESS LIQUID MARKERBOARD, LCS ELITE A9 / AX4.2
- **METAL LOCKERS:** KNOCKED-DOWN ATHLETIC LOCKERS
- **ACOUSTICAL WALL PANELS:** ACOUSTICAL PANELS (AP-1 & AP-2) L14 / AX4.3

PBK
www.pbk.com
559-448-8400
FRESNO, CA

PARLIER HS STADIUM REPLACEMENT

603 3rd Street
Parlier, CA 93648

CLIENT PROJECT NO.: 250093
DSA SUBMISSION
DSA APPL. NO.: 02-124002 DSA FILE NO.: 10-H12

PARLIER UNIFIED SCHOOL DISTRICT

LICENSED ARCHITECT
MICHELE GARGANO
No. C-32550
RENEWAL DATE
MAR 31, 2027
STATE OF CALIFORNIA

CLIENT	
PARLIER UNIFIED SCHOOL DISTRICT	
DATE	PROJECT NUMBER
2026/02/09	250093

DRAWING HISTORY

No.	Description	Date
2	Addendum #2	2026-05-28

CHECKED BY: Checker
DRAWN BY: Author

BUILDING N - INTERIOR ELEVATIONS

AN6.2

Plot Stamp:
6/23/2026 9:34:23 AM

WALL TYPES & TYP. FRAMING DETAILS AX2.1

FOR BLUEBEAM LABELING/DOOR:

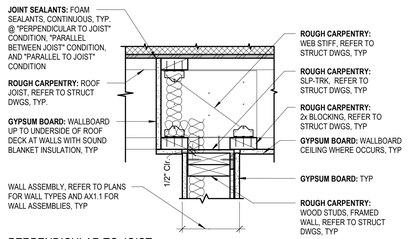

PERPENDICULAR TO JOIST

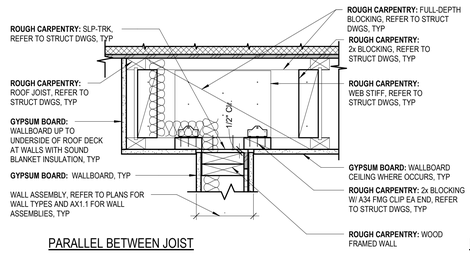

PARALLEL BETWEEN JOIST

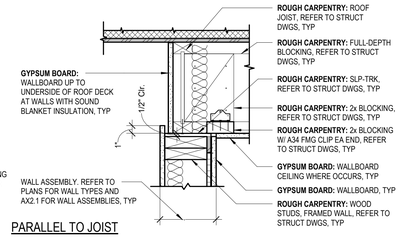

PARALLEL TO JOIST

L18 NON-BEARING, NON RATED WALL TO ROOF JOIST CONDITION (TYP. AT ALL INTERIOR WALLS W/ SOUND BLANKET INSULATION)

1 1/2" = 1'-0"

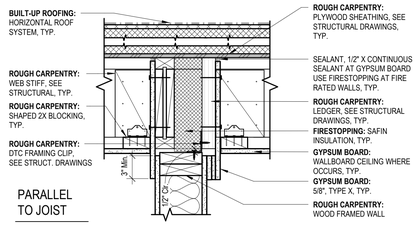

PARALLEL TO JOIST

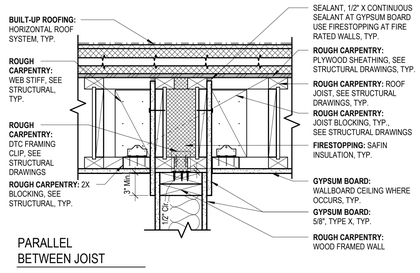

PARALLEL BETWEEN JOIST

F18 NON-BEARING, FIRE RATED WALL TO ROOF JOIST CONDITION

1 1/2" = 1'-0"

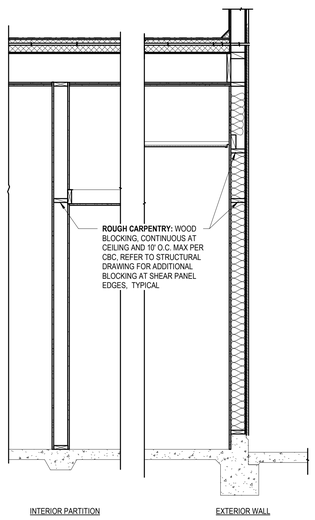

A18 FIRE BLOCKING, WALLS

1/2" = 1'-0"

UL/cUL SYSTEM NO. W-L-1054
METAL PIPE THROUGH 1-HR. OR 2-HR. GYPSUM WALL ASSEMBLY

F-RATING = 1-HR. OR 2-HR.
T-RATING = 0-HR.
L-RATING AT AMBIENT = LESS THAN 1 CFM/SQ. FT.
L-RATING AT 400øF = 4 CFM/SQ. FT.

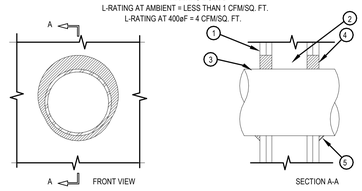

1. GYPSUM WALL ASSEMBLY (UL/cUL CLASSIFIED U300 OR U400 SERIES) (1-HR. OR 2-HR. FIRE-RATING) (2-HR. SHOWN).
2. (NOT SHOWN). WOOD STUDS TO CONSIST OF NOMINAL 2" x 4" LUMBER. STEEL STUDS TO BE MINIMUM 2-1/2" WIDE.
3. PENETRATING ITEM TO BE ONE OF THE FOLLOWING :
   A. MAXIMUM 30" DIAMETER STEEL PIPE (SCHEDULE 10 OR HEAVIER).
   B. MAXIMUM 30" DIAMETER CAST IRON PIPE.
   C. MAXIMUM 6" NOMINAL DIAMETER COPPER PIPE.
   D. MAXIMUM 6" NOMINAL DIAMETER STEEL CONDUIT.
   E. MAXIMUM 4" NOMINAL DIAMETER EMT.
4. HILTI FS-ONE HIGH PERFORMANCE INTUMESCENT FIRESTOP SEALANT :
   A. MINIMUM 5/8", FOR A 1-HR. FIRE-RATING.
   B. MINIMUM 1-1/4" DEPTH, FOR A 2-HR. FIRE-RATING.
5. MINIMUM 1/2" BEAD HILTI FS-ONE HIGH PERFORMANCE INTUMESCENT FIRESTOP SEALANT AT POINT OF CONTACT.

NOTES : 1. MAXIMUM DIAMETER OF OPENING :
A. 32-1/4" FOR STEEL STUD WALLS.
B. 14-1/2" FOR WOOD STUD WALLS.
2. ANNULAR SPACE = MINIMUM 0", MAXIMUM 2-1/4".

H14 FIRESTOPPING, SINGLE PIPE PENETRATION

3" = 1'-0"

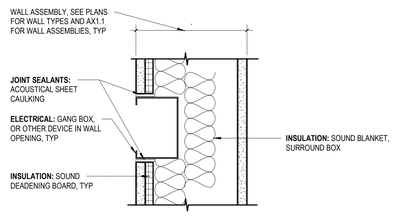

D14 CONTINUOUS SOUND BARRIER AT RECESSED ITEMS

3" = 1'-0"

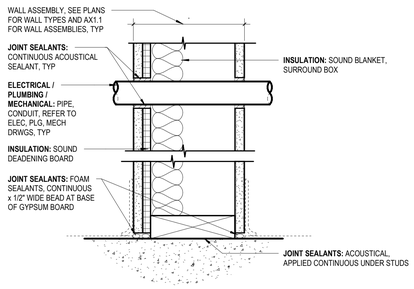

A14 CONTINUOUS SOUND BARRIER AT WALL BASE & PIPE THRU WALL

3" = 1'-0"

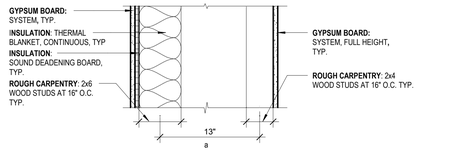

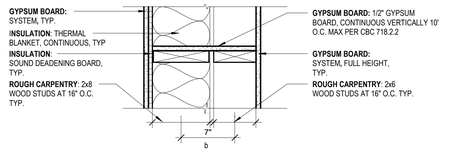

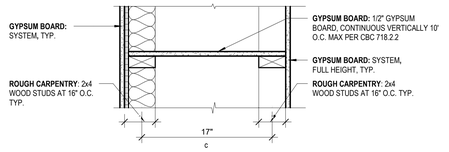

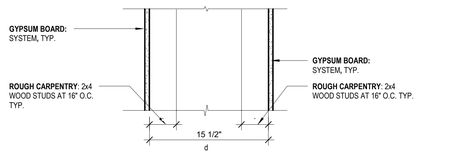

INTERIOR

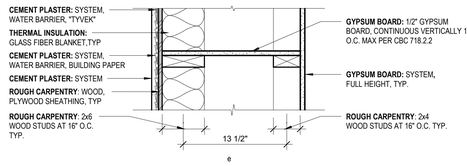

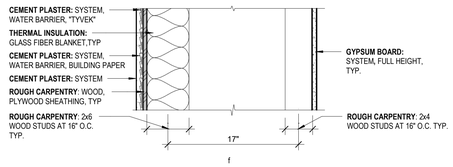

EXTERIOR

A9 SPECIAL WALL ASSEMBLIES (INTERIOR AND EXTERIOR)

1 1/2" = 1'-0"

TYP. WALL ASSEMBLY LEGEND

NOTES:

1. THESE SCHEDULES ARE PROVIDED FOR THE CONVENIENCE OF THE CONTRACTOR, ALL CONDITIONS AND DIMENSIONS SHALL BE FIELD VERIFIED PRIOR TO ANY FABRICATION.
2. THE INTENT OF THESE SCHEDULES IS TO INDICATE THE VARIOUS LAYERS OF MATERIALS WHICH COMPRISE THE DIFFERENT WALL ASSEMBLIES.
3. REFER TO THE EXTERIOR ELEVATIONS AND EXTERIOR FINISH SCHEDULE FOR ADDITIONAL WALL COVERING AND FOR MATERIAL FINISHES.
4. REFER TO THE INTERIOR ELEVATIONS AND INTERIOR FINISH SCHEDULE FOR ADDITIONAL WALL COVERINGS AND FOR MATERIAL FINISHES.
5. WHERE CERAMIC TILE SYSTEM ARE DESIGNATED, REFER TO THE FINISH SCHEDULE AND SPECIFICATION SECTION FOR THE APPROPRIATE CERAMIC TILE SYSTEM.
6. PROVIDE A CONTINUOUS THERMAL BLANKET INSULATION AT ALL WALLS DESIGNATED AS EXTERIOR WALLS. REFER TO THE SPECIFICATION SECTION FOR THE INSULATION TYPE AND LOCATION FOR INSTALLATION.
7. PROVIDE A CONTINUOUS SOUND BLANKET AT WALLS DESIGNATED AS INTERIOR WALLS WHERE INSULATION IS INDICATED AS PART OF THE ASSEMBLY.
8. REFER TO FLOOR PLANS FOR TYPICAL AND SPECIAL WALL ASSEMBLIES REFERENCES.
9. CONSTRUCT WALLS PER TYPICAL AND SPECIAL WALL ASSEMBLIES. NOTE THE DETAILS REFERENCED, SHOW TYPICAL SINGLE STUD CONSTRUCTION. CONSTRUCT SPECIAL WALL ASSEMBLIES SIMILARLY.
10. CONTINUOUS SOUND BARRIER AT RECESSED ITEMS, REFER TO DETAIL D14 / AX2.1
11. CONTINUOUS SOUND BARRIER AT WALL BASE AND PIPE/CONDUIT THRU WALL, REFER TO DETAIL A14 / AX2.1
12. PROVIDE FIRE BLOCKING AT ALL WALLS PER DETAIL A18 / AX2.1 TYP.
13. FIRE RATED WALLS.
    A. REFER TO FLOOR PLANS FOR FIRE RESISTIVE RATING OF TYPICAL WALL ASSEMBLIES AND SPECIAL WALL ASSEMBLIES.
    B. FIRE RESISTIVE CONSTRUCTION SHALL TAKE PRECEDENCE OVER SOUND WALL CONSTRUCTION.
    C. FOR SEALING PENETRATIONS THROUGH FIRE-RATED WALLS REFER TO DETAIL H14 / AX2.1
    D. NON-BEARING WALLS:
       1) CONNECTION TO ROOF DECKS, REFER TO DETAIL F18 / AX2.1
    E. GYPSUM BOARD, FIRE RATED WALL SIGNAGE, PROVIDE 3" HIGH STENCILED LETTERS BOTH SIDES OF THE WALL ABOVE CEILING LINE TO IDENTIFY THE WALL TYPE PER SPECIFICATIONS SECTION 09 29 00, 3.7, H-1

UL FIRE RESISTIVE DESIGN U-4XX = REFER TO UNDERWRITERS LABORATORIES FIRE RESISTANCE DIRECTORY FOR FIRE RESISTIVE STANDARDS AND NOTES.

WALL ASSEMBLY SYMBOLS:

WALL ASSEMBLY MARK — X-# — NOMINAL STUD DEPTH

STUD DEPTHS: NOMINAL		ACTUAL
4	=	3 1/2"
6	=	5 1/2"
8	=	7 1/4"
10	=	9 1/4"
S	=	VARIES: SPECIAL WALL ASSEMBLIES. RESERVED FOR SPECIAL CONSTRUCTION, I.E., MULTI STUD ASSEMBLIES, REFER TO SPECIAL WALL ASSEMBLY DETAILS

WALL ASSEMBLIES: MARK		
X'-#	=	EXTERIOR WALL ASSEMBLIES, REFER TO DETAIL D5 / AX2.1
X-#	=	INTERIOR WALL ASSEMBLIES, REFER TO DETAIL A5 / AX2.1
x-#	=	SPECIAL WALL ASSEMBLIES, REFER TO DETAIL A9 / AX2.1

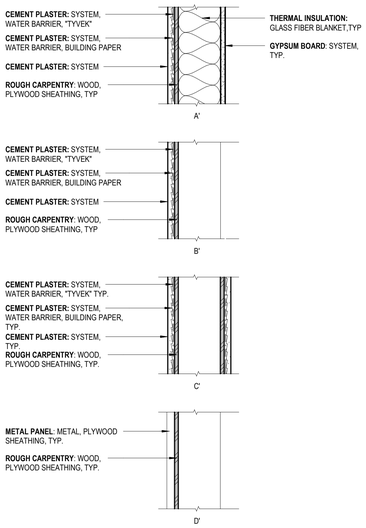

D5 EXTERIOR WALL ASSEMBLIES

1 1/2" = 1'-0"

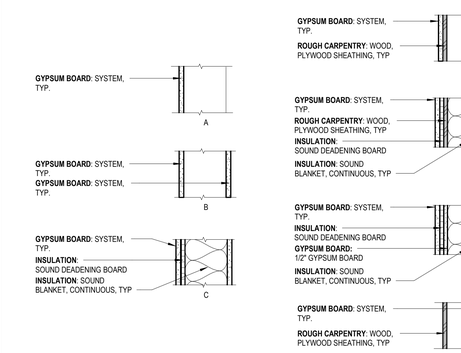

A5 INTERIOR WALL ASSEMBLIES

1 1/2" = 1'-0"

PARLIER HS STADIUM REPLACEMENT

603 3rd Street
Parlier, CA 93648

CLIENT PROJECT NO: 250093

DSA SUBMISSION

DSA APPL. NO.: 02-124002 DSA FILE NO.: 10-H12

www.pbk.com
559-448-8400
FRESNO, CA

PARLIER UNIFIED SCHOOL DISTRICT

MICHELE GARGANO
No. C-32500
RENEWAL DATE
MAR 31, 2027
LICENSED ARCHITECT
STATE OF CALIFORNIA

CLIENT
PARLIER UNIFIED SCHOOL DISTRICT

DATE	PROJECT NUMBER
2026/02/09	250093

DRAWING HISTORY

No.	Description	Date

CHECKED BY: Checker

DRAWN BY: Author

WALL TYPES & TYP. FRAMING DETAILS

AX2.1

Plot Stamp:
6/23/2026 9:34:24 AM

EXTERIOR DETAILS
AX3.1
FOR BLUEBEAM LABELING/OCR:

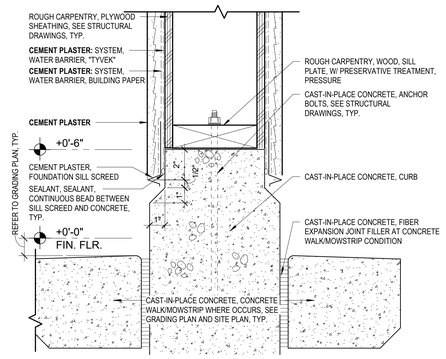

L9 EXT. WALL SILL @ CONC. CURB
3" = 1'-0"

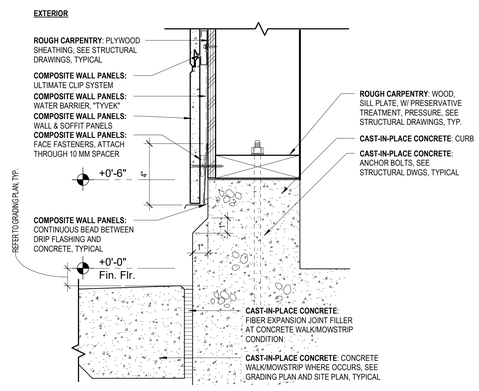

L5 EXT. WALL SILL/CONC. CURB @ SPECIAL WALL
3" = 1'-0"

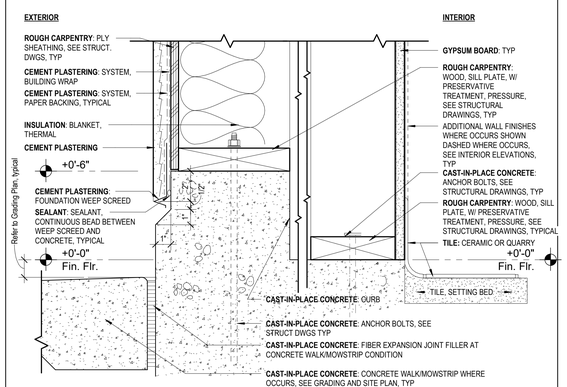

H9 EXT. WALL SILL/CONC. CURB @ SPECIAL
3" = 1'-0"

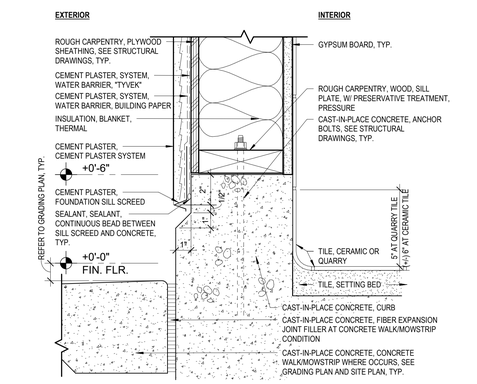

H5 EXT. WALL SILL @ CONC. CURB
3" = 1'-0"

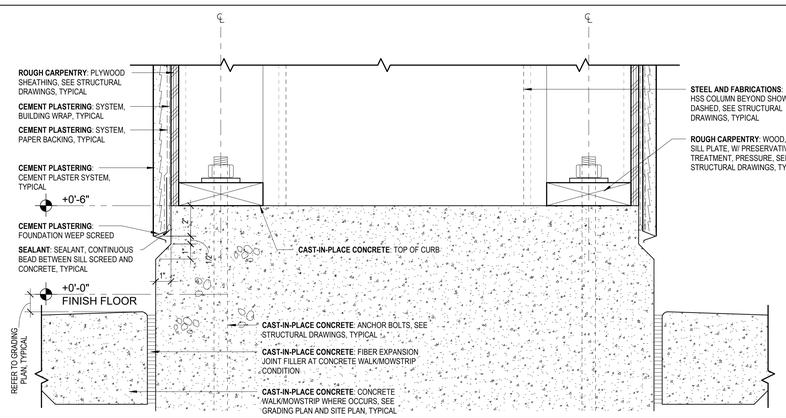

D18 EXT. WALL CONDITION @ FIN WALL
3" = 1'-0"

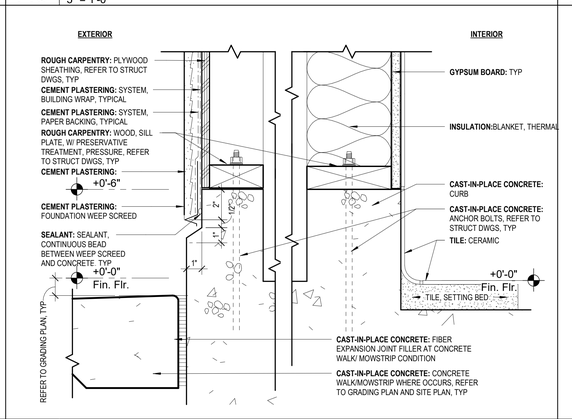

D9 EXT. WALL CONDITION @ TOILET ROOM
3" = 1'-0"

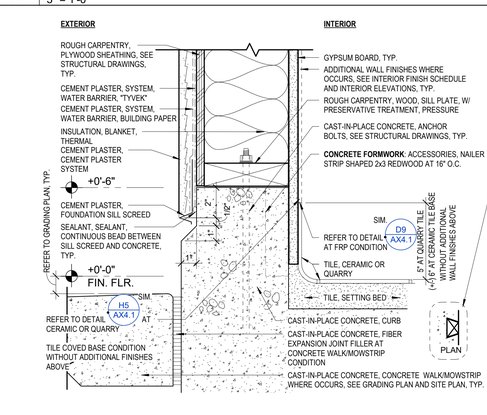

D5 EXT. WALL SILL @ CONC. CURB
3" = 1'-0"

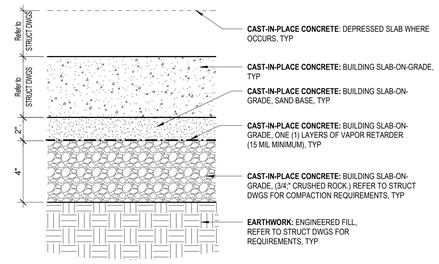

A14 BUILDING SLAB ON GRADE
3" = 1'-0"

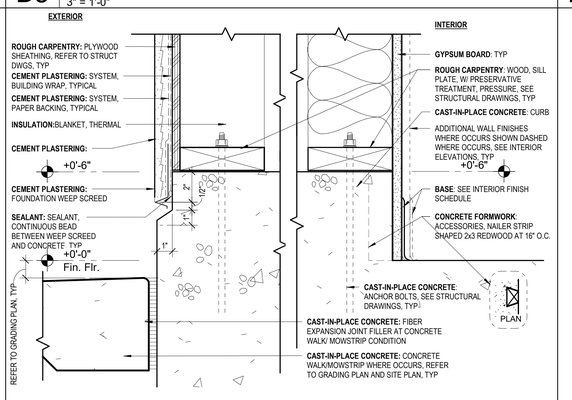

A9 EXT. WALL CONDITION @ COLUMN
3" = 1'-0"

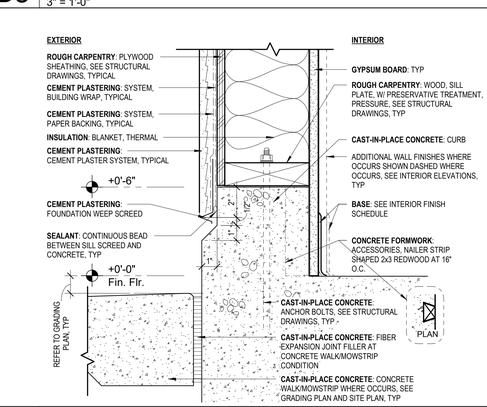

A5 EXT. WALL SILL @ CONC. CURB
3" = 1'-0"

PBK
603 3rd Street
Parlier, CA 93648
www.pbk.com
559-448-8400
FRESNO, CA

PARLIER HS STADIUM REPLACEMENT

CLIENT PROJECT NO: 250093
DSA SUBMISSION
DSA APPL. NO. : 02-124002 DSA FILE NO. : 10-H12

PARLIER UNIFIED SCHOOL DISTRICT

LICENSED ARCHITECT
MICHELE GARGANO
No. C-32950
RENEWAL DATE
MAR 31, 2027
STATE OF CALIFORNIA

CLIENT
PARLIER UNIFIED SCHOOL DISTRICT

DATE	PROJECT NUMBER
2026/02/09	250093

DRAWING HISTORY

No.	Description	Date
3	Addendum #3	2026-06-09
5	DSA Comments, DWG V2	2026-06-25

CHECKED BY: Checker
DRAWN BY: Author

EXTERIOR DETAILS

AX3.1

Plot Stamp:
6/23/2026 9:34:25 AM

EXTERIOR DETAILS
AX3.2
FOR BLUEBEAM LABELING/OCR:

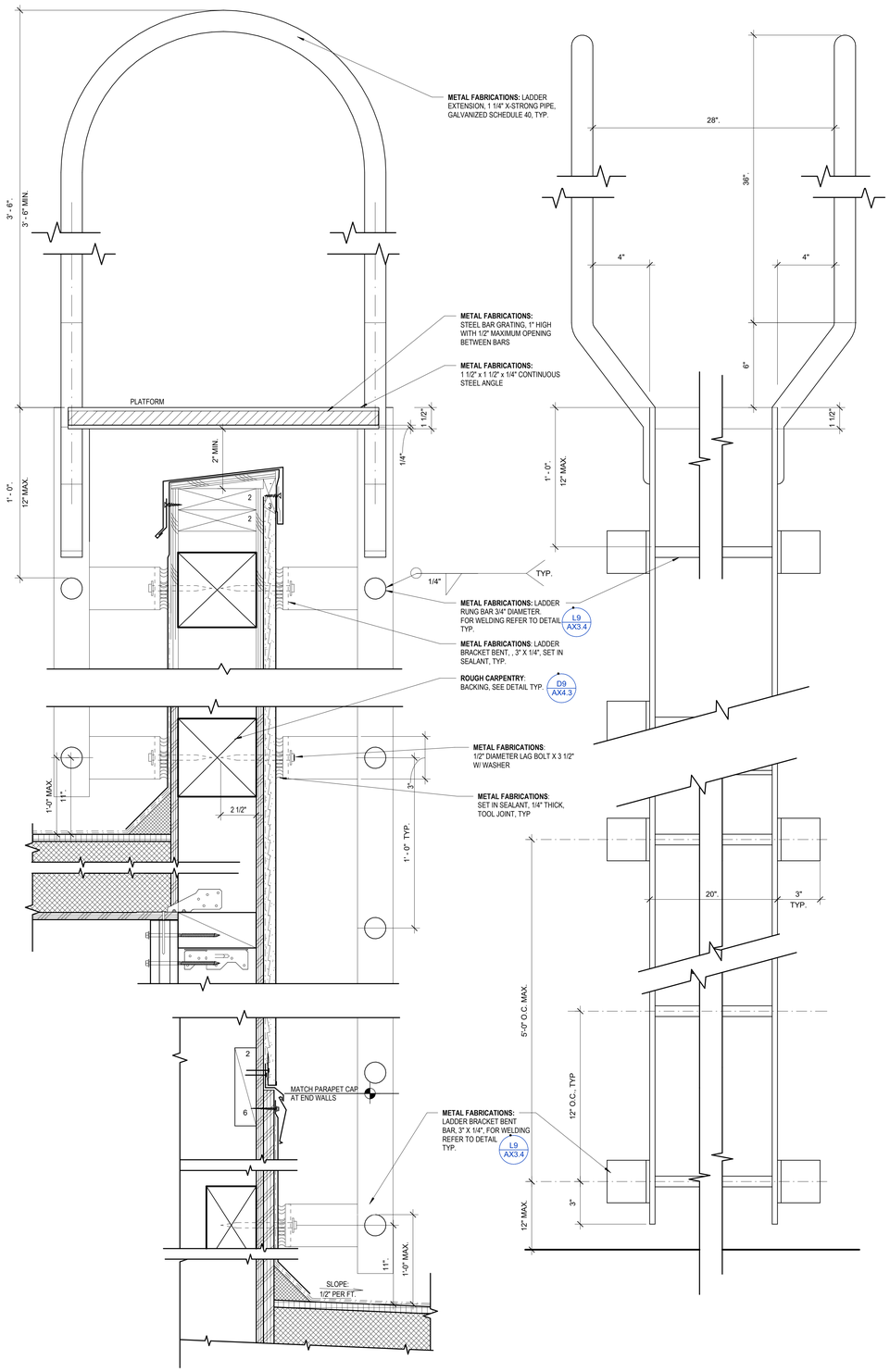

SECTION **ELEVATION**

NOTE: GALVANIZE LADDER AFTER FABRICATION

A18 METAL FABRICATION, STEEL LADDER @ ROOF
3" = 1'-0"

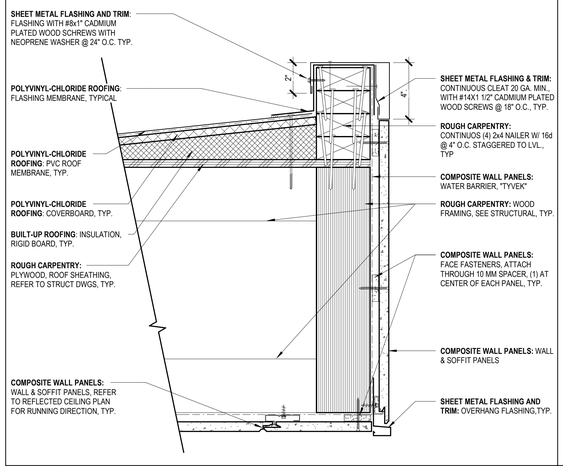

H9 CANOPY RAKE
3" = 1'-0"

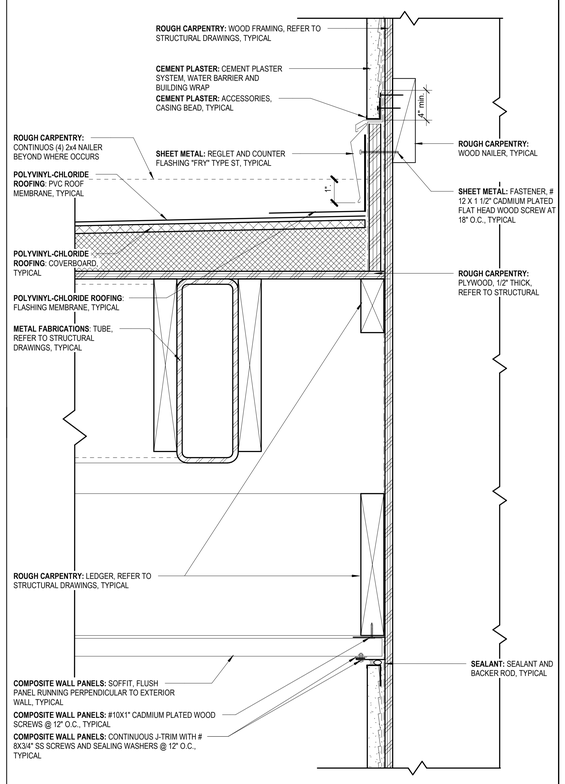

A5 CANOPY TO WALL CONDITION
3" = 1'-0"

PBK
FRESNO, CA
559-448-8400
www.pbk.com

PARLIER HS STADIUM REPLACEMENT

603 3rd Street
Parlier, CA 93648

CLIENT PROJECT NO: 250093

DSA SUBMISSION

DSA APPL. NO. : 02-124002 DSA FILE NO. : 10-H12

PARLIER UNIFIED SCHOOL DISTRICT

LICENSED ARCHITECT
MICHELE GARGANO
No. C-32593
RENEWAL DATE
MAR 31, 2027
STATE OF CALIFORNIA

CLIENT
PARLIER UNIFIED SCHOOL DISTRICT

DATE	PROJECT NUMBER
2026/02/09	250093

DRAWING HISTORY

No.	Description	Date

CHECKED BY: Checker

DRAWN BY: Author

EXTERIOR DETAILS

AX3.2

Plot Stamp:
6/23/2026 9:34:26 AM

EXTERIOR DETAILS
AX3.3
FOR BLUEBEAM LABELING/DOOR:

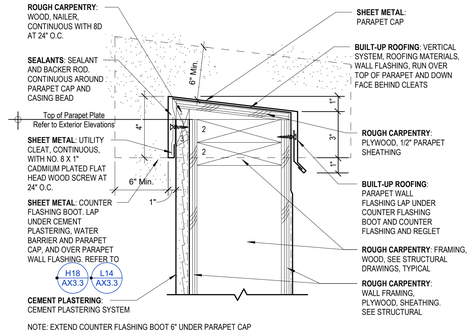

NOTE: EXTEND COUNTER FLASHING BOOT 6" UNDER PARAPET CAP

L18 PARAPET CAP
3" = 1'-0"

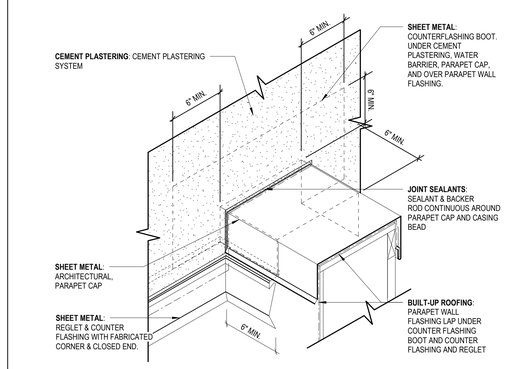

L14 COUNTER FLASHING BOOT - PARAPET T TO WALL
3" = 1'-0"

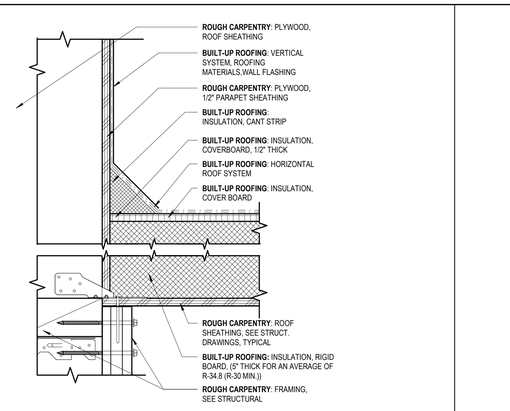

L9 ROOF TO WALL CONDITION
3" = 1'-0"

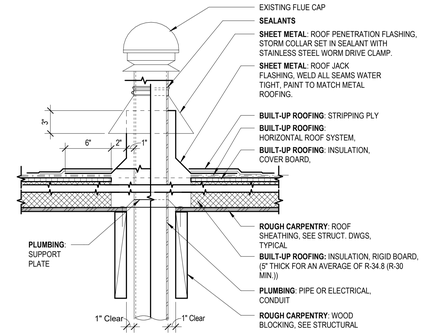

L5 FLUE PIPE ROOF PENETRATION
1 1/2" = 1'-0"

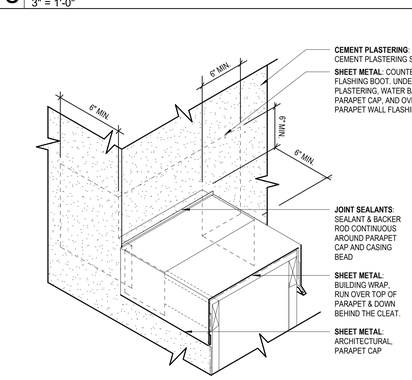

H18 COUNTER FLASHING BOOT - PARAPET TO WALL
3" = 1'-0"

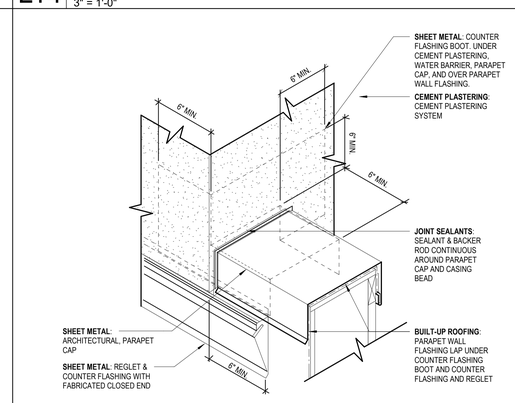

H14 COUNTER FLASHING BOOT - PARAPET TO WALL
3" = 1'-0"

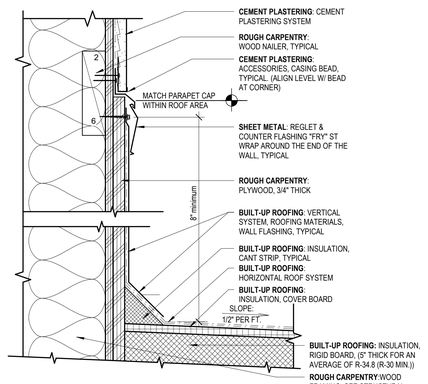

H9 REGLET @ BUR WALL FLSHING
3" = 1'-0"

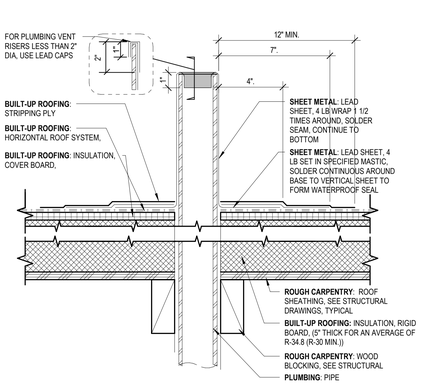

H5 PLUMBING VENT RISER
3" = 1'-0"

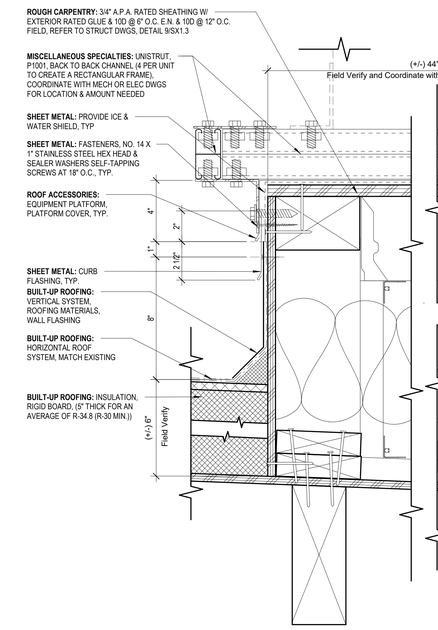

A18 EQUIPMENT PLATFORM
3" = 1'-0"

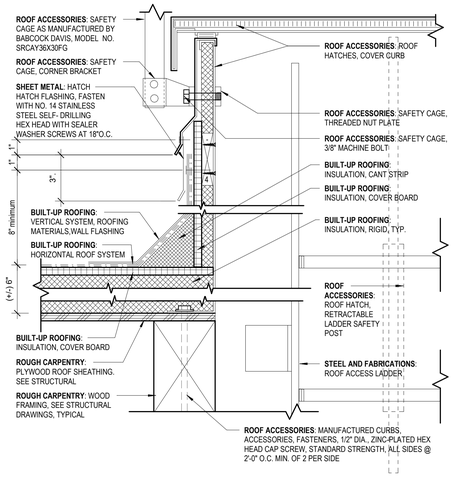

A9 ROOF HATCH
3" = 1'-0"

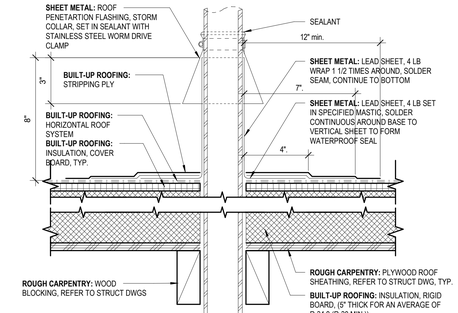

D5 TALL PIPE ROOF PENETRATION @ BUR
3" = 1'-0"

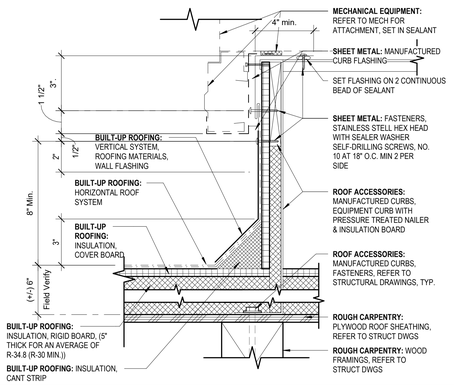

A5 EQUIPMENT CURB @ BUILT-UP ROOFING
3" = 1'-0"

Plot Stamp:
6/23/2026 9:34:27 AM

PBK
FRESNO, CA
559-448-8400
www.pbk.com

PARLIER HS STADIUM REPLACEMENT
603 3rd Street
Parlier, CA 93648

CLIENT PROJECT NO: 250093
DSA SUBMISSION
DSA APPL. NO. : 02-124002 DSA FILE NO. : 10-H12

PARLIER UNIFIED SCHOOL DISTRICT

LICENSED ARCHITECT
MICHELE GARGANO
No. C-32593
RENEWAL DATE
MAR 31, 2027
STATE OF CALIFORNIA

CLIENT
PARLIER UNIFIED SCHOOL DISTRICT

DATE	PROJECT NUMBER
2026/02/09	250093

DRAWING HISTORY

No.	Description	Date
5	DSA Comments, DWG V2	2026-06-25

CHECKED BY: Checker
DRAWN BY: Author

EXTERIOR DETAILS

AX3.3

EXTERIOR DETAILS
AX3.4

FOR BLUEBEAM LABELING/OCR:

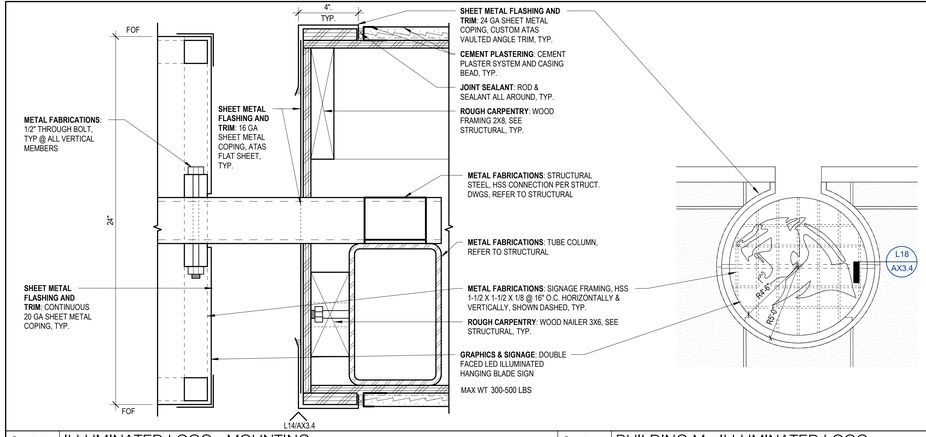

L18 ILLUMINATED LOGO - MOUNTING
3" = 1'-0"

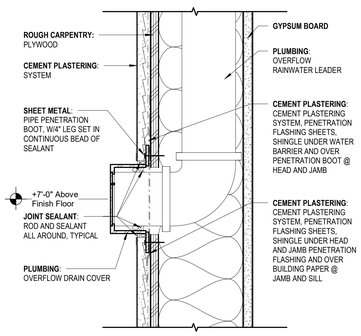

H14 PLUMBING, RAINWATER OVERFLOW LEADER @ CEMENT PLASTER
3" = 1'-0"

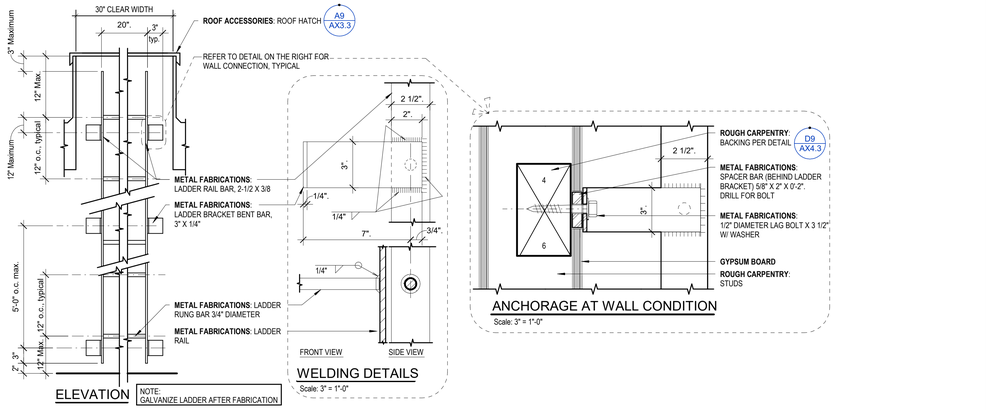

L9 STEEL AND FABRICATIONS, ACCESS LADDER DETAILS
1" = 1'-0"

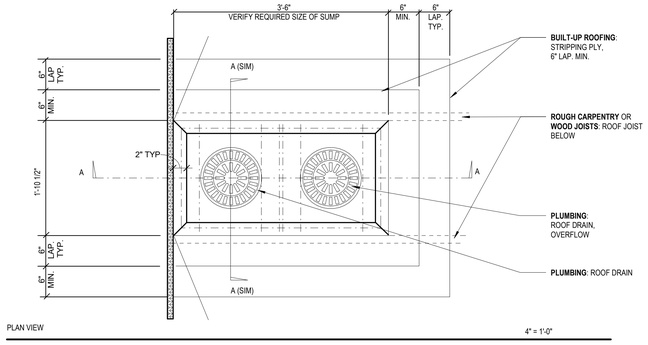

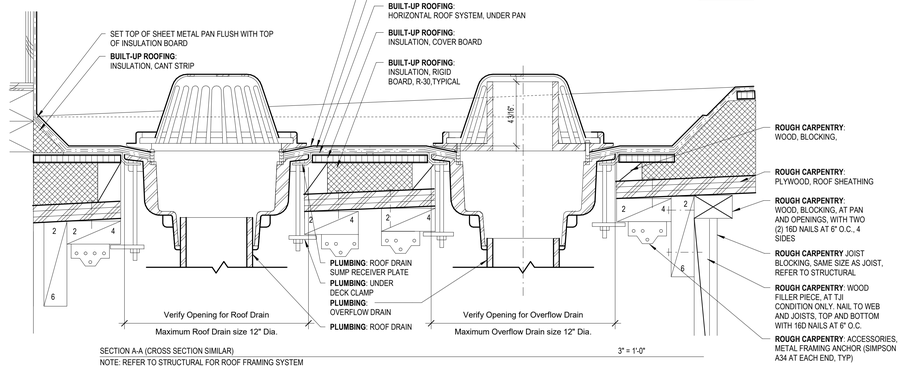

GRAPHIC LEGEND:

X / X — ROUGH CARPENTRY: BLOCKING MEMBER SIZE, TYP

D9 SHEET METAL, ROOF DRAIN AND OVERFLOW
3" = 1'-0"

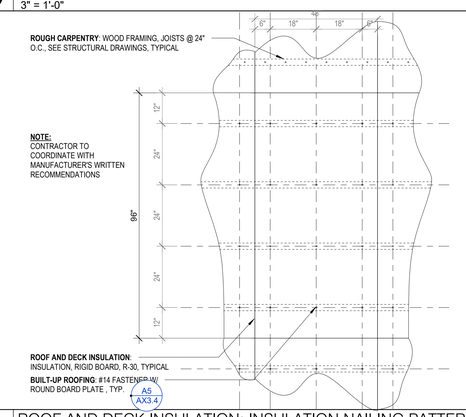

A9 ROOF AND DECK INSULATION: INSULATION NAILING PATTERN
1/2" = 1'-0"

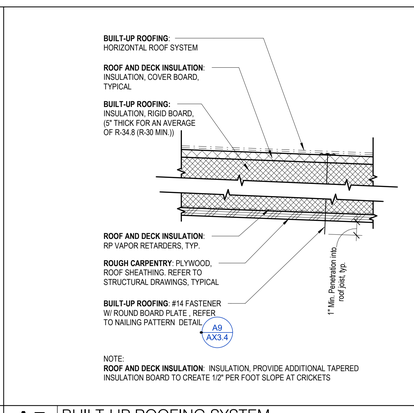

A5 BUILT-UP ROOFING SYSTEM
3" = 1'-0"

PBK
www.pbk.com
559-448-8400
FRESNO, CA

PARLIER HS STADIUM REPLACEMENT
603 3rd Street
Parlier, CA 93648

CLIENT PROJECT NO: 250093
DSA SUBMISSION
DSA APPL. NO.: 02-124002 DSA FILE NO.: 10-H12

PARLIER UNIFIED SCHOOL DISTRICT

LICENSED ARCHITECT
MICHELE GARGANO
No. C-32550
RENEWAL DATE: MAR 31, 2027
STATE OF CALIFORNIA

CLIENT
PARLIER UNIFIED SCHOOL DISTRICT

DATE	PROJECT NUMBER
2026/02/09	250093

DRAWING HISTORY

No.	Description	Date
1	Addendum #1	2026-05-29
4	Addendum #4	2026-06-12

CHECKED BY: Checker

DRAWN BY: Author

EXTERIOR DETAILS

AX3.4

Plot Stamp:
6/23/2026 9:34:28 AM

EXTERIOR DETAILS
AX3.5
FOR BLUEBEAM LABELING/OCR:

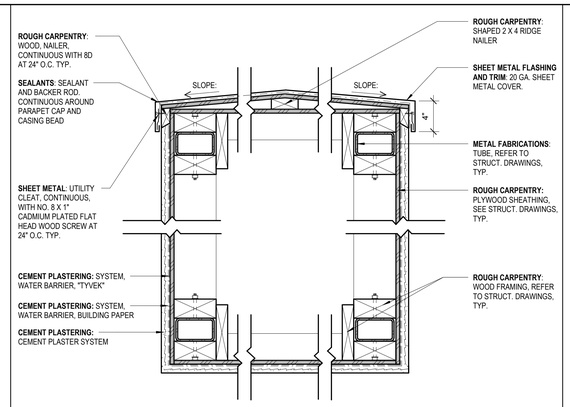

L14 SHEET METAL COVER
1 1/2" = 1'-0"

Code Compliance Research Report: CCRR-0299
Product: AWP 1818

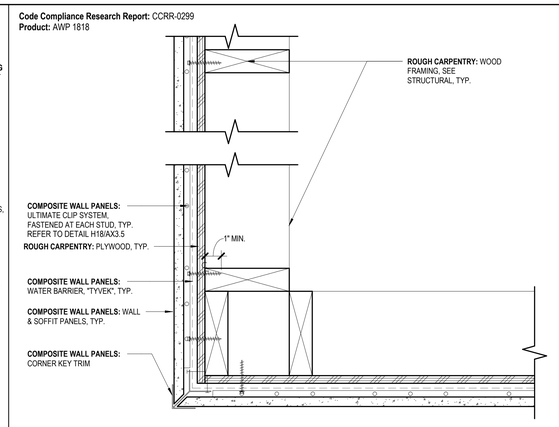

L9 COMPOSITE WALL PANELS, OUTSIDE CORNER, PLAN VIEW
3" = 1'-0"

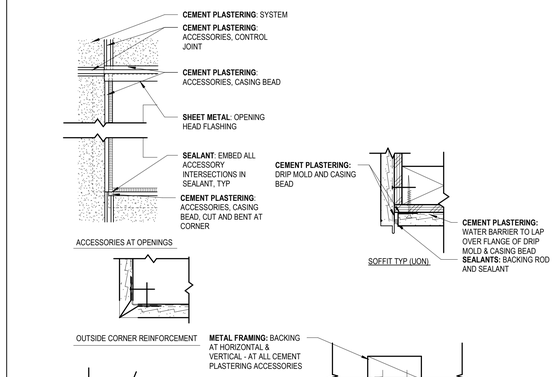

H5 CEMENT PLASTER , ACCESORIES
3" = 1'-0"

Code Compliance Research Report: CCRR-0299
Product: AWP 1818

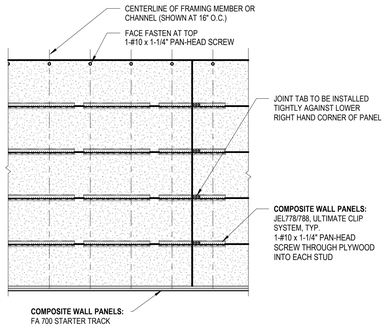

H18 ELEVATION - CLIP LAYOUT
1/2" = 1'-0"

Code Compliance Research Report: CCRR-0299
Product: AWP 1818

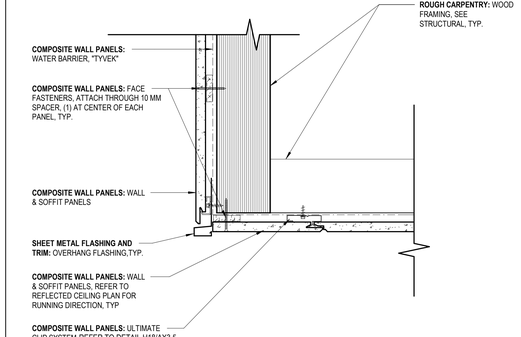

H14 CANOPY, SOFFIT
3" = 1'-0"

Code Compliance Research Report: CCRR-0299
Product: AWP 1818

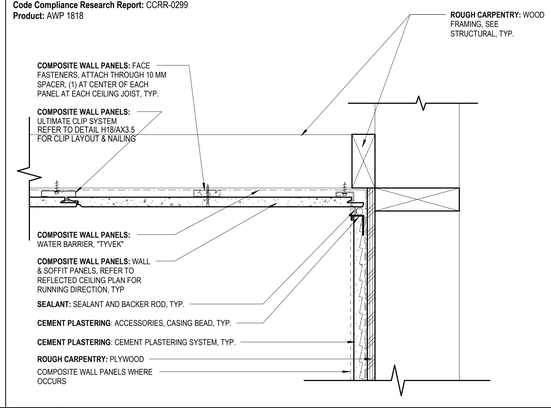

H9 CANOPY, SOFFIT TO CEMENT PLASTER TRANSITION
3" = 1'-0"

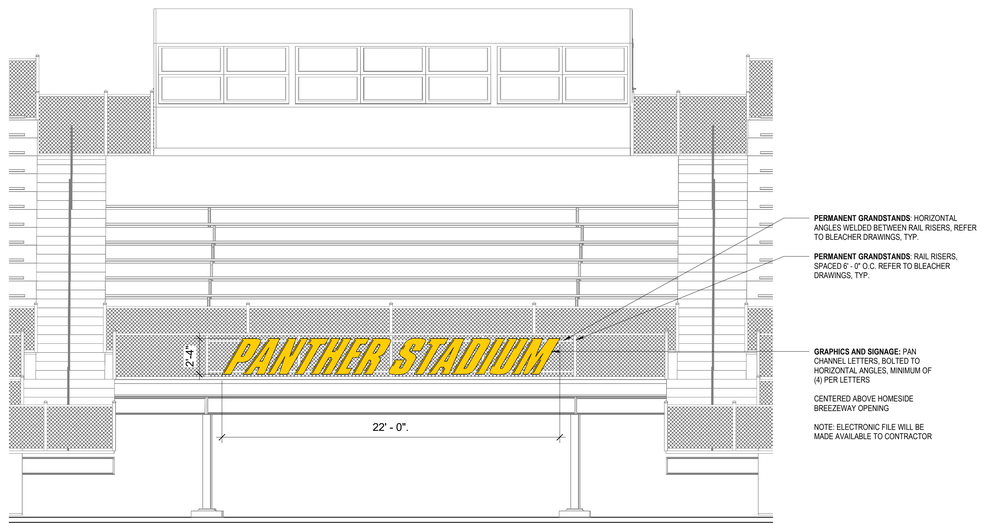

A18 BLEACHERS - PAN CHANEL GRAPHICS
1/4" = 1'-0"

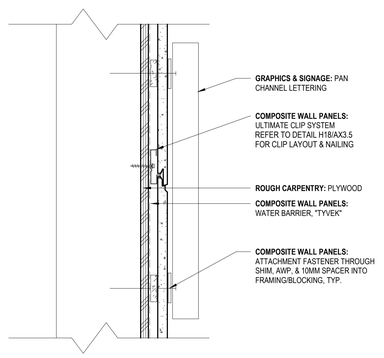

D9 SIGN ATTACHMENT @ COMPOSITE WALL PANELS
3" = 1'-0"

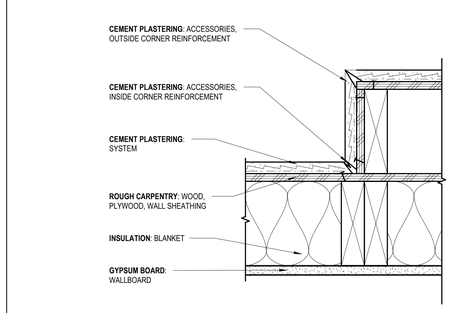

D5 EXT. WALL CORNER DTL
3" = 1'-0"

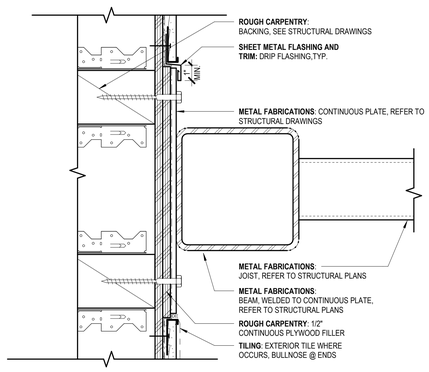

A9 SNACK BAR CANOPY
3" = 1'-0"

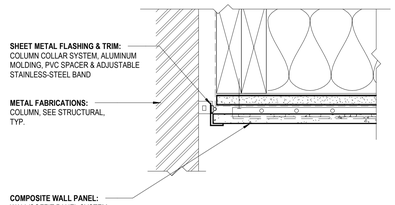

A5 COLUMN COLLAR
3" = 1'-0"

PBK
www.pbk.com
559-448-8400
FRESNO, CA

PARLIER HS STADIUM REPLACEMENT

603 3rd Street
Parlier, CA 93648

CLIENT PROJECT NO: 250093
DSA SUBMISSION
DSA APPL. NO. : 02-124002 DSA FILE NO. : 10-H12

PARLIER UNIFIED SCHOOL DISTRICT

LICENSED ARCHITECT
MICHELE GARGANO
No. C-32890
RENEWAL DATE
MAR 31, 2027
STATE OF CALIFORNIA

CLIENT
PARLIER UNIFIED SCHOOL DISTRICT

DATE	PROJECT NUMBER
2026/02/09	250093

DRAWING HISTORY

No.	Description	Date
1	Addendum #1	2026-05-29
5	DSA Comments, DWG V2	2026-06-25

CHECKED BY: Checker
DRAWN BY: Author

EXTERIOR DETAILS

AX3.5

Plot Stamp:
6/23/2026 9:34:43 AM

INTERIOR DETAILS
AX4.1
FOR BLUEBEAM LABELING/OCR:

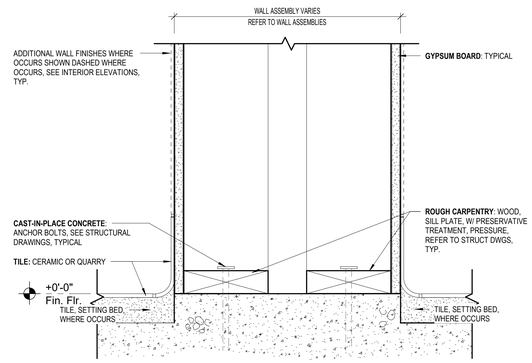

L9 INTERIOR WALL SILL
3" = 1'-0"

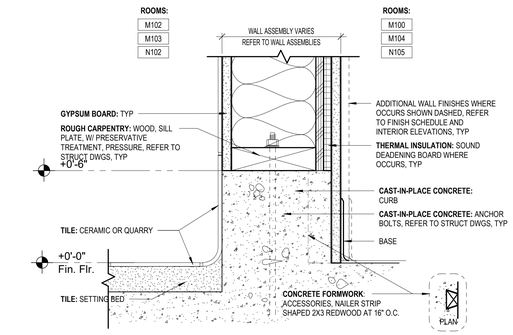

L5 INT. WALL SILL @ CONCRETE CURB
3" = 1'-0"

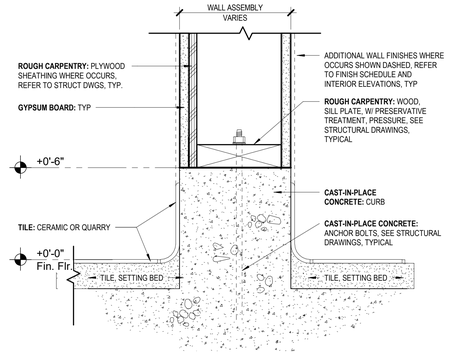

H9 INT. WALL SILL @ CONCRETE CURB
3" = 1'-0"

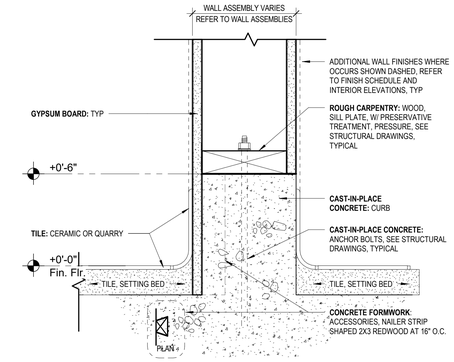

H5 INT. WALL SILL @ CONCRETE CURB
3" = 1'-0"

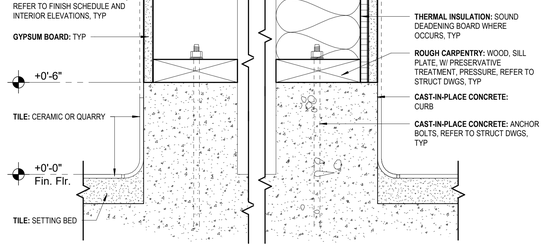

D14 INT. WALL SILL @ CONCRETE CURB
3" = 1'-0"

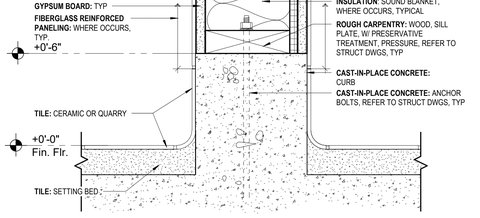

D9 INT. WALL SILL @ CONCRETE CURB
3" = 1'-0"

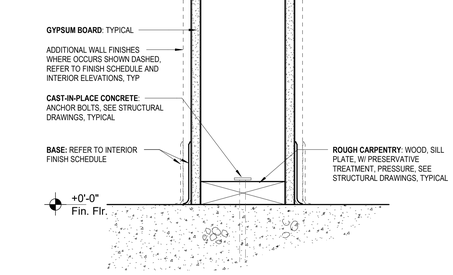

D5 INTERIOR WALL SILL
3" = 1'-0"

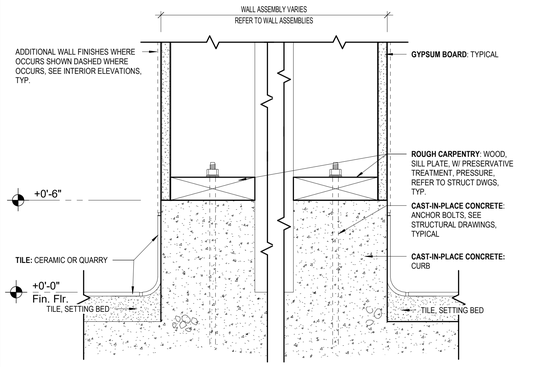

A14 INTERIOR WALL SILL @ CONCRETE CURB
3" = 1'-0"

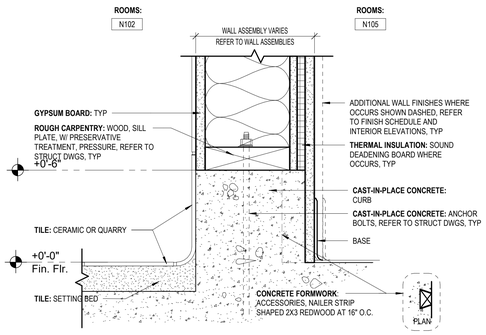

A9 INT. WALL SILL @ CONCRETE CURB
3" = 1'-0"

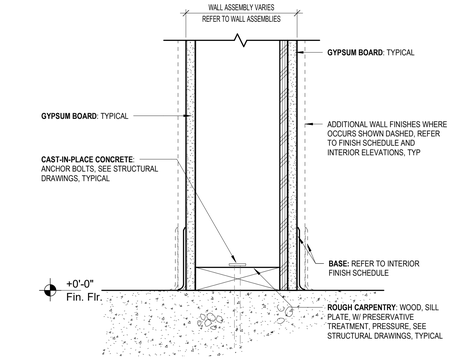

A5 INTERIOR WALL SILL
3" = 1'-0"

PBK
www.pbk.com
559-448-8400
FRESNO, CA

PARLIER HS STADIUM REPLACEMENT

603 3rd Street
Parlier, CA 93648

CLIENT PROJECT NO: 250093
DSA SUBMISSION
DSA APPL. NO.: 02-124002 DSA FILE NO.: 10-H12

PARLIER UNIFIED SCHOOL DISTRICT

LICENSED ARCHITECT
MICHELE GARGANO
No. C-32500
RENEWAL DATE
MAR 31, 2027
STATE OF CALIFORNIA

CLIENT
PARLIER UNIFIED SCHOOL DISTRICT

DATE	PROJECT NUMBER
2026/02/09	250093

DRAWING HISTORY

No.	Description	Date

CHECKED BY: Checker
DRAWN BY: Author

INTERIOR DETAILS

AX4.1

Plot Stamp:
6/23/2026 9:34:29 AM

INTERIOR DETAILS AX4.2

FOR BLUEBEAM LABELING/OCR:

COMPRESION STRUT SCHEDULE:

NOT TO SCALE

METAL ANGLES	Minimum R Value	MAX. SPAN (l/r = 200)
∠ 1" X 1" X 1/8"	Rz .196	3'-3"
∠ 1 1/4" x 1 1/4" x 3/16"	Rz .244	4'-0"
∠ 1 1/2" x 1 1/2" x 3/16"	Rz .293	4'-10"
∠ 1 3/4" x 1 3/4" x 3/16"	Rz .343	5'-8"
∠ 2 x 2" x 3/16"	Rz .394	6'-6"
∠ 2 1/2" x 2 1/2" x 3/16"	Rz .482	8'-0"
∠ 3" x 3" x 3/16"	Rz .586	9'-9"
∠ 3 1/2" x 3 1/2" x 1/4"	Rz .688	11'-6"
∠ 4" x 4" x 1/4"	Rz .783	13'-0"
ALTERNATE COMPRESSION STRUTS		
COLD ROLLER CHANNELS (CRC)		
3/4" X 16 GA.	R 0.153	2'-6"
1-1/2" X 16 GA	R 0.170	2'-10"
2" X 16 GA	R 0.170	2'-10"
ELECTRICAL METALLIC TUBING (EMT)		
1" Thinwall Type Conduit	R 0.391	6'-6"
METAL STUDS, SINGLE		
25 GA. X 2 1/2"	R 0.421	7'-0"
25 GA. X 3 1/2"	R 0.404	6'-8"
20 GA. X 1 5/8"	R 0.603	10'-0"
20 GA. X 2 1/2"	R 0.605	10'-1"
20 GA. X 3 1/2"	R 0.506	9'-11"
METAL STUDS, DOUBLE "T" CONFIGURATION		
25 GA. X 2 1/2"	R 1.011	16'-10"
25 GA. X 3 1/2"	R 1.359	22'-7"
20 GA. X 1 5/8"	R 0.689	11'-5"
20 GA. X 2 1/2"	R 1.035	17'-3"
20 GA. X 3 1/2"	R 1.409	23'-5"



NOTES:

1. MATERIALS USED SHALL NOT BE LESS THAN THE MINIMUM "R" VALUE SHOWN IN THE ABOVE TABLES
2. COMPRESSION STRUT AND BRACING WIRE CONDITIONS SHALL BE LOCATED ON GRID NOT EXCEEDING 12'-0" X 12'-0". THE "DATUM" POINT FOR STARTING THE STRUT/BRACING GRID SHALL BE 6'-0" FROM ONE WALL (HALF OF 12'-0") AND 6'-0" FROM AN ADJACENT PERPENDICULAR WALL (HALF OF 12'-0")
3. ~~COMPRESSION STRUT AND BRACING WIRE CONDITIONS FOR FIRE RELATED CEILINGS; HOSPITALS AND ESSENTIAL SERVICES BUILDINGS; SHALL BE LOCATED ON A GRID NOT EXCEEDING 12'-0" X 8'-0". THE "DATUM" POINT FOR STARTING THE STRUT/BRACING GRID SHALL BE 6'-0" FROM ONE WALL (HALF OF 12'-0") AND 4'-0" FROM AN ADJACENT PERPENDICULAR WALL (HALF OF 8'-0").~~ NOT USED
4. COMPRESSION STRUT SHALL NOT REPLACE THE VERTICAL HANGER WIRES. SEE FOR HANGER WIRE INFORMATION.
5. THIS DETAIL SHALL BE USED FOR LAY-IN TILE AND GYPSUM BOARD SUSPENSION SYSTEM LAY-IN SYSTEM SHOWN HERE FOR CLARITY.

PERIMETER CEILING DETAIL:

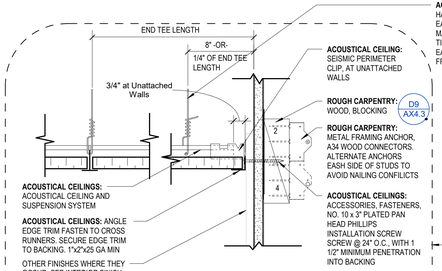

STRUT CONNECTIONS:

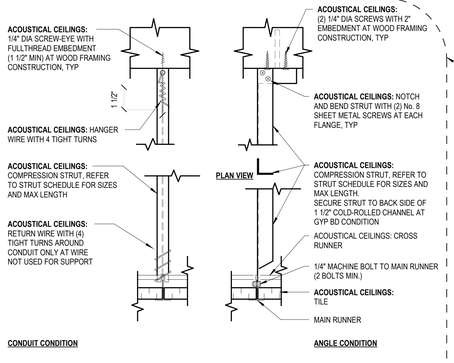

CONDUIT CONDITION

ANGLE CONDITION

ISOMETRIC VIEW:

NOT TO SCALE

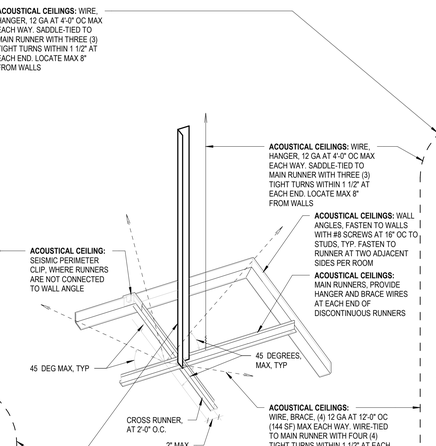

NOTES:

1. SPLICES IN SLOTTED WALL ANGLES SHALL BE WITH MIN 12" LAP AND FASTEN WITH (2) #8 SCREWS AT EACH FLANGE
2. FIRE RATED CEILINGS: WIRE BRACE AND COMPRESSION STRUT ASSEMBLIES ARE REQUIRED FOR EACH 96 SQUARE FEET AND THE FIRST ASSEMBLY SHALL BE LOCATED 4'-0" MAX FROM EACH WALL
3. REFER TO DIVISION OF THE STATE ARCHITECT (DSA) INTERPRETATIONS OF REGULATIONS (IR) MANUAL, IR 25-2.19 FOR SUPPLEMENTAL ACOUSTICAL CEILING SUSPENSION SYSTEM INFORMATION. A COPY OF THE MANUAL CAN BE OBTAIN THROUGH DSA. (916) 937-3700 OR WWW.DSA.CA.GOV.
4. REFER TO CBC SECTION 1616A.1.21, THE DESIGN AND INSTALLATION TO BE IN COMPLIANCE WITH ASTM C635, C636, AND E580, SECTION 5, AS AMENDED BY 2019 CBC SECTION 1616A.1.21

WIRE BRACE TO STRUCTURE ATTACHMENT:

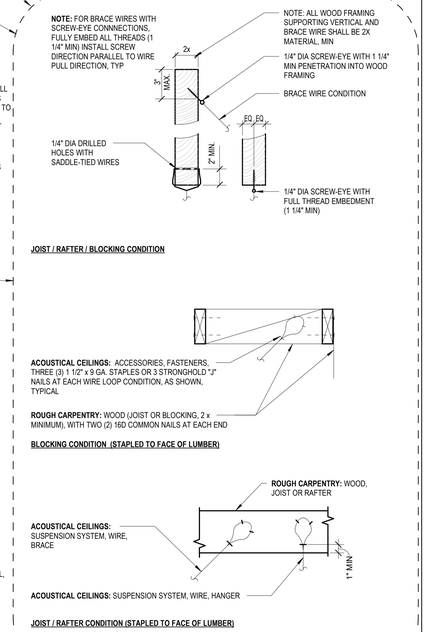

H18 ACOUSTICAL CEILING: SUSPENSION SYSTEM

3" = 1'-0"

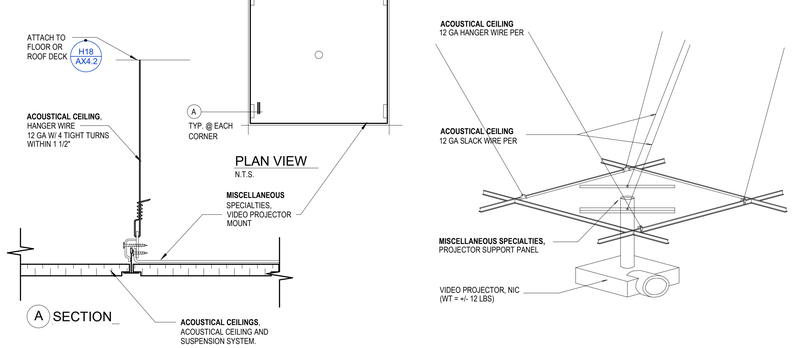

D18 PROJECTOR SUPPORT

3" = 1'-0"

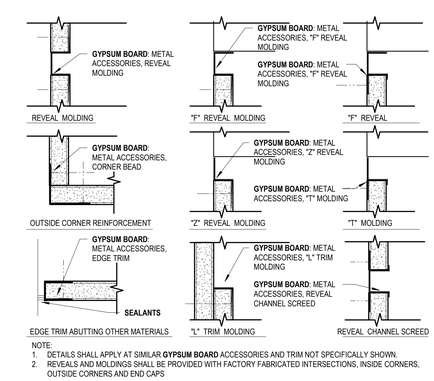

NOTE:
1. DETAILS SHALL APPLY AT SIMILAR **GYPSUM BOARD** ACCESSORIES AND TRIM NOT SPECIFICALLY SHOWN.
2. REVEALS AND MOLDINGS SHALL BE PROVIDED WITH FACTORY FABRICATED INTERSECTIONS, INSIDE CORNERS, OUTSIDE CORNERS AND END CAPS

A18 GYPSUM BOARD, METAL ACCESSORIES

6" = 1'-0"

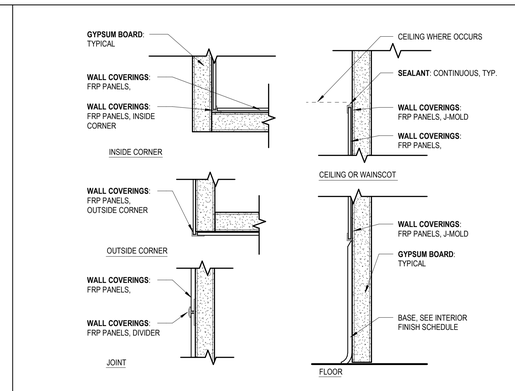

A14 FRP PANELS, ALUMINUM TRIMS

6" = 1'-0"

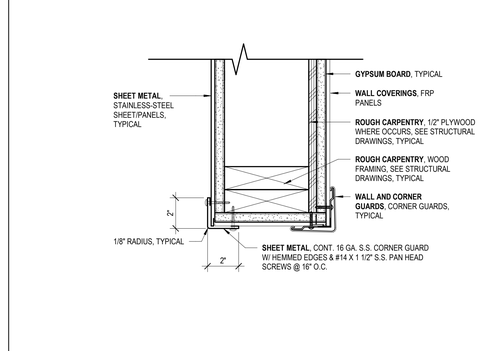

D9 STAINLESS STEEL OUTSIDE CORNER GUARD

3" = 1'-0"

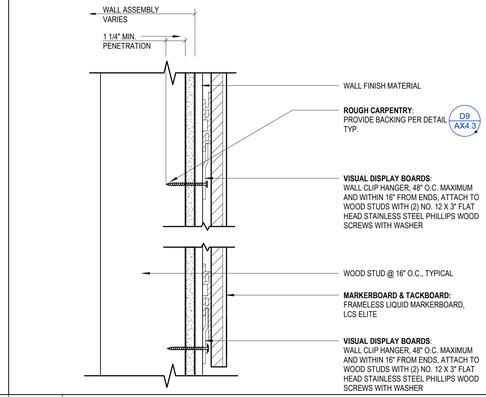

A9 LIQUID MARKERBOARD/TACKBOARD

3" = 1'-0"

H5 GYPSUM BOARD, METAL ACCESSORIES

3" = 1'-0"

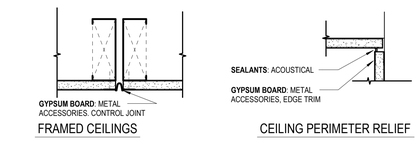

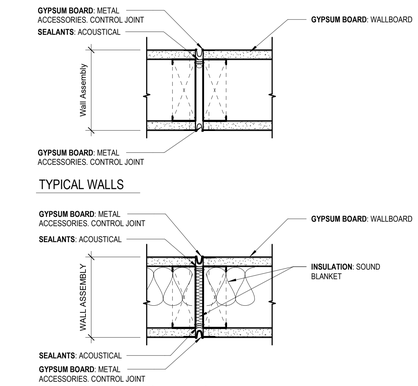

NOTE:
1. UNLESS OTHERWISE INDICATED CONTROL JOINT SHALL BE PROVIDED AT CONTINUOUS INTERIOR PARTITIONS WITH UNINTERRUPTED PLANES THAT EXCEED 30'-0" IN LENGTH OR 900 SF IN AREA.
2. UNLESS OTHERWISE INDICATED CONTROL JOINT SHALL BE PROVIDED AT CONTINUOUS CEILINGS WITH UNINTERRUPTED PLANES THAT EXCEED 50' IN LENGTH OR 2500 SF IN AREA WITH PERIMETER RELIEF, OR CEILINGS EXCEEDING 30'-0" IN LENGTH OR 900 SF IN AREA WITHOUT PERIMETER RELIEF.

A5 SOFFIT DETAIL

3" = 1'-0"

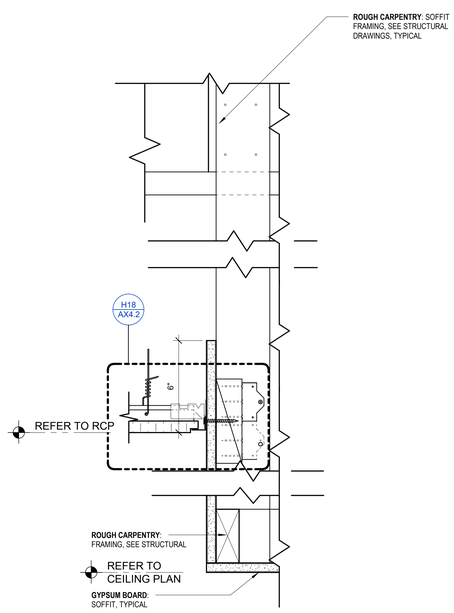

PARLIER HS STADIUM REPLACEMENT
603 3rd Street
Parlier, CA 93648

CLIENT PROJECT NO: 250093
DSA SUBMISSION
DSA APPL. NO.: 02-124002 DSA FILE NO.: 10-H12

PARLIER UNIFIED SCHOOL DISTRICT

MICHELE GARGANO No. C-32550 RENEWAL DATE: MAR 31, 2027 LICENSED ARCHITECT STATE OF CALIFORNIA

CLIENT	
PARLIER UNIFIED SCHOOL DISTRICT	
DATE	PROJECT NUMBER
2026/02/09	250093

DRAWING HISTORY

No.	Description	Date

CHECKED BY: Checker

DRAWN BY: Author

INTERIOR DETAILS

AX4.2

PBK
www.pbk.com
559-448-8400
FRESNO, CA

Plot Stamp:
6/23/2026 9:34:30 AM

INTERIOR DETAILS
AX4.3
FOR BLUEBEAM LABELING/OCR:

L18 LOCKER BASE
1" = 1'-0"

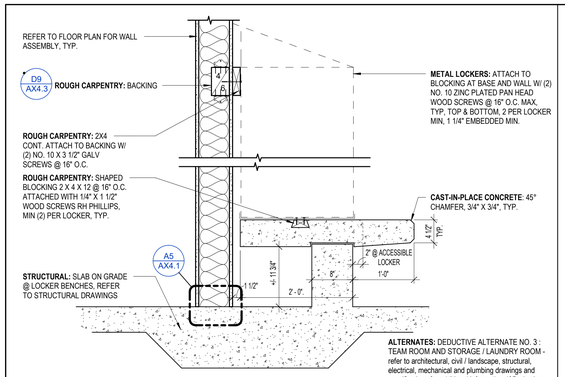

NOTE: REINFORCEMENT NOT SHOWN, REFER TO STRUCTURAL

ALTERNATES: DEDUCTIVE ALTERNATE NO. 3 : TEAM ROOM AND STORAGE / LAUNDRY ROOM - refer to architectural, civil / landscape, structural, electrical, mechanical and plumbing drawings and specifications for additional information. If Deductive Alternate No. 3 is accepted, 944 SF (+/-) of building area from building 'N' (Team Room and Storage / laundry Room) is deleted from the project. Refer to new layouts without the Team room and Storage / Laundry Room in the trades referenced above.

L14 TECTUM
3" = 1'-0"

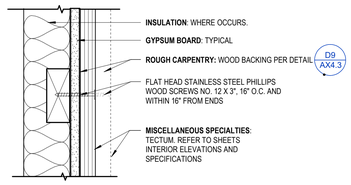

ALTERNATES: DEDUCTIVE ALTERNATE NO. 3 : TEAM ROOM AND STORAGE / LAUNDRY ROOM - refer to architectural, civil / landscape, structural, electrical, mechanical and plumbing drawings and specifications for additional information. If Deductive Alternate No. 3 is accepted, 944 SF (+/-) of building area from building 'N' (Team Room and Storage / laundry Room) is deleted from the project. Refer to new layouts without the Team room and Storage / Laundry Room in the trades referenced above.

L9 TOILET PARTITIONS, WALL ANCHORAGE
3" = 1'-0"

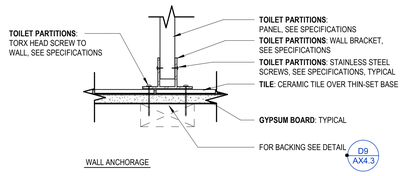

WALL ANCHORAGE

L5 ACCESSIBLE LOCKER ROOM BENCH
3/8" = 1'-0"

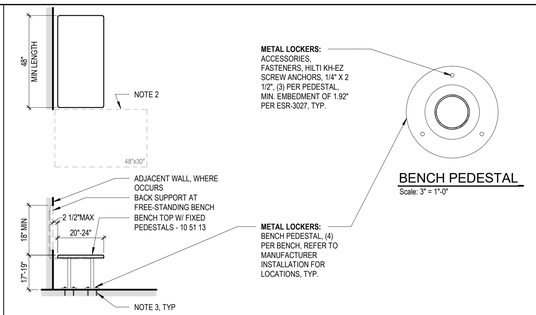

NOTES:
1. DIMENSIONS AND NOTES REPRESENT THE MINIMUM REQUIREMENTS. ACTUAL INSTALLATION CONFIGURATIONS ARE SHOWN ON THE ENLARGED PLANS.
2. 48"x30" MINIMUM CLEAR FLOOR SPACE AT END OF BENCH SEAT PARALLEL TO SHORT AXIS OF BENCH.
3. ANCHORAGE TO SUPPORT 250# MAXIMUM ALLOWABLE HORIZONTAL OR VERTICAL STRESS APPLIED ON THE SEAT, FASTER, MOUNTING DEVICE OR SUPPORT STRUCTURE.

ALTERNATES: DEDUCTIVE ALTERNATE NO. 3 : TEAM ROOM AND STORAGE / LAUNDRY ROOM - refer to architectural, civil / landscape, structural, electrical, mechanical and plumbing drawings and specifications for additional information. If Deductive Alternate No. 3 is accepted, 944 SF (+/-) of building area from building 'N' (Team Room and Storage / laundry Room) is deleted from the project. Refer to new layouts without the Team room and Storage / Laundry Room in the trades referenced above.

H18 TOILET ACCESSORIES & PLG FIXTURES, LOCATION & MOUNTING HEIGHTS, TYPICAL
1/4" = 1'-0"

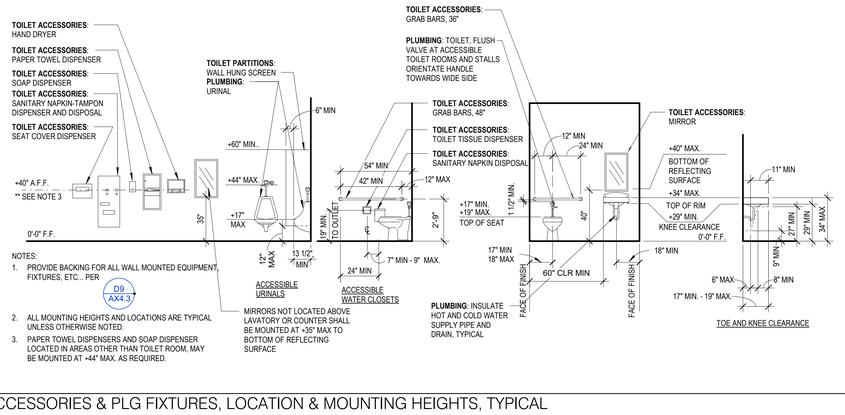

NOTES:
1. PROVIDE BACKING FOR ALL WALL MOUNTED EQUIPMENT, FIXTURES, ETC... PER D9 AX4.3
2. ALL MOUNTING HEIGHTS AND LOCATIONS ARE TYPICAL UNLESS OTHERWISE NOTED.
3. PAPER TOWEL DISPENSERS AND SOAP DISPENSER LOCATED IN AREAS OTHER THAN TOILET ROOM, MAY BE MOUNTED AT +44" MAX. AS REQUIRED.

MIRRORS NOT LOCATED ABOVE LAVATORY OR COUNTER SHALL BE MOUNTED AT +35" MAX TO BOTTOM OF REFLECTING SURFACE

PLUMBING: INSULATE HOT AND COLD WATER SUPPLY PIPE AND DRAIN, TYPICAL

H9 TOILET PARTITIONS, FLOOR ANCHORAGE
3" = 1'-0"

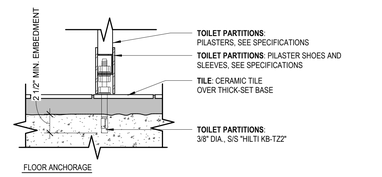

FLOOR ANCHORAGE

H5 ACCESSIBLE LOCKER REQUIREMENTS
1/2" = 1'-0"

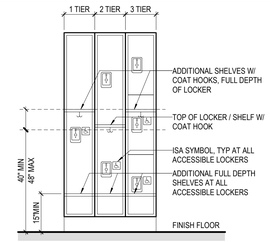

NOTES:
1. OPERABLE PARTS OF ACCESSIBLE LOCKERS SHALL BE OPERABLE WITH ONE HAND AND SHALL NOT REQUIRE TIGHT GRASPING, PINCHING, OR TWISTING OF THE WRIST.
2. THE FORCE REQUIRED TO ACTIVATE ANY OPERABLE PART SHALL BE 5# (22.2N) MAXIMUM.
3. REFER TO THE ENLARGED PLANS FOR ACCESSIBLE LOCKER LOCATIONS, CONFIGURATION AND COUNT CALCULATION.

ALTERNATES: DEDUCTIVE ALTERNATE NO. 3 : TEAM ROOM AND STORAGE / LAUNDRY ROOM - refer to architectural, civil / landscape, structural, electrical, mechanical and plumbing drawings and specifications for additional information. If Deductive Alternate No. 3 is accepted, 944 SF (+/-) of building area from building 'N' (Team Room and Storage / laundry Room) is deleted from the project. Refer to new layouts without the Team room and Storage / Laundry Room in the trades referenced above.

D18 TOILET ACCESSORIES & PLG FIXTURES, BOYS & GIRLS TOILET ROOM DIMENSIONS AGES 9-12
1/4" = 1'-0"

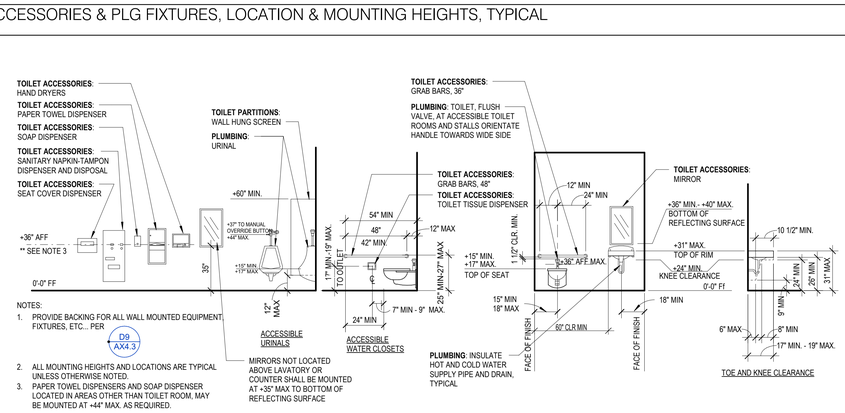

MIRRORS NOT LOCATED ABOVE LAVATORY OR COUNTER SHALL BE MOUNTED AT +35" MAX TO BOTTOM OF REFLECTING SURFACE

PLUMBING: INSULATE HOT AND COLD WATER SUPPLY PIPE AND DRAIN, TYPICAL

D9 ROUGH CARPENTRY, BACKING DETAIL
1" = 1'-0"

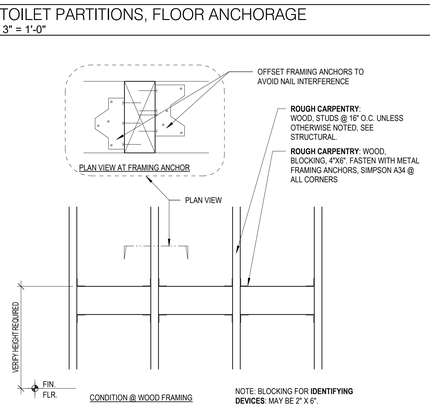

D5 STEEL AND FABRICATIONS, DRINKING FOUNTAIN GUARDRAIL
3/4" = 1'-0"

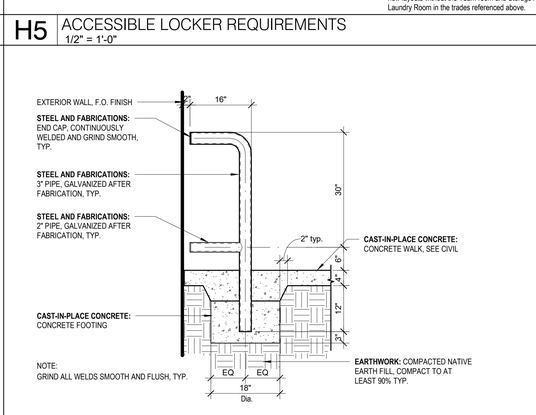

NOTE: GRIND ALL WELDS SMOOTH AND FLUSH, TYP.

A18 TOILET ACCESSORIES, GRAB BAR DETAIL
3" = 1'-0"

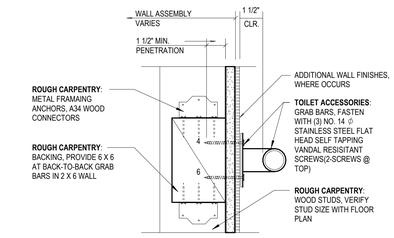

A14 FIRE EXTINGUISHERS
3" = 1'-0"

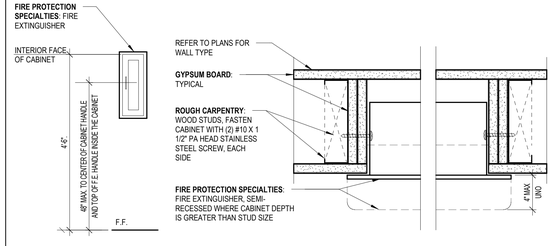

ELEVATION
SCALE: 1/2" = 1'-0"

PLAN VIEW

A9 PLUMBING, HIGH-LO DF W/ WATER FILLING STATION
1/2" = 1'-0"

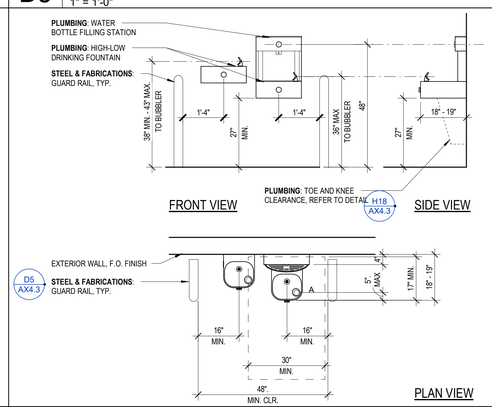

A5 PLUMBING, HIGH-LO DF W/ WATER FILLING STATION
1/2" = 1'-0"

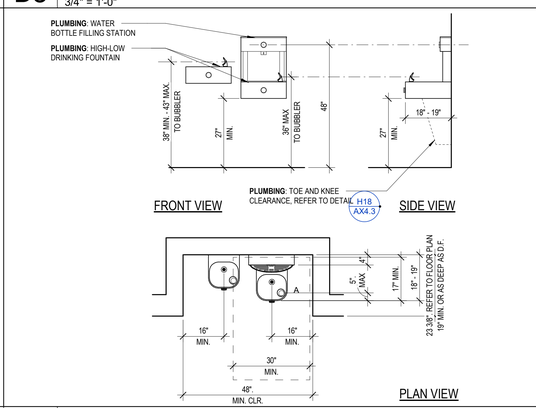

PARLIER HS STADIUM REPLACEMENT

603 3rd Street
Parlier, CA 93648

CLIENT PROJECT NO: 250093

DSA SUBMISSION
DSA APPL. NO. : 02-124002 DSA FILE NO. : 10-H12

PBK
FRESNO, CA
559-448-8400
www.pbk.com

PARLIER UNIFIED SCHOOL DISTRICT

LICENSED ARCHITECT
MICHELE GARGANO
No. C-32950
RENEWAL DATE
MAR 31, 2027
STATE OF CALIFORNIA

CLIENT
PARLIER UNIFIED SCHOOL DISTRICT
DATE 2026/02/09
PROJECT NUMBER 250093

DRAWING HISTORY

No.	Description	Date
5	DSA Comments, DWG V2	2026-06-25

CHECKED BY: Checker
DRAWN BY: Author

INTERIOR DETAILS

AX4.3

Plot Stamp:
6/23/2026 9:34:31 AM

INTERIOR DETAILS
AX4.4
FOR BLUEBEAM LABELING/OCR:

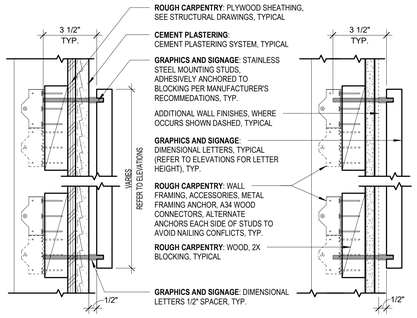

H9 GRAPHICS & SIGNAGE ATTACHMENTS
MAX WT NOT TO EXCEED 25 LBS
3" = 1'-0"

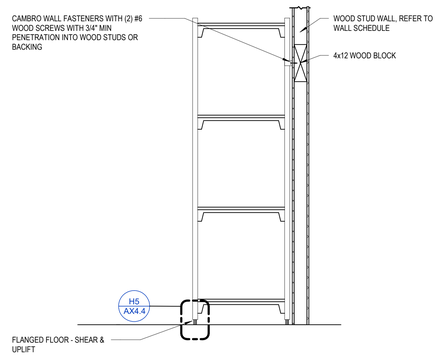

D9 SHELVING UNIT WALL ATTACHMENT
1" = 1'-0"

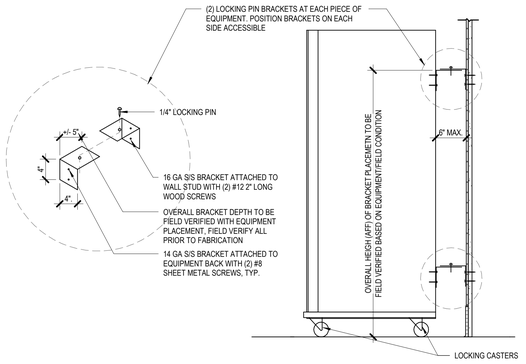

A9 MOBILE REFRIGERATOR ANCHORAGE
1" = 1'-0"

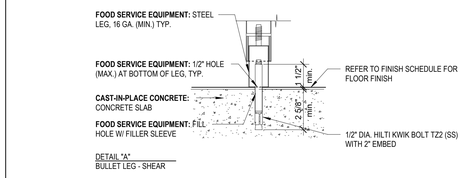

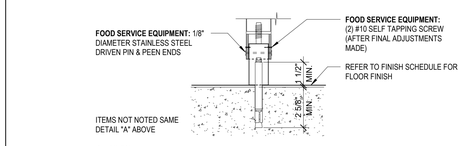

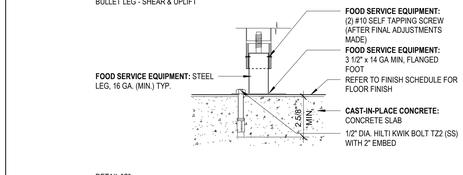

H5 SEISMIC RESTRAINT - BASE
3" = 1'-0"

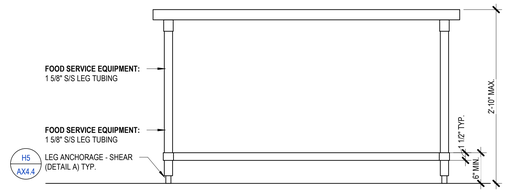

D5 FREE STANDING TABLE ANCHORAGE
1" = 1'-0"

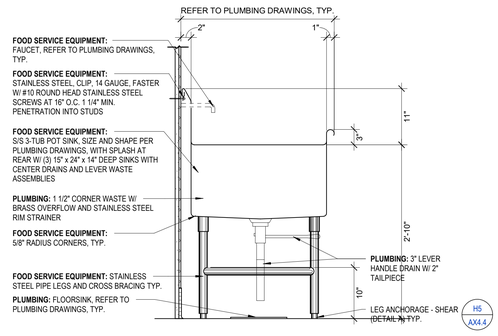

A5 THREE COMPARTMENT SINK
1" = 1'-0"

Plot Stamp:
6/23/2026 9:34:30 AM

PARLIER HS STADIUM REPLACEMENT

603 3rd Street
Parlier, CA 93648

CLIENT PROJECT NO: 250093

DSA SUBMISSION
DSA APPL. NO.: 02-124002 DSA FILE NO.: 10-H12

PBK
FRESNO, CA
559-448-8400
www.pbk.com

PARLIER UNIFIED SCHOOL DISTRICT

LICENSED ARCHITECT
MICHELE GARGANO
No. C-32593
RENEWAL DATE
MAR 31, 2027
STATE OF CALIFORNIA

CLIENT
PARLIER UNIFIED SCHOOL DISTRICT

DATE	PROJECT NUMBER
2026/02/09	250093

DRAWING HISTORY

No.	Description	Date
1	Addendum #1	2026-05-29

CHECKED BY: Checker
DRAWN BY: Author

INTERIOR DETAILS

AX4.4

OPENING SCHEDULES AX5.1

FOR BLUEBEAM LABELING/OCR:

WINDOW SCHEDULE

Building	Mark	FRAME TYPE	SIZE		DETAILS				GLAZING TYPE	COMMENTS
			WIDTH	HEIGHT	MATERIAL FINISH	HEAD	JAMB	SILL		
M	M100A	HM-3	3'-4 3/8"	4'-4"	HM	L5/AX5.2 SIM	H5/AX5.2 SIM	D18/AX5.4	G-1.2	SERVICE WINDOW
M	M100B	HM-5	8'-10"	6'-2"	HM	L5/AX5.2	H5/AX5.2	H5/AX5.2	G-1	
M	M100C	HM-3	3'-4 3/8"	4'-4"	HM	L5/AX5.2 SIM	H5/AX5.2 SIM	D18/AX5.4	G-1.2	SERVICE WINDOW
M	M104A	HM-3	3'-4 3/8"	4'-4"	HM	L5/AX5.2 SIM	H5/AX5.2 SIM	D18/AX5.4	G-1.2	SERVICE WINDOW
N	N100A	HM-4	9'-0"	4'-4"	HM	L5/AX5.2 SIM	H5/AX5.2 SIM	D18/AX5.4	G-1.2	SERVICE WINDOW
N	N100B	HM-4	9'-0"	4'-4"	HM	L5/AX5.2 SIM	H5/AX5.2 SIM	D18/AX5.4	G-1.2	SERVICE WINDOW
N	N100C	HM-4	9'-0"	4'-4"	HM	L5/AX5.2 SIM	H5/AX5.2 SIM	D18/AX5.4	G-1.2	SERVICE WINDOW

DOOR SCHEDULE

BLDG NO	DOOR NO	FRAME TYPE	DOOR SIZE			DOOR MATERIAL	DOOR TYPE	DETAILS			HARDWARE	FIRE RATING	COMMENTS / DOOR STOPS
			WIDTH	HEIGHT	THICKNESS			HEAD	JAMB	THRESHOLD			
M	M100A	HM-1	3'-0"	7'-0"	1 3/4"		F	L5/AX5.2	H5/AX5.2	A14/AX5.4	02		Door Stop:1-OH Stop & Holder 90H 689 as Manufacturer by GLY
M	M101A	HM-1	3'-0"	7'-0"	1 3/4"		F	L5/AX5.2	H5/AX5.2	A14/AX5.4	03		Door Stop: Per Detail H14/AX5.4
M	M102A	HM-1	3'-0"	7'-0"	1 3/4"		F	L5/AX5.2	H5/AX5.2	A14/AX5.4	03		Door Stop: Per Detail L14/AX5.4
M	M103A	HM-1	3'-0"	7'-0"	1 3/4"		F	L5/AX5.2	H5/AX5.2	A14/AX5.4	03		Door Stop: Per Detail L14/AX5.4
M	M104A	HM-1	3'-0"	7'-0"	1 3/4"		F	L5/AX5.2	H5/AX5.2	A14/AX5.4	02		Door Stop: Per Detail H9/AX5.4
M	M105A	HM-1	3'-0"	7'-0"	1 3/4"		F	L5/AX5.2	H5/AX5.2	A14/AX5.4	04		Door Stop:1-OH Stop & Holder 90H 689 as Manufacturer by GLY
N	N100A	HM-1	3'-4"	7'-0"	1 3/4"		F	L5/AX5.2	H5/AX5.2	A14/AX5.4	02		Door Stop: Per Detail H9/AX5.4
N	N100B	HM-2	6'-0"	7'-0"	1 3/4"		PF				06		
N	N100C	HM-2	6'-0"	7'-0"	1 3/4"		PF				06		
N	N101A	HM-1	3'-0"	7'-0"	1 3/4"		F	L5/AX5.2	H5/AX5.2	A14/AX5.4	03		Door Stop: Per Detail L14/AX5.4
N	N101B	HM-1	3'-0"	7'-0"	1 3/4"		F	L5/AX5.2	H5/AX5.2	A14/AX5.4	03		Door Stop: Per Detail L14/AX5.4
N	N102A	HM-1	3'-0"	7'-0"	1 3/4"		F	L5/AX5.2	H5/AX5.2	A14/AX5.4	03		Door Stop: Per Detail L14/AX5.4
N	N102B	HM-1	3'-0"	7'-0"	1 3/4"		F	L5/AX5.2	H5/AX5.2	A14/AX5.4	03		Door Stop: Per Detail L14/AX5.4
N	N103A	HM-1	3'-0"	7'-0"	1 3/4"		F	L5/AX5.2	H5/AX5.2	A14/AX5.4	03		Door Stop: Per Detail H14/AX5.4
N	N104A	HM-1	3'-0"	7'-0"	1 3/4"		F	L5/AX5.2	H5/AX5.2	A14/AX5.4	03		Door Stop: Per Detail H14/AX5.4
N	N105A	HM-1	3'-6"	7'-0"	1 3/4"		F2	L5/AX5.2	H5/AX5.2	A14/AX5.4	02		Door Stop: Per Detail H14/AX5.4
N	N105B	HM-1.2	3'-0"	7'-0"	1 3/4"		F	A14/AX5.2	L5/AX5.2	A18/AX5.4	05	45 mins	9, 10, Door Stop: Per Detail L14/AX5.4
N	N106A	HM-1	3'-0"	7'-0"	1 3/4"		F	L5/AX5.2	H5/AX5.2	A14/AX5.4	01		Door Stop:1-OH Stop & Holder 90H 689 as Manufacturer by GLY
N	N107A	HM-1	3'-0"	7'-0"	1 3/4"		F	L5/AX5.2	H5/AX5.2	A14/AX5.4	04		Door Stop: Per Detail H9/AX5.4
N	N108A	HM-1	3'-0"	7'-0"	1 3/4"		F	L5/AX5.2	H5/AX5.2	A14/AX5.4	04		Door Stop: Per Detail H9/AX5.4

ALTERNATES: DEDUCTIVE ALTERNATE NO. 3 : TEAM ROOM AND STORAGE / LAUNDRY ROOM - refer to architectural, civil / landscape, structural, electrical, mechanical and plumbing drawings and specifications for additional information. If Deductive Alternate No. 3 is accepted, 944 SF (+/-) of building area from building 'N' (Team Room and Storage / laundry Room) is deleted from the project. Refer to new layouts without the Team room and Storage / Laundry Room in the trades referenced above.

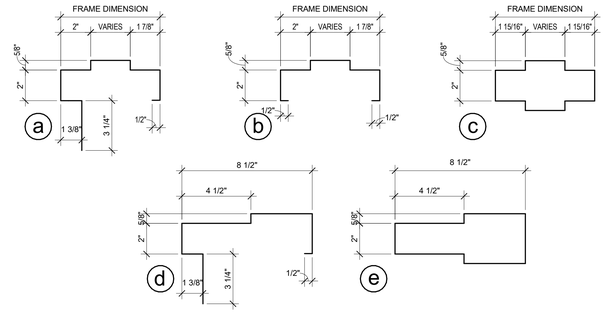

J12 HOLLOW METAL FRAME SECTIONS
3" = 1'-0"

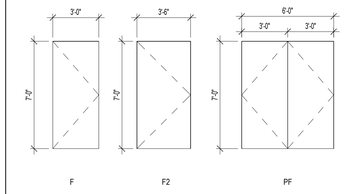

J9 DOOR TYPES LEGEND
1/4" = 1'-0"

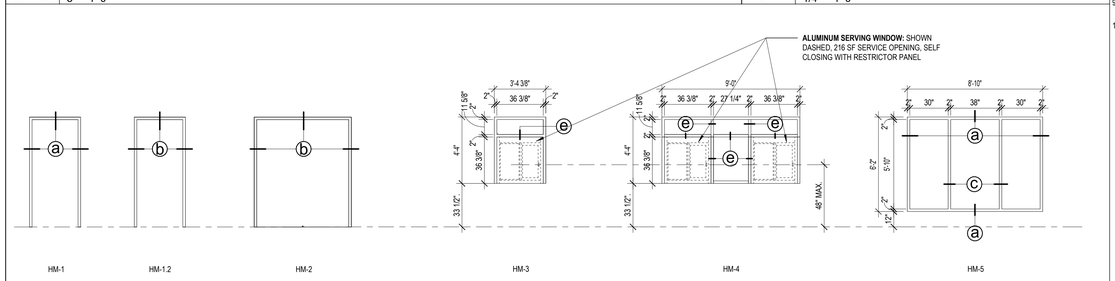

REFER TO DETAIL J12 / AX5.1 FOR HOLLOW METAL FRAME SECTIONS. HOLLOW METAL FRAME SECTION ⓓ IS TYPICAL U.N.O.

G12 FRAME TYPES
1/4" = 1'-0"

OPENING SCHEDULE LEGEND

ABBREVIATIONS:

OSS - STEEL WINDOWS, FRAMES, OPERABLE STEEL SASH, REFER TO SHEET: X/XXXX.
SG - STEEL GATE
SW - SERVICE WINDOW
STL - STEEL
AL - ALUMINUM
SF - STOREFRONT
HM - HOLLOW METAL
SG - SITE GATE
SPF - STEEL POST FENCE
AC - ACOUSTICAL
SS - STAINLESS STEEL
CL - CHAIN LINK
WD - WOOD
CD - COILING DOORS,
GALV - GALVANIZED FINISH
S&F - STEEL AND FABRICATIONS
RO - ROUGH OPENING
LFWD - LAMINATE-FACE WOOD DOORS
T - TEMPERED

GENERAL NOTES:

1. THIS SCHEDULE IS PROVIDED FOR THE CONVENIENCE OF THE GENERAL CONTRACTOR. DIMENSIONS INDICATED ARE NOMINAL DIMENSIONS
2. THE GENERAL CONTRACTOR IS RESPONSIBLE FOR ALL COORDINATION AND REVIEW OF DRAWINGS AND VERIFYING ALL FIELD CONDITIONS AND DIMENSIONS PRIOR TO FABRICATION. NOT ALL DETAIL REFERENCES ARE INCLUDED IN THE SCHEDULE
3. PROVIDE METAL CLOSURE PLATES FOR HM FRAMES AT CONCRETE CURBS, TYP, REFER TO DETAIL H14 / AX5.2
4. ALL DETAILS, MATERIALS AND FINISHES SHALL BE CONSIDERED TYP FOR ALL SIMILAR CONDITIONS UON
5. DOOR TYPES ARE SHOWN ON SHEET
6. FRAME TYPES ARE SHOWN ON SHEETS
7. FOR INTERIOR MATERIAL TRANSITIONS REFER TO DETAIL A18 / AX5.4
8. EXIT DOORS SHALL BE OPENABLE FROM INSIDE WITHOUT THE USE OF A KEY OR ANY SPECIAL KNOWLEDGE OR EFFORT
9. FOR OPENING HEAD, JAMB, AND SILL FRAMING CONDITIONS, SEE STRUCTURAL DRAWINGS, TYP.
10. AT EXTERIOR WALL LOCATIONS, PROVIDE FLASHING AS NOTED IN OPENING SCHEDULE COMMENTS #1 AND '2, WHETHER NOTED IN THE SCHEDULE OR NOT
11. ALL GLAZING FOR WINDOWS TO BE TEMPERED

OPENING SCHEDULE COMMENTS:

1. FOR FLASHING AT HOLLOW METAL DOORS: EXTERIOR WALL LOCATIONS, REFER TO DETAIL A9 / AX5.2
2. HARDWARE, EXIT/PANIC DEVICES, SECTION HARDWARE, (WHERE OCCURS)
3. NOT USED
4. NOT USED
5. NOT USED
6. NOT USED
7. RELIEF AIR LOUVER, SEE MECHANICAL DRAWINGS, TYP.
8. NOT USED
9. REFER TO CORRESPONDING SPECIFICATION SECTION
10. 1 HR. OCCUPANCY SEPARATION / FIRE BARRIER - (1 HR. FIRE RESISTIVE CONSTRUCTION, 45 MIN. DOOR ASSEMBLIES, 45 MIN. WINDOW ASSEMBLIES)

PBK
www.pbk.com
559-448-8400
FRESNO, CA

PARLIER HS STADIUM REPLACEMENT

603 3rd Street
Parlier, CA 93648

CLIENT PROJECT NO: 250093
DSA SUBMISSION
DSA APPL. NO.: 02-124002 DSA FILE NO.: 10-H12

PARLIER UNIFIED SCHOOL DISTRICT

LICENSED ARCHITECT
MICHELE GARGANO
No. C-32550
RENEWAL DATE
MAR 31, 2027
STATE OF CALIFORNIA

CLIENT	
PARLIER UNIFIED SCHOOL DISTRICT	
DATE	PROJECT NUMBER
2026/02/09	250093

DRAWING HISTORY

No.	Description	Date
4	Addendum #4	2026-05-12

CHECKED BY: Checker

DRAWN BY: Author

OPENING SCHEDULES

AX5.1

Plot Stamp:
6/23/2026 9:34:44 AM

HOLLOW METAL FRAME DETAILS AX5.2

FOR BLUEBEAM LABELING/OCR:

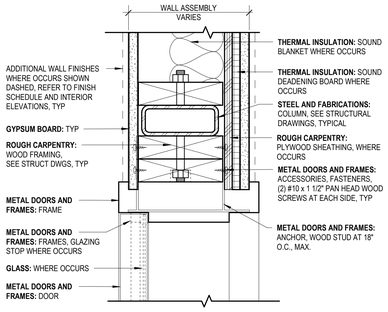

L18 JAMB @ INTERIORS
3" = 1'-0"

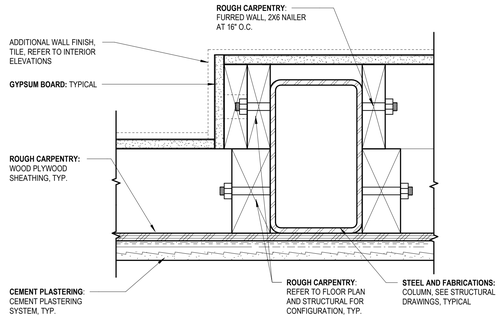

L14 COLUMN @ FURRED WALL
3" = 1'-0"

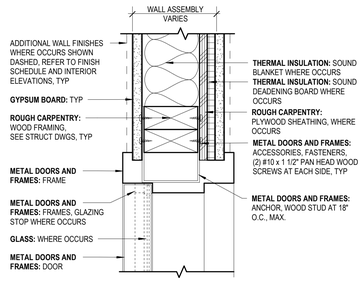

L9 JAMB @ INTERIORS, (UON)-SILL SIM
3" = 1'-0"

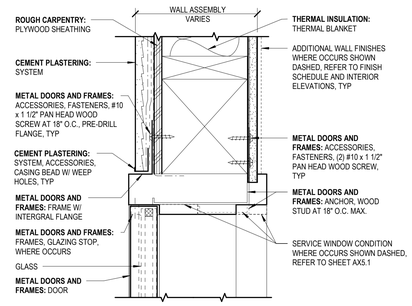

L5 HEAD @ EXTERIOR,TYP (UON)
3" = 1'-0"

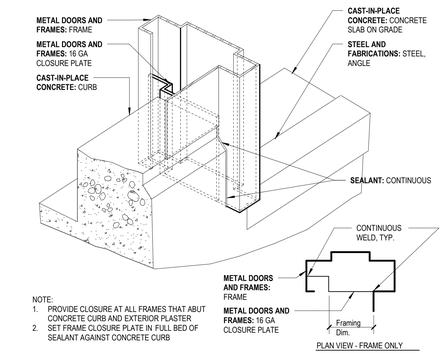

H14 CLOSURE PLATE AT CURB CONDITION
3" = 1'-0"

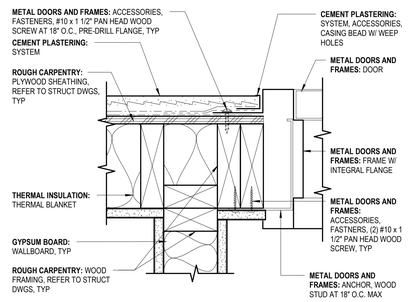

H9 JAMB
3" = 1'-0"

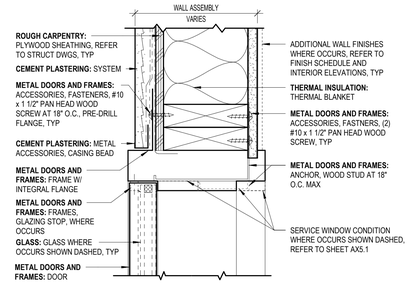

H5 JAMB @ EXTERIORS (UON)-SILL SIM.
3" = 1'-0"

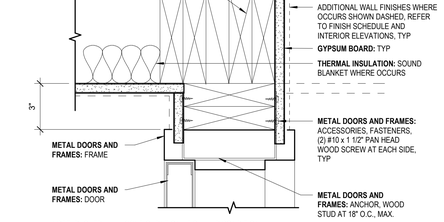

NOTE: DASHED WALL CONFIGURATION AT SIMILAR CONDITION

D14 JAMB @ INTERIOR
3" = 1'-0"

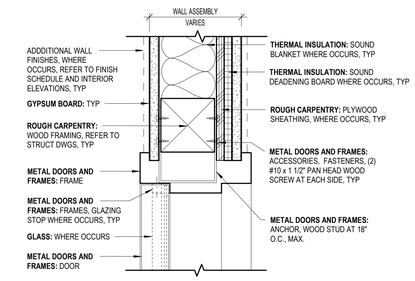

A14 HEAD @ INTERIORS, (UON)
3" = 1'-0"

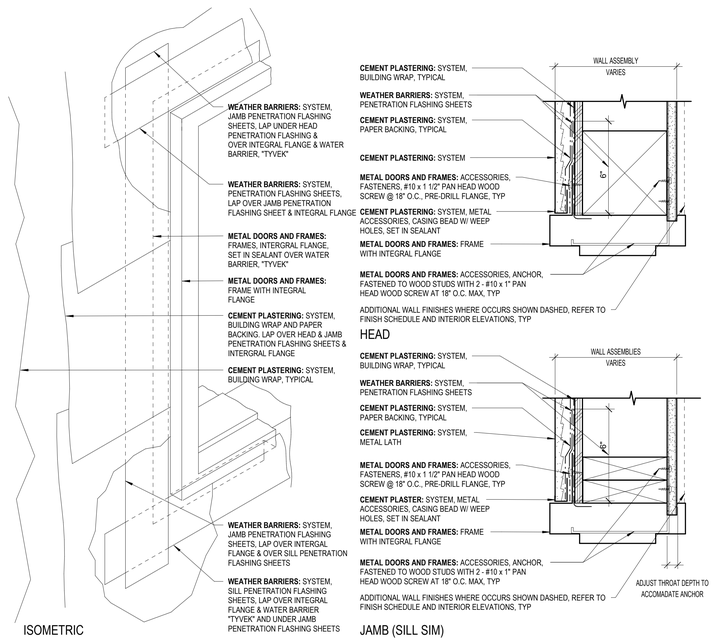

A9 WEATHER BARRIER, WINDOW/DOOR FLASHING
3" = 1'-0"

PBK
FRESNO, CA
559-448-8400
www.pbk.com

PARLIER HS STADIUM REPLACEMENT

603 3rd Street
Parlier, CA 93648

CLIENT PROJECT NO: 250093

DSA SUBMISSION

DSA APPL. NO.: 02-124002 DSA FILE NO.: 10-H12

PARLIER UNIFIED SCHOOL DISTRICT

LICENSED ARCHITECT
MICHELE GARGANO
No. C-32550
RENEWAL DATE
MAR 31, 2027
STATE OF CALIFORNIA

CLIENT	
PARLIER UNIFIED SCHOOL DISTRICT	
DATE	PROJECT NUMBER
2026/02/09	250093

DRAWING HISTORY

No.	Description	Date
5	DSA Comments_BWG V2	2026-06-25

CHECKED BY: Checker

DRAWN BY: Author

HOLLOW METAL FRAME DETAILS

AX5.2

Plot Stamp:
6/23/2026 9:34:32 AM

HARDWARE DETAILS
AX5.4
FOR BLUEBEAM LABELING/OCR:

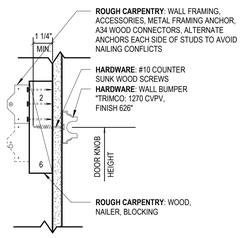

L14 DOOR WALL STOP
3" = 1'-0"

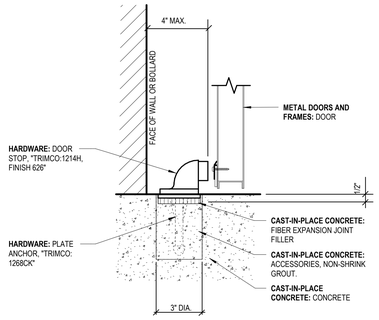

H14 DOOR WALL STOP STRIKE
3" = 1'-0"

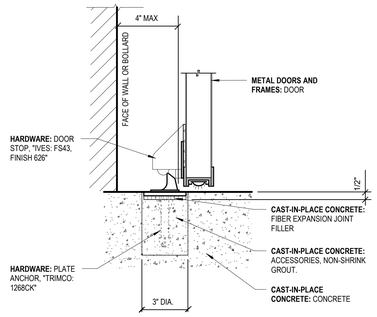

H9 DOOR STOP STRIKE @ EXT & INT
3" = 1'-0"

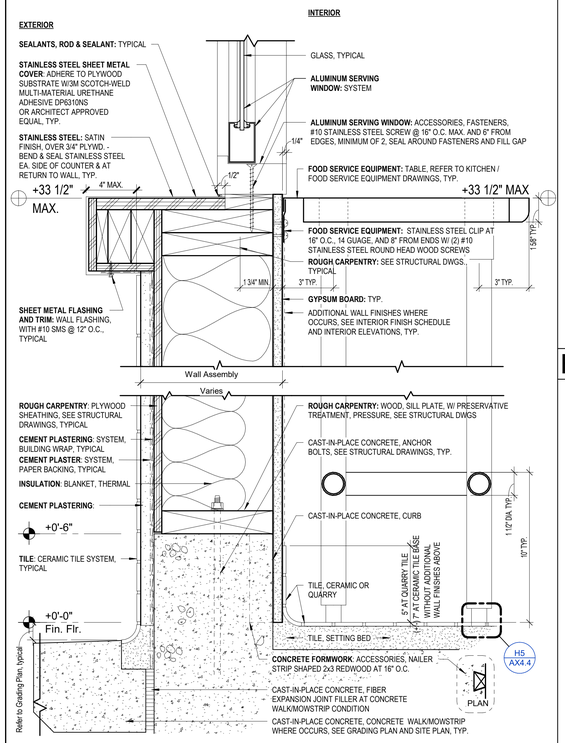

D18 COUNTER @ ALUMINUM SERVING WINDOW
3" = 1'-0"

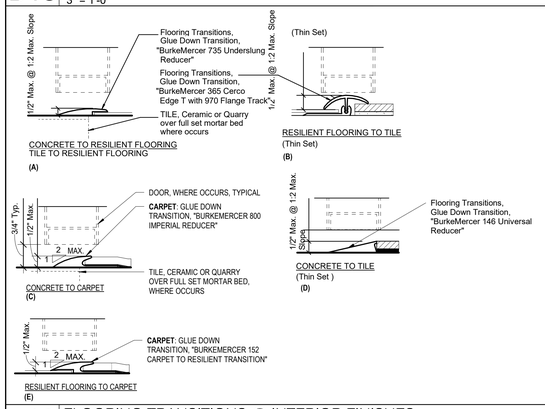

A18 FLOORING TRANSITIONS @ INTERIOR FINISHES
3" = 1'-0"

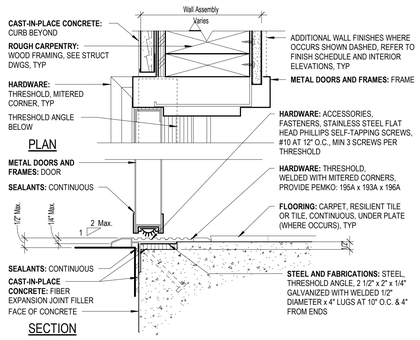

A14 THRESHOLD @ EXTERIOR METAL DOORS
3" = 1'-0"

Plot Stamp:
6/23/2026 9:34:33 AM

PBK
FRESNO, CA
559-448-8400
www.pbk.com

PARLIER HS STADIUM REPLACEMENT
603 3rd Street
Parlier, CA 93648

CLIENT PROJECT NO: 250093
DSA SUBMISSION
DSA APPL. NO.: 02-124002 DSA FILE NO.: 10-H12

PARLIER UNIFIED SCHOOL DISTRICT

LICENSED ARCHITECT
MICHELE GARGANO
No. C-32550
RENEWAL DATE
MAR 31, 2027
STATE OF CALIFORNIA

CLIENT
PARLIER UNIFIED SCHOOL DISTRICT

DATE	PROJECT NUMBER
2026/02/09	250093

DRAWING HISTORY

No.	Description	Date
4	Addendum #4	2026-06-12

CHECKED BY: Checker
DRAWN BY: Author

HARDWARE DETAILS

AX5.4

ARCHITECTURAL WOODWORK
AX6.1
FOR BLUEBEAM LABELING/OCR:

ALTERNATES: DEDUCTIVE ALTERNATE NO. 3 : TEAM ROOM AND STORAGE / LAUNDRY ROOM - refer to architectural, civil / landscape, structural, electrical, mechanical and plumbing drawings and specifications for additional information. If Deductive Alternate No. 3 is accepted, 944 SF (+/-) of building area from building 'N' (Team Room and Storage / laundry Room) is deleted from the project. Refer to new layouts without the Team room and Storage / Laundry Room in the trades referenced above.

CASEWORK SCHEDULE-BUILDING M & N

BLDG.	ROOM NO.	CASEWORK GROUP	DESCRIPTION	MODEL	COUNT	LENGTH	HEIGHT	DEPTH	ACCESSORIES	COMMENTS
M	M100	A100	Base Cabinet w/o Drawers	102	4	3'-4"	2'-6"	2'-0"		
M	M100	A100	Tall Storage Cabinet	447	5	3'-4"	8'-0"	2'-0"		
M	M100	A100	Counter Top		1			2'-1"		
M	M100	A 100	Base Cabinet w/o Drawers	102	1	3'-4"	2'-6"	2'-0"		
N	N105	A105	Tall Storage Cabinet	410	2	5'-0"	7'-0"	2'-0"		

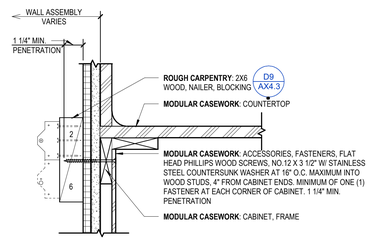

D9 BASE CABINET, ANCHORAGE
3" = 1'-0"

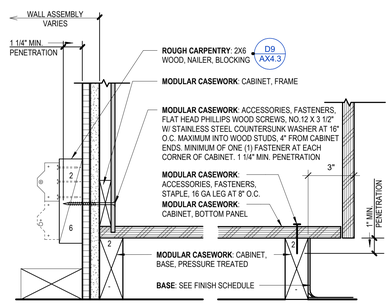

A14 BASE CABINET, ANCHORAGE
3" = 1'-0"

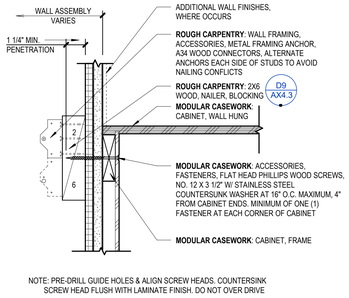

NOTE: PRE-DRILL GUIDE HOLES & ALIGN SCREW HEADS. COUNTERSINK SCREW HEAD FLUSH WITH LAMINATE FINISH. DO NOT OVER DRIVE

A9 WALL CABINET, ANCHORAGE
3" = 1'-0"

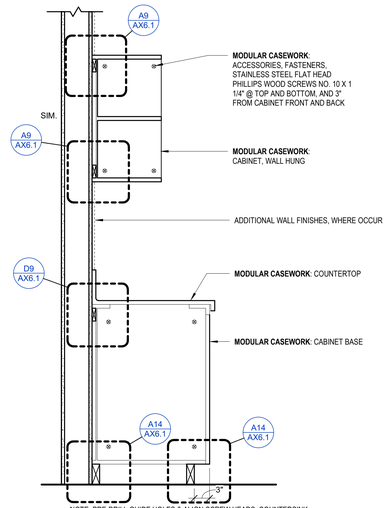

NOTE: PRE-DRILL GUIDE HOLES & ALIGN SCREW HEADS. COUNTERSINK SCREW HEAD FLUSH WITH LAMINATE FINISH. DO NOT OVER DRIVE

A4 BASE AND WALL HUNG CABINET SECTION
1" = 1'-0"

PARLIER HS STADIUM REPLACEMENT

603 3rd Street
Parlier, CA 93648

CLIENT PROJECT NO: 250093
DSA SUBMISSION
DSA APPL. NO. : 02-124002 DSA FILE NO. : 10-H12

PBK
FRESNO, CA
559-448-8400
www.pbk.com

PARLIER UNIFIED SCHOOL DISTRICT

LICENSED ARCHITECT
MICHELE GARGANO
No. C-32550
RENEWAL DATE
MAR 31, 2027
STATE OF CALIFORNIA

CLIENT
PARLIER UNIFIED SCHOOL DISTRICT
DATE 2026/02/09
PROJECT NUMBER 250093
DRAWING HISTORY

No.	Description	Date

CHECKED BY: Checker
DRAWN BY: Author

ARCHITECTURAL WOODWORK

AX6.1

Plot Stamp:
6/23/2026 9:34:45 AM

INTERIOR FINISH SCHEDULES
AX7.1

FOR BLUEBEAM LABELING/DOCR:

INTERIOR FINISH SCHEDULE

ROOM DATA			NORTH		EAST		SOUTH		WEST		
NUMBER	NAME	BASE FINISH	MATERIAL	FINISH	MATERIAL	FINISH	MATERIAL	FINISH	MATERIAL	FINISH	COMMENTS
M100	TICKET BOOTH / STORE	RB	GBD	SGP	GBD	SGP	GBD	SGP	GBD	SGP	
M101	RESTROOM	TL	TL	FF	TL	FF	TL	FF	TL	FF	
M102	WOMEN'S	TL	TL	FF	TL	FF	TL	FF	TL	FF	
M103	MEN'S	TL	TL	FF	TL	FF	TL	FF	TL	FF	
M104	TICKET BOOTH	RB	GBD	SGP	GBD	SGP	GBD	SGP	GBD	SGP	
M105	STORAGE	RB	GBD	SGP	GBD	SGP	GBD	SGP	GBD	SGP	
N100	CONCESSIONS	TL	FRP	FF	FRP	FF	FRP	FF	FRP	FF	
N101	WOMEN'S	TL	TL	FF	TL	FF	TL	FF	TL	FF	
N102	MEN'S	TL	TL	FF	TL	FF	TL	FF	TL	FF	
N103	RESTROOM	TL	TL	FF	TL	FF	TL	FF	TL	FF	
N104	RESTROOM	TL	TL	FF	TL	FF	TL	FF	TL	FF	
N105	STORAGE/LAUNDRY	TL	FRP	FF	FRP	FF	FRP	FF	FRP	FF	
N106	TEAM ROOM	TL	GBD	SGP	GBD	SGP	GBD	SGP	GBD	SGP	
N107	ELECTRICAL/DATA	RB	GBD	SGP	GBD	SGP	GBD	SGP	GBD	SGP	
N108	CUST.	RB	GBD	SGP	GBD	SGP	GBD	SGP	GBD	SGP	

ALTERNATES: DEDUCTIVE ALTERNATE NO. 3 : TEAM ROOM AND STORAGE / LAUNDRY ROOM - refer to architectural, civil / landscape, structural, electrical, mechanical and plumbing drawings and specifications for additional information. If Deductive Alternate No. 3 is accepted, 944 SF (+/-) of building area from building 'N' (Team Room and Storage / laundry Room) is deleted from the project. Refer to new layouts without the Team room and Storage / Laundry Room in the trades referenced above.

FINISH LEGEND - BASIS OF DESIGN

KEY NAME	DESCRIPTION	MANUFACTURER	STYLE	COLOR	SIZE	COMMENTS
ACT-IV	ACOUSTIC CEILING TILE	ARMSTRONG CEILINGS	CLEAN ROOM VL NO. 868	WHITE	24"x48"	
ACT-V	ACOUSTIC CEILING TILE	ARMSTRONG CEILINGS	SCHOOL ZONE FINE FISSURED NO. 1713	WHITE	24"x48"	
AP-1	ACOUSTICAL WALL PANEL	ARMSTRONG WORLD INDUSTRIES	TECTUM DESIGNART	MATCH ADJACENT WALL	24"x24"	
AP-2	ACOUSTICAL WALL PANEL	ARMSTRONG WORLD INDUSTRIES	TECTUM DESIGNART	MATCH ADJACENT WALL	36"x48"	
FRP-1	FIBERGLASS REINFORCED PANELING	NUDO	SMOOTH	WHITE		
MCM-1	METAL COMPOSITE WALL PANELS	NICHIHA	ILLUMINATION	CUSTOM COLOR	18"x72"	
P-1	PAINT (EXTERIOR)	RO'S PRECISE	VP59-2507	PARLIER STUCCO BEIGE		
P-2	PAINT (EXTERIOR)	RO'S PRECISE	VP5-2445	PITT (LOYAL ROYAL)		
P-3	PAINT (EXTERIOR)	RO'S PRECISE	VP59-2508	EARTHY RUSSET		
P-4	PAINT	PPG		OATMEAL PPG1023-1		
P-5	PAINT	SHERWIN WILLIAMS		INKY BLUE SW9149		
P-6	PAINT	BENJAMIN MOORE		CHELSEA GRAY HC-168		
PRT-1	TOILET PARTITION	SCRANTON PRODUCTS	ORANGE PEEL	CHARCOAL GRAY		
RTB-1	RUBBER BASE	MOHAWK GROUP		BLACK BROWN 099	4"	
~~S-1~~	~~SOLID SURFACE~~	~~CORIAN~~				
TL-1	TILE (WALL)	DALTILE	COLOR WHEEL LINEAR	MATTE BUSCUIT	8"x24"	1
TL-2	TILE (WALL)	DALTILE	COLOR WHEEL LINEAR	SEA BREEZE	8"x24"	1
TL-3	TILE (WALL)	DALTILE	COLOR WHEEL LINEAR	MUSTARD	8"x24"	1
TL-4	TILE (FLOOR)	DALTILE	VOLUME 1.0	STEREO GRAY	12"x12"	2, 4
TL-5	TILE (WALL)	DALTILE	NATURAL HUES	TUSCANY NH74	6"x12"	6
TL-6	TILE (WALL)	DALTILE	NATURAL HUES	CARRARA NH33	6"x12"	6
TL-7	TILE (FLOOR)	DALTILE	QUETREAD & PAVER	BEIGE 0024 (2)	6"x6"	2, 3
TL-8	EXTERIOR FLOOR TILE	DALTILE	KEYSTONE	MUSTARD D181	1"x1"	5
TL-9	EXTERIOR FLOOR TILE	CROSSVILLE	BELJIN	BLACK IRON	24"x24"	5
TL-10	EXTERIOR FLOOR TILE	CROSSVILLE	BELJIN	TOASTED WAFFLE	2"x 2"	5

GENERAL FINISHES NOTES

1. FINISH SCHEDULES ARE TO BE COORDINATED WITH THE FINISH LEGEND.
2. SEE REFLECTED CEILING PLANS FOR CEILING FINISHES.
3. ALL PAINT COLOR CHANGES SHOULD ALWAYS OCCUR AT INTERIOR CORNERS.
4. ALL HARD LID CEILINGS TO BE PAINTED WITH P-4, UNLESS OTHERWISE NOTED.
5. ALL GYPSUM BOARD WALLS TO BE PAINTED WITH P-4 UNLESS OTHERWISE NOTED.
6. SEE INTERIOR ELEVATION SHEETS FOR ALL "ACCENT" PAINT LOCATIONS AND PAINT TRANSITIONS NOT CLARIFIED ON FINISH SCHEDULE.
7. ALL FLOORS IN PUBLIC AREA SHALL HAVE NON-SLIP SURFACE IN COMPLIANCE WITH DIVISION 18 OF HEALTH AND SAFETY CODES OF THE STATE OF CALIFORNIA.
8. PAINT ALL REGISTERS, GRILLES, LOUVERS, VENTS, ETC. VERIFY COLOR w/ ARCHITECT.
9. INSTALL PROPER SCHLUTER STRIP AT FLOOR MATERIAL TRANSITIONS PER MANUFACTURER RECOMMENDATION.
10. ALL FINISHES SHALL COMPLY WITH FLAME SPREAD AND SMOKE DEVELOPED REQUIREMENTS PER CBC 2016, 803.1.1 & 803.11
11. ALL EXPOSED/ SEALED/ POLISHED CONCRETE FLOORING SHALL BE PROTECTED FROM EQUIPMENT/ DAMAGE DURING CONSTRUCTION.
12. WALL FINISHES ARE TYPICAL AS INDICATED, INCLUDING BUT NOT LIMITED TO WING WALLS, ALCOVES, ETC. U.O.N.
13. THIS SCHEDULE IS PROVIDED FOR THE CONVENIENCE OF THE CONTRACTOR. FIELD VERIFY ALL CONDITIONS AND DIMENSIONS PRIOR TO FABRICATION, INSTALLATION OR APPLICATION.
14. REFER TO APPROPRIATE SPECIFICATION SECTIONS FOR MATERIALS, SYSTEM AND TYPES.
15. ALL DETAILS, MATERIALS AND FINISHES SHALL BE CONSIDERED "TYPICAL" FOR ALL SIMILAR CONDITIONS, UNLESS OTHERWISE NOTED.
16. PAINTING SCOPE OF WORK AT BUILDING INTERIORS IS LIMITED TO ALL NEW ITEMS THAT ARE PART OF THIS PROJECT ONLY, UNLESS OTHERWISE NOTED.
17. LOUVERS/GRILLS LOCATED IN WALL TO MATCH ADJACENT WALL COLOR.
18. UNLESS OTHERWISE NOTED ON SPECIFIC SCHEDULES, COLOR OF ALL MISCELLANEOUS METAL, EXPOSED CONDUITS, EXPOSED MECHANICAL AND ELECTRICAL ITEMS RECEIVING FIELD FINISH SHALL MATCH COLOR OF ADJACENT MATERIAL.
19. ALL INTERIOR DOORS & FRAMES TO BE PAINTED WITH P-2 UNLESS OTHERWISE NOTED.
20. ALL INTERIOR PAINT SHALL BE SATIN ENAMEL UNLESS OTHERWISE NOTED.
21. ALL PAINT IN STORAGE ROOM AND RESTROOMS SHALL BE SEMI-GLOSS UNLESS OTHERWISE NOTED.
22. ALL EXTERIOR DOOR & DOOR FRAMES TO MATCH EXISTING COLOR.
23. CERAMIC TILE BASE SHALL BE INSTALLED SO THAT GROUT JOINTS ALIGN WITH ADJACENT WALL TILE GROUT JOINTS TO THE GREATEST EXTENT PRACTICABLE. CONTRACTOR SHALL REVIEW TILE LAYOUT PRIOR TO INSTALLATION AND MAKE MINOR ADJUSTMENTS AS NECESSARY TO ACHIEVE VISUAL ALIGNMENT. ANY CONDITIONS PREVENTING ALIGNMENT SHALL BE BROUGHT TO THE ARCHITECT'S ATTENTION PRIOR TO INSTALLATION.

BASIS OF DESIGN COMMENTS

1. GROUT COLOR SHALL BE:
   CUSTOM BUILDING PRODUCTS
   COLOR GROUT
   #543 DRIFTWOOD
2. GROUT COLOT SHALL BE:
   CUSTOM BUILDING PRODUCTS
   PRISM SURE COLOR GROUT
   #335 WINTER GRAY
3. QUARRY TILE BASE: Q-3565 COVE BASE - BEIGE (5" x 6")
4. CERAMIC TILE BASE: P-36C9 COVE BASE - STEREO GREY (6" x 12")
5. REFER TO SHEET AS2.1
6. REFER TO EXTERIOR ELEVATIONS

FLOOR FINISH LEGEND

03 35 00.SC1
SEALED CONCRETE

03 35 43.PC1
POLISHED CONCRETE

09 30 00.TL-4
CERAMIC TILE FLOORING

09 30 00.TL-7
QUARRY TILE FLOORING

NOTE: PATTERNS ARE FOR REPRESENTATION ONLY, NOT FOR INSTALLATION.

BATHROOM TILE PATTERN

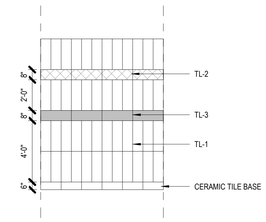

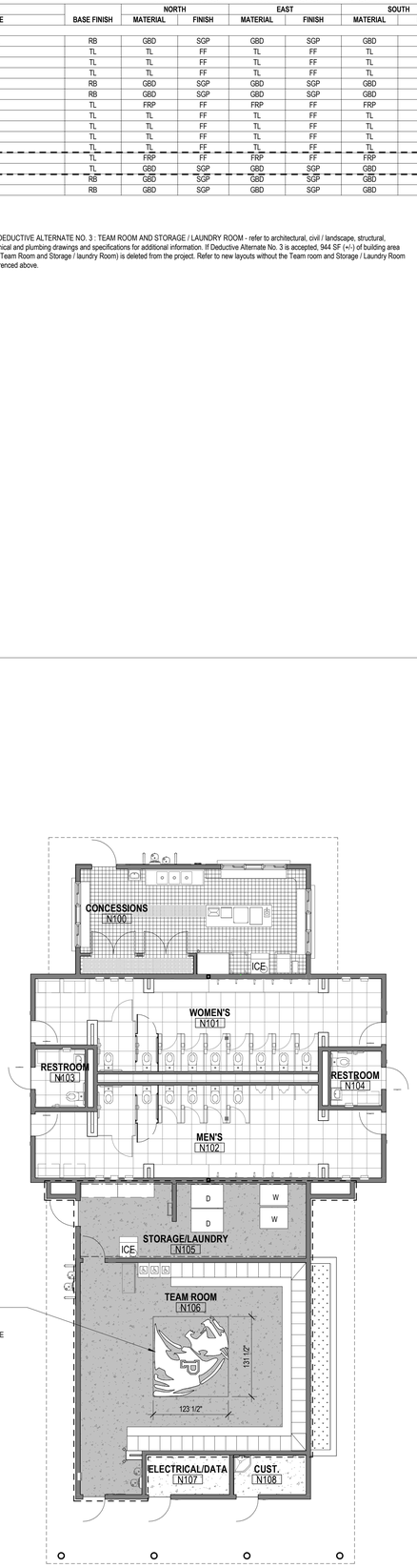

PAINTING AND COATING: PAINTED TEAM ROOM FLOOR LOGO

NOTE: ELECTRONIC FILE WILL BE MADE AVAILABLE TO CONTRACTOR

A18 BUILDING N FINISH FLOOR PLAN
1/8" = 1'-0"

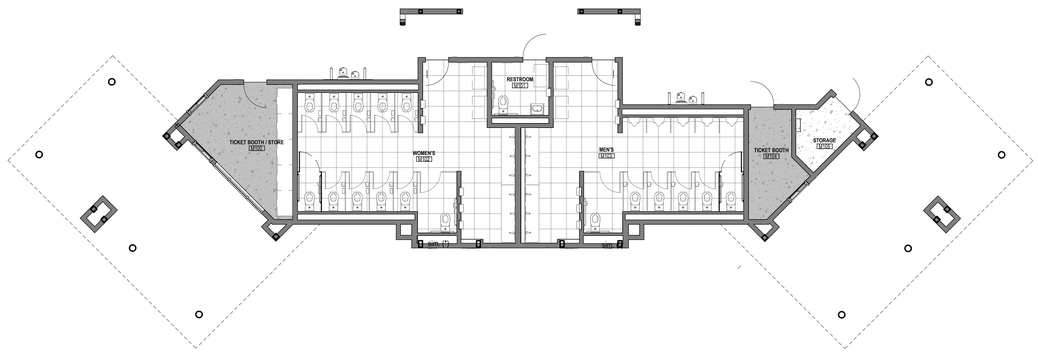

A12 BUILDING M FINISH FLOOR PLAN
1/8" = 1'-0"

PBK
www.pbk.com
559-448-8400
FRESNO, CA

PARLIER HS STADIUM REPLACEMENT

603 3rd Street
Parlier, CA 93648

CLIENT PROJECT NO.: 250093

DSA SUBMISSION
DSA APPL. NO.: 02-124002 DSA FILE NO.: 10-H12

PARLIER UNIFIED SCHOOL DISTRICT

LICENSED ARCHITECT
MICHELE GARGANO
No. C-32550
RENEWAL DATE
MAR 31, 2027
STATE OF CALIFORNIA

CLIENT
PARLIER UNIFIED SCHOOL DISTRICT

DATE	PROJECT NUMBER
2026/02/09	250093

DRAWING HISTORY

No.	Description	Date
2	Addendum #2	2026-05-28

CHECKED BY: Checker

DRAWN BY: Author

INTERIOR FINISH SCHEDULES

AX7.1

Plot Stamp:
6/23/2026 9:34:47 AM

PROJECT INFORMATION
SX0.1
FOR BLUEBEAM LABELING/OCR:

0"
1"

MATERIAL SPECIFICATIONS

GENERAL

ALL WORK SHALL CONFORM TO THE REQUIREMENTS OF THE GOVERNING CODE. SEE 'PROJECT DATA'

CONSTRUCTION LIABILITY
THE CONSTRUCTION CONTRACTOR AND HIS SUBCONTRACTORS AGREE THAT IN ACCORDANCE WITH GENERALLY ACCEPTED CONSTRUCTION PRACTICES, THE CONSTRUCTION CONTRACTOR AND HIS SUBCONTRACTORS WILL BE REQUIRED TO ASSUME SOLE AND COMPLETE RESPONSIBILITY FOR JOB SITE CONDITIONS DURING THE COURSE OF CONSTRUCTION OF THE PROJECT, INCLUDING SAFETY OF ALL PERSONS AND PROPERTY; THAT THIS REQUIREMENT SHALL BE MADE TO APPLY CONTINUOUSLY AND NOT LIMITED TO NORMAL WORKING HOURS, AND THE CONSTRUCTION CONTRACTOR AND HIS SUBCONTRACTORS FURTHER AGREE TO DEFEND, INDEMNIFY AND HOLD THE DESIGN PROFESSIONAL HARMLESS FROM ANY LIABILITY, REAL OR ALLEGED, IN CONNECTION WITH THE PERFORMANCE OF WORK ON THIS PROJECT, EXCEPT LIABILITY ARISING FROM THE SOLE NEGLIGENCE OF THE DESIGN PROFESSIONAL.

CONCRETE & REINFORCING

REINFORCING STEEL
BARS FOR REINFORCING SHALL BE GRADE 60 DEFORMED BARS CONFORMING TO ASTM A706 OR A615. ASTM A615 GRADE 60 REQUIRES 80,000 PSI MINIMUM TENSILE STRENGTH WITH 1.10 MINIMUM RATIO OF ACTUAL TENSILE STRENGTH TO ACTUAL YIELD STRENGTH BASED ON MILL TESTING. LAP SPLICES SHALL BE IN ACCORDANCE WITH ACI 318, CURRENT EDITION UNLESS NOTED OTHERWISE ON THE PLANS. BARS TO BE WELDED OR FIELD BENT SHALL CONFORM TO ASTM A706.

CONCRETE
CONCRETE SHALL BE CONSTRUCTED IN ACCORDANCE WITH THE **2019** EDITION OF
ACI 301 & 318. CONCRETE SHALL BE READY-MIXED CONCRETE IN ACCORDANCE WITH ASTM C94.

MAXIMUM WATER-CEMENT RATIO, BY WEIGHT

28 DAY COMPRESSIVE STRENGTH	WATER-CEMENT RATIO
3500 PSI CONCRETE	0.45
3000 PSI CONCRETE	0.50

AVERAGE DRYING SHRINKAGE FOR CONCRETE AFTER 21 DAYS OF DRYING SHALL NOT EXCEED 0.048% IN SLABS ON GRADE.

AT THE CONTRACTOR'S OPTION, AN AIR ENTRAINING AGENT CONFORMING TO THE LATEST REVISION OF ASTM SPECIFICATION C260 MAY BE ADDED TO THE CONCRETE TO PROVIDE UP TO A MAXIMUM OF 3% ± 1.5% ENTRAINED AIR. CEMENT SHALL BE IN ACCORDANCE WITH THE STANDARD SPECIFICATIONS FOR PORTLAND CEMENT PER ASTM DESIGNATION C150, TYPE II. NO MORE THAN 15% BY WEIGHT OF CEMENT MAY BE REPLACED BY FLY ASH CONFORMING TO ASTM C618, CLASS N OR F.

CONCRETE ELEMENT	MIN 28 DAY COMPRESSIVE STRENGTH	MAX SIZE AGGREGATE (INCHES)	SLUMP (INCHES)
FOOTINGS	3000	1-1/2	3
SLABS ON GRADE	3500	1	4

SLUMP WILL BE MEASURED AT THE TRUCK DISCHARGE. SLUMPS NOTED ABOVE ARE FOR CONCRETE WITHOUT ADMIXTURES TO BE CONSOLIDATED USING VIBRATION. FORMWORK CONSTRAINTS, CONGESTION OF REBAR, AND PUMPING OF CONCRETE MAY REQUIRE INCREASED SLUMP BEYOND THE SLUMP LISTED ABOVE. THE CONTRACTOR SHALL ADJUST THE SLUMP UP TO 8" MAX USING ADMIXTURES AS NECESSARY TO PROVIDE WORKABILITY AND CONSISTENCY TO PERMIT CONCRETE TO BE WORKED READILY INTO FORMS AND AROUND REINFORCEMENT UNDER CONDITIONS OF PLACEMENT TO BE EMPLOYED WITHOUT SEGREGATION OR EXCESSIVE BLEEDING. ALL ADMIXTURES SHALL BE NOTED IN THE SUBMITTED MIX DESIGN AND ARE SUBJECT TO THE ENGINEER'S REVIEW. THE SPECIAL INSPECTOR SHALL BE PROVIDED WITH A BATCH TICKET AND WEIGHT TAG UPON DELIVERY OF EACH LOAD OF CONCRETE.

ALL CONCRETE SHALL BE PLACED WITH MECHANICAL VIBRATION UNLESS NOTED OTHERWISE.

EXPOSURE CATEGORIES AND CLASSES FOR ALL CONCRETE TYPES ARE AS FOLLOW:
A. FREEZING AND THAWING: CLASS: F0
B. SULFATE EXPOSURE: CLASS: S0
C. IN CONTACT WITH WATER: CLASS: W0
D. CORROSION PROTECTION OF REINFORCEMENT: CLASS: C1

SLAB MEMBRANE - 15 MIL POLYETHYLENE FILM, UNLESS NOTED OTHERWISE.

UNDER SLAB MATERIALS
SLAB MEMBRANE SHALL BE 15 MIL POLYETHYLENE FILM, UNLESS NOTED OTHERWISE. LAP SLAB MEMBRANE PER THE MANUFACTURER'S RECOMMENDATIONS, BUT NO LESS THAN 12 INCHES.

GRAVEL SHALL BE 3/4" CLEAN MATERIAL MEETING THE REQUIREMENTS OF ACI 302.1R.

NON-SHRINK GROUT
NON SHRINK GROUT SHALL BE FLOWABLE, WITH A MINIMUM 7 DAY COMPRESSIVE STRENGTH OF 5000 PSI. NON-SHRINK GROUT SHALL BE MASTERFLOW 928 GROUT AS MANUFACTURED BY BASF OR APPROVED EQUAL.

POST INSTALLED ANCHORS

EXISTING CONCRETE SURFACES SHALL BE SCANNED PER "AS-BUILT INFORMATION" ON **S0.01** TO ENSURE EXISTING REINFORCEMENT REMAINS UNDAMAGED DURING POST INSTALLED ANCHOR INSTALLATION.

MECHANICAL ANCHORING SYSTEMS FOR CONCRETE
MECHANICAL ANCHORING SYSTEMS SHALL BE
- SIMPSON TITEN HD (ICC ESR-2713)
- APPROVED EQUAL

INSTALLATION OF ANCHORS INCLUDING DRILLING AND CLEANING OF HOLES SHALL BE IN ACCORDANCE WITH THE CURRENT ICC OR IAPMO REPORT

ADHESIVE ANCHORING SYSTEMS FOR CONCRETE
ADHESIVE ANCHORING SYSTEMS SHALL BE:
- HILTI HIT-RE 500 V3 (ICC ESR-3814) OR HIT-HY 200 **A or R *(choose)*** (ICC ESR 3187)
- SIMPSON SET-XP (ICC ESR-2508) OR AT-XP (IAPMO UES ER-263)
- DEWALTPOWERS PURE 110+ (ICC ESR-3298) OR AC100+ GOLD (ICC ESR-2582)
- APPROVED EQUAL.

INSTALLATION OF ANCHORS AND ADHESIVE INCLUDING DRILLING AND CLEANING OF HOLES SHALL BE IN ACCORDANCE WITH **CBC 1910A.5.4** AND THE CURRENT ICC OR IAPMO REPORT. ADHESIVES SHALL BE USED ONLY IN APPLICATIONS PERMITTED BY THE ADHESIVE'S ICC OR IAPMO REPORT. ADHESIVE ANCHORS SHALL BE INSTALLED IN CONCRETE HAVING A MINIMUM AGE OF 21 DAYS AT TIME OF ANCHOR INSTALLATION.

EXPANSION ANCHORS FOR CONCRETE
EXPANSION ANCHORS SHALL BE:
- HILTI KWIK BOLT TZ2 ANCHORS (ICC ESR-4266).
- SIMPSON STRONG BOLT 2 WEDGE ANCHOR (ICC ESR-3037)
- DEWALTPOWERS POWER-STUD+ SD2 (ICC ESR-2502)
- APPROVED EQUAL.

CONTRACTOR SHALL TORQUE ANCHORS IN ACCORDANCE WITH THE ICC OR IAPMO REPORT. EXPANSION ANCHORS SHALL USE WASHERS SIZED TO PREVENT CRUSHING OF THE ATTACHED MEMBER UNDER THE INSTALLATION TORQUE.

STRUCTURAL STEEL

STRUCTURAL STEEL AND MISCELLANEOUS IRON
STRUCTURAL STEEL AND MISCELLANEOUS IRON SHALL BE CONSTRUCTED IN ACCORDANCE WITH THE CURRENT EDITION OF THE AISC CODE OF STANDARD PRACTICE.

1. HOLLOW STRUCTURAL SECTIONS SHALL CONFORM TO ASTM A500, GRADE C.
2. STRUCTURAL PLATE SHALL CONFORM TO ASTM A36 OR ASTM A572 GR50.

ALL STRUCTURAL STEEL AND MISCELLANEOUS IRON SHALL RECEIVE SHOP PRIME COAT EXCEPT ON SURFACES RECEIVING WELDS, EMBEDDED IN CONCRETE, OR AT SLIP CRITICAL HIGH STRENGTH BOLTS WHICH SHALL BE TOUCHED UP AFTER CONNECTION IS COMPLETE. STRUCTURAL STEEL AND MISCELLANEOUS IRON WHICH IS TO HAVE SPRAY ON FIREPROOFING SHALL NOT BE PAINTED. STRUCTURAL STEEL PERMANENTLY EXPOSED TO WEATHER SHALL RECEIVE TWO COATS OF SEMI-GLOSS ALKYD ENAMEL COMPATIBLE WITH PRIMER.

MACHINE BOLTS, ANCHOR BOLTS AND THREADED RODS
BOLTS, NUTS, WASHERS AND RODS PERMANENTLY EXPOSED TO WEATHER SHALL BE HOT DIPPED GALVANIZED.

1. BOLTS SHALL CONFORM TO ASTM A307 GRADE A OR B OR A36.
2. ANCHOR BOLTS AND RODS SHALL CONFORM TO ASTM F1554 GR 36.
3. ALL BOLTS & LAG SCREWS SHALL HAVE STANDARD STEEL WASHERS, U.N.O.
4. NUTS SHALL BE AS SHOWN BELOW AND FINISH SHALL MATCH FASTENER.
5. BOLT HOLES SHALL BE STANDARD SIZE (BOLT DIA + 1/16") TYP, U.N.O.

FASTENER GRADE AND SIZE	NUT CLASS	NUT STYLE
ASTM A36 , ASTM A307A, F1554 1/4" TO 1-1/2"	ASTM A563-A	HEX
ASTM A36 , ASTM A307A, F1554, OVER 1-1/2" TO 4"	ASTM A563-A	HEAVY HEX
ASTM A307B, 1/4" TO 4"	ASTM A563-A	HEAVY HEX

WELDING
ALL WELDING SHALL BE PERFORMED BY CERTIFIED WELDERS PER AWS "STANDARD QUALIFICATION PROCEDURE" TO PERFORM THE TYPE OF WORK REQUIRED. ALL WELDING SHALL BE IN ACCORDANCE WITH THE CURRENT AWS WELDING CODE. ARC WELDING ELECTRODES SHALL BE E70 SERIES FOR A36, A53, A500, A572 & A992 MATERIAL, AND E80 SERIES FOR A706 REINFORCING STEEL.

WELD METAL TOUGHNESS SHALL BE REPORTED ON THE ELECTRODE MANUFACTURER'S CERTIFICATE OF COMPLIANCE. ALL ELECTRODES SHALL BE LOW HYDROGEN WITH A MINIMUM CVN VALUE OF 20 FT-LBS AT -20 DEGREE F. EXCEPTIONS: METAL DECK WELDING, STAIR AND HANDRAIL WELDING, LIGHT GAGE STEEL WELDING.

TACK WELDS, AIR-ARC GOUGING AND FLAME CUTTING SHALL NOT BE PERFORMED WITHOUT ADEQUATE PREHEAT OR INCORPORATION INTO THE FINAL WELD.

THE FILLER METAL MANUFACTURER'S PUBLISHED RECOMMENDATIONS SHALL BE THE BASIS FOR DETERMINING THE ALLOWABLE RANGE OF ESSENTIAL VARIABLES FOR THE PRE QUALIFIED WPS. UNLESS NOTED OTHERWISE ON THE PLANS, BACK-UP BARS FOR CJP WELDS SHALL BE REMOVED FOLLOWED BY BACKGOUGING AND BACKWELDING.

DEMAND CRITICAL WELDS
WELDS IDENTIFIED ON DRAWINGS AS 'DCW' SHALL COMPLY WITH THE FOLLOWING:
-DEMAND CRITICAL WELDS SHALL CONFORM TO THE REQUIREMENTS OF AISC 341 AND AWS D1.8. WELDING FILLER METALS SHALL BE SUITABLE FOR DEMAND CRITICAL APPLICATIONS AND SHALL EXHIBIT A MINIMUM CHARPY V-NOTCH (CVN) TOUGHNESS OF 20 FT-LB AT 0°F . WELDING SHALL BE PERFORMED IN ACCORDANCE WITH APPROVED WELDING PROCEDURE SPECIFICATIONS (WPSS) MEETING THE REQUIREMENTS OF AWS D1.8.
-FILLER METALS FOR DEMAND CRITICAL WELDS SHALL COMPLY WITH THE HEAT INPUT ENVELOPE QUALIFICATION REQUIREMENTS OF AISC 341 SECTION 9.1(4)(B).
-DEMAND CRITICAL WELDS SHALL BE IDENTIFIED ON THE SHOP DRAWINGS AND FABRICATION DOCUMENTS.

AUTOMATIC END WELDED STUDS
AUTOMATIC END WELDED STUDS SHALL BE NELSON GRANULAR FLUX-FILLED S3L SHEAR CONNECTORS OR CFL FULLY THREADED STUDS (OR APPROVED EQUAL).

1. STUDS SHALL CONFORM TO ASTM A108, GRADES C1010 THROUGH C1020, COLD DRAWN STEEL.
2. HEADED ANCHOR STUDS SHALL BE AWS D1.1 TYPE B.
3. THREADED STUDS SHALL BE AWS D1.1 TYPE A.
4. ALL THREADED STUDS SHALL HAVE STANDARD STEEL WASHERS, U.N.O.

THE STUDS SHALL BE AUTOMATICALLY END WELDED IN ACCORDANCE WITH THE MANUFACTURER'S RECOMMENDATIONS IN SUCH A MANNER AS TO PROVIDE COMPLETE FUSION BETWEEN THE END OF THE STUD AND THE PLATE. THERE SHOULD BE NO POROSITY OR EVIDENCE OF LACK OF FUSION BETWEEN THE WELDED END OF THE STUD AND THE PLATE. THE STUD SHALL DECREASE IN LENGTH DURING WELDING APPROXIMATELY 1/8" FOR 5/8" DIAMETER AND UNDER, AND 3/16" FOR OVER 5/8" DIAMETER. WELDING SHALL BE DONE BY QUALIFIED WELDERS APPROVED BY THE WELDING INSPECTOR.

WOOD FRAMING

SAWN LUMBER
DOUGLAS FIR COAST REGION, CONFORMING TO WEST COAST LUMBER INSPECTION
BUREAU STANDARD GRADING AND DRESSING RULE No. 17, AS AMENDED TO DATE.

MOISTURE CONTENT SHALL BE LESS THAN 19% FROM THE TIME OF INSTALLATION ONWARD.

1. 2x, 3x, 4x PLATES, JOISTS, PURLINS AND BEAMS, No. 1 & BETTER, UNLESS NOTED OTHERWISE ON THE DRAWINGS.
2. 2x, 3x, 4x PLATES, JOISTS, PURLINS AND BEAMS, SELECT STRUCTURAL, WHERE NOTED ON THE DRAWINGS.
3. 6x, & LARGER BEAMS, No. 1 WHEN BEAM WIDTH IS NOT MORE THAN 2" GREATER THAN THICKNESS, THE MEMBER SHALL CONFORM TO ITEM 6 BELOW.
4. 2x, 3x, 4x, LEDGERS, No. 1 UNLESS NOTED OTHERWISE ON THE DRAWINGS.
5. 4x4 AND 4x6 POSTS, No. 1 UNLESS NOTED OTHERWISE ON THE DRAWINGS.
6. 6x6 AND LARGER POSTS, DENSE No. 1, WHEN POST WIDTH IS MORE THAN 2" GREATER THAN THICKNESS, THE MEMBER SHALL CONFORM TO ITEM 3 ABOVE.
7. 2x, 3x, STUDS AND BLOCKING, No. 1
8. FOUNDATION PLATES: PRESSURE TREATED DOUGLAS FIR No. 1.

ALL FRAMING LUMBER 6" OR LARGER IN THE LEAST DIMENSION SHALL BE FOHC.

WOOD FRAMING PERMANENTLY EXPOSED TO WEATHER SHALL BE PRESSURE TREATED.

FASTENERS AND BOLT ASSEMBLIES IN PRESSURE TREATED LUMBER SHALL BE HOT DIPPED ZINC-COATED GALVANIZED STEEL IN COMPLIANCE WITH ASTM A 153.

BOLT HOLES SHALL BE 1/32" MIN TO 1/16" MAX LARGER THAN THE BOLT DIAMETER, U.N.O.

STRUCTURAL COMPOSITE LUMBER
COMPOSITE LUMBER SHALL BE IN CONFORMANCE WITH ASTM D5456 AND ICC ESR-1387. MEMBERS SHALL BE IDENTIFIED BY A STAMP INDICATING THE PRODUCT TYPE AND GRADE, ICC REPORT NUMBER, MANUFACTURER'S NAME, PLANT NUMBER, AND INSPECTION AGENCY'S LOGO.

REDLAM LVL: ICC ESR-2993
- GRADE: 2.0E
- Fb = 2900 PSI TYP, UNO
- Fv = 285 PSI
- E = 2.0 x 10^6 PSI

PLYWOOD
ALL PLYWOOD SHALL CONFORM TO U.S. PRODUCT STANDARD PS 1-19, AMERICAN PLYWOOD ASSOCIATION. EACH SHEET SHALL BE STAMPED WITH THE PS AND/OR APA GRADEMARK.

ALL PLYWOOD PERMANENTLY EXPOSED TO WEATHER SHALL BE EXTERIOR TYPE PLYWOOD.

ALL UNBLOCKED PLYWOOD EDGES SHALL BE TONGUE-AND-GROOVE OR SUPPORTED WITH PLYWOOD CLEATS OR PLYWOOD CLIPS.

ROOF PLYWOOD:
- 5 PLY EXPOSURE 1, CDX, SPAN RATING 32/16, SPECIES GROUP 2 OR BETTER.

WALL PLYWOOD:
- 3 PLY EXPOSURE 1, CDX, SPAN RATING 24/0, SPECIES GROUP 2 OR BETTER.

PRESERVATIVE TREATMENT FOR WOOD
PRESERVATIVE TREATMENT FOR WOOD SHALL BE WATER-BORNE, NON-ARSENIC, NON-CHROMIUM TYPE COMPLYING WITH AWPA STANDARD U1. PRESERVATIVE TREATMENT SHALL NOT CONTAIN PENTACHLOROPHENOL, ARSENIC COMPOUNDS, OR CREOSOTE. AFTER TREATMENT, RE-DRY WOOD TO BE USED IN ENCLOSED LOCATIONS TO A MOISTURE CONTENT OF 19% OR LESS. RETREAT ALL FIELD CUT ENDS AND SURFACES. FASTENERS AND BOLT ASSEMBLIES IN CONTACT WITH PRESSURE TREATED LUMBER SHALL BE HOT DIPPED GALVANIZED IN COMPLIANCE WITH ASTM A153.

FASTENERS FOR EXTERIOR WALL COVERINGS *(DSA ONLY SECTION)*
IN ACCORDANCE WITH THE REQUIREMENTS OF SECTION 2304.10.2.1, FASTENERS AND BOLT ASSEMBLIES USED AT EXTERIOR WALL COVERINGS SHALL BE HOT DIPPED ZINC COATED GALVANIZED IN ACCORDANCE WITH ASTM A153. FASTENERS AT EXTERIOR WALL COVERINGS MAY ALSO BE MECHANICALLY DEPOSITED ZINC COATED IN ACCORDANCE WITH ASTM B695.

LIGHT GAGE METAL CONNECTORS
ALL LIGHT GAGE METAL CONNECTORS SHALL BE SIMPSON STRONG TIE CONNECTORS OR APPROVED EQUAL, UNLESS NOTED OTHERWISE ON THE DRAWINGS. CONNECTORS IN CONTACT WITH PRESSURE TREATED LUMBER TO BE HOT DIPPED ZINC-COATED GALVANIZED STEEL IN COMPLIANCE WITH ASTM A653 OR ASTM A123.
ALL CONNECTORS SHALL BE INSTALLED PER MNFR SPECIFICATIONS TO MAX CAPACITY.

PREFABRICATED WOOD I-JOISTS
1. PREFABRICATED WOOD I-JOISTS SHALL BE RED-I SERIES TRUSS-JOISTS DESIGNED AND MANUFACTURED BY REDBUILT, LLC, (ICC ESR-2994) OR APPROVED EQUAL.
2. THE CONTRACTOR SHALL SUBMIT SHOP DRAWINGS FOR THE WOOD I-JOISTS TO BE INSTALLED AS SHOWN ON THE CONTRACT DRAWINGS, INCLUDING LAYOUT, SIZE OF MEMBERS AND CONNECTION DETAILS. IN ADDITION TO THE ABOVE DRAWINGS, CALCULATIONS SHOWING ALL STRESSES AND DEFLECTIONS CAUSED BY DEAD AND LIVE LOADS SHALL BE SUBMITTED TO THE ENGINEER FOR REVIEW. DRAWINGS AND CALCULATIONS SHALL BE SIGNED BY A CIVIL ENGINEER REGISTERED IN THE STATE OF CALIFORNIA.
3. PREFABRICATED WOOD I-JOISTS DESIGN AND CONSTRUCTION SHALL BE IN ACCORDANCE WITH AN ICC REPORT AND 2025 CALIFORNIA BUILDING CODE (CBC), PART 2, SECTION 2303.4.
4. JOIST MANUFACTURER SHALL OBTAIN ALL NECESSARY APPROVALS FROM THE PUBLIC AGENCIES INVOLVED IN GOVERNING CONSTRUCTION.
5. DESIGN CRITERIA:

LOADING PSF=POUNDS PER SQUARE FOOT

ROOF:	DEAD LOAD	XX PSF + TRUSS WEIGHT
	LIVE LOAD	20 PSF, REDUCED PER CBC

DEFLECTIONS		LIVE LOAD	DEAD + LIVE LOAD	MAXIMUM
ROOF:	CANTILEVER SPAN*	L/300	L/240	1"
	INTERIOR SPAN	L/360	L/240	1"

* AT CANTILEVER, L = 2X CANTILEVER SPAN

STRUCTURAL OBSERVATION

REQUIRED OBSERVATION BY THE STRUCTURAL ENGINEER OF RECORD
1. STEEL ERECTION.
2. ROUGH FRAMING, TRUSSES AND JOISTS.
3. PLYWOOD SHEATHING AND NAILING.

CONTRACTOR SHALL NOTIFY ENGINEER A MINIMUM OF 2 WORKING DAYS PRIOR TO THE TIME WHEN HIS PRESENCE IS REQUIRED. PLEASE NOTE THAT THESE OBSERVATIONS ARE INDEPENDENT OF INSPECTIONS REQUIRED BY THE BUILDING DEPARTMENT.

PROJECT DATA

1. PLANS AND CALCULATIONS FOR THE STRUCTURAL DESIGN WERE BASED UPON:
   - GOVERNING CODE: 2025 CALIFORNIA BUILDING CODE W/ CHAPTER A AMENDMENTS
   - SOILS REPORT: "GEOTECHNICAL INVESTIGATION & GEOHAZARDS STUDY REPORT" PROJECT NUMBER: 11-252521-0 BY CERTERRA SOUTHWEST, LLC DBA CERTERRA RMA GEOSCIENCE, DATED JANUARY 26, 2026
2. VERTICAL LOADS:
   BLDG M ROOF DEAD LOAD = 17.5 PSF
   BLDG N ROOF DEAD LOAD = 17.5 PSF
   ROOF LIVE LOAD = 20 PSF [REDUCIBLE PER CODE]
3. EARTHQUAKE DESIGN DATA:
   EQUIVALENT LATERAL FORCE PROCEDURE
   $V = S_{DS} I\ W$ / R
   $S_S = 0.65$; $S_1 = 0.22$
   $S_{DS} = 0.62$; $S_{D1} = 0.4$

   BUILDING N
   I = 1.25; RISK CATEGORY III
   SITE CLASS = D; SEISMIC DESIGN CAT = D
   SEISMIC RESISTING SYSTEM: LIGHT FRAMED WALLS (WOOD) SHEATHED WITH WOOD STRUCTURAL PANELS RATED FOR SHEAR RESISTANCE
   R = 6.5 ; Ω_0 = 3 ; C_d= 4
   V = 0.119 W [LRFD]

   BUILDING M
   I = 1.00; RISK CATEGORY II
   SITE CLASS = D; SEISMIC DESIGN CAT = D
   CANOPY SEISMIC RESISTING SYSTEM: STEEL SPECIAL CANTILEVER COLUMN
   R = 2.5 ; Ω_0 = 1.25 ; C_d = 2.5

   V = 0.248 W [LRFD]
4. WIND DESIGN DATA:
   BASIC WIND SPEED = 101 MPH
   RISK CATEGORY III
   WIND EXPOSURE = C
   INTERNAL PRESSURE COEFFICIENT = +0.18, -0.18
   DESIGN WIND PRESSURE (q_z) = 18.9 PSF
   WALL COMPONENTS AND CLADDING PRESSURE = +22.3, -24.2 (ZONE 4) -29.8 (ZONE 5) PSF [LRFD]
   ROOF COMPONENTS AND CLADDING PRESSURE = +16.0, -20.4 (ZONE 1'), -35.5 (ZONE 1), -46.8 (ZONE 2), -63.8 (ZONE 3) PSF [LRFD]

   NOTE: COMPONENTS & CLADDING PRESSURES ABOVE ARE WORST CASE PRESSURES BASED ON 10 SF TRIBUTARY AREA AND MAY BE REDUCED PER ASCE 7. POSITIVE AND NEGATIVE PRESSURES SIGNIFY WIND ACTING TOWARD AND AWAY FROM SURFACES, RESPECTIVELY.
5. FOUNDATION DESIGN CRITERIA:
   BEARING PRESSURES:
   DL + LL 2000 PSF
   TOTAL LOAD 2667 PSF
9. SOLAR PANEL ALLOWANCE:
   THE DESIGN HAS ACCOUNTED FOR SOLAR PANELS TO BE LOCATED ON THE ROOF OF BUILDING 'N' IN THE INDICATED SOLAR ZONES ON THE ROOF FRAMING PLAN.
   MAXIMUM SOLAR PANEL ALLOWANCE = 3 PSF

ABBREVIATIONS

ABBREVIATIONS

@	AT
ø	DIAMETER
#	NUMBER
AB	ANCHOR BOLT
ACI	AMERICAN CONCRETE INSTITUTE
AESS	ARCHITECTURALLY EXPOSED STRUCTURAL STEEL
ALT	ALTERNATE
APPROX	APPROXIMATE(LY)
ARCH	ARCHITECT(URAL)
BLDG	BUILDING
BLK	BLOCK
BLKG	BLOCKING
BM	BEAM
BN	BOUNDARY NAILING
BOF	BOTTOM OF FOOTING
BOT	BOTTOM
BVC	BEGIN VERTICAL CURVE
C-C	CENTER TO CENTER
CL	CENTERLINE
CF	CUBIC FOOT
CIDH	CAST IN DRILLED HOLE
CIP	CAST IRON PIPE
CJ	CONSTRUCTION JOINT
CJP	COMPLETE JOINT PENETRATION
CLG	CEILING
CLR	CLEAR, CLEARANCE
CMP	CORRUGATED STEEL PIPE
CMU	CONCRETE MASONRY UNIT
COL	COLUMN
CONC	CONCRETE
CONN	CONNECTION
CONST	CONSTRUCTION
CONT	CONTINUOUS
COORD	COORDINATE
CSK	COUNTERSINK
CY	CUBIC YARD
DBL	DOUBLE
DCW	DEMAND CRITICAL WELD
DET	DETAIL
DF	DOUGLAS FIR
DIAG	DIAGONAL
Ø	DIAMETER
DIST	DISTANCE
DL	DEAD LOAD
DN	DOWN
DO	DITTO
DWG	DRAWING
(E)	EXISTING
EA	EACH
EC	END HORIZONTAL CURVE
ECR	END CURB RETURN
EL	ELEVATION
ELEV	ELEVATOR
EMB	EMBANKMENT
EN	EDGE NAILING
EQ	EQUAL
EVC	END VERTICAL CURVE
EW	EACH WAY
EXIST	EXISTING
EXP	EXPRESSWAY
FBC	FRAMED BEAM CONNECTION
FG	FINISHED GRADE
FIN	FINISH(ED)
FL	FLOW LINE
FND	FOUNDATION
FN	FIELD NAILING
FOC	FACE OF CONCRETE
FOHC	FREE OF HEART CENTER
FOM	FACE OF MASONRY
FOS	FACE OF STUD(S)
FP	FULL PENETRATION
FS	FAR SIDE
FTG	FOOTING
Ga	GAUGE
GALV	GALVANIZED
GLB	GLUE LAMINATED BEAM
H or HT	HEIGHT
HDR	HEADER
HEX	HEXAGONAL
HGR	HANGER
HORIZ	HORIZONTAL
HS	HIGH STRENGTH
HSB	HIGH STRENGTH BOLT
HSS	HOLLOW STRUCTURAL SECTION
ID	INSIDE DIAMETER
INSP	INSPECTION/INSPECTOR
INSUL	INSULATION
JT	JOINT
KIPS	ONE THOUSAND POUNDS
LBS	POUNDS
LF	LINEAR FOOT
LGS	LIGHT GAUGE STEEL
LL	LIVE LOAD
LLBB	LONG LEGS BACK TO BACK
LLH	LONG LEG HORIZONTAL
LLV	LONG LEG VERTICAL
LOC	LOCATION
LOL	LAYOUT LINE
LONGIT	LONGITUDINAL
LS	LAG SCREW(S)
LT	LEFT
LW	LIGHT WEIGHT
MAX	MAXIMUM
MB	MACHINE BOLT(S)
MECH	MECHANICAL
MFR	MANUFACTURER
MIN	MINIMUM, MINUTES
MISC	MISCELLANEOUS
MOD	MODIFIED OR MODIFY
(N)	NEW
NIC	NOT IN CONTRACT
No.	NUMBER
Ø	NOMINAL DIAMETER
NOM	NOMINAL
NS	NEAR SIDE
NTS	NOT TO SCALE
O.C.	ON CENTER
OD	OUTSIDE DIAMETER
OG	ORIGINAL GROUND
OH	OPPOSITE HAND
OPP	OPPOSITE
OWSJ	OPEN WEB STEEL JOIST
PL	STEEL PLATE
PC	POINT OF CURVATURE
PCC	POINT OF COMPOUND CURVE OR PORTLAND CEMENT CONCRETE
PCP	PERFORATED CONCRETE PIPE
PCVC	POINT OF COMPOUND VERTICAL CURVE
PDF	POWDER DRIVEN FASTENER
PG	PROFILE GRADE
PI	POINT OF INTERSECTION
PJP	PARTIAL JOINT PENETRATION
P/L	PROPERTY LINE
PL	PLATE
PLY	PLYWOOD
POC	POINT ON HORIZONTAL CURVE
POT	POINT ON TANGENT
POVC	POINT ON VERTICAL CURVE
PRC	POINT OF REVERSE CURVE
PRVC	POINT OF REVERSE VERTICAL CURVE
PSF	POUNDS PER SQUARE FOOT
PSI	POUNDS PER SQUARE INCH
PT	POINT OR POST TENSION
PTDF	PRESSURE TREATED DOUGLAS FIR
PVC	POLYVINYL CHLORIDE
RAD or R	RADIUS
RCP	REINFORCED CONCRETE PIPE
REINF	REINFORCED, REINFORCING
REQ'D	REQUIRED
REV	REVISION
RS	ROUGH SAWN
RT	RIGHT
RW	RETAINING WALL
RWD	REDWOOD
R/W	RIGHT OF WAY
SAD	SEE ARCHITECTURAL DRAWINGS
SCHED	SCHEDULE
SEC	SECTION
SHT	SHEET
SHTG	SHEATHING
SIM	SIMILAR
SLRS	SEISMIC LOAD RESISTING SYSTEM
SM	SHEET STEEL
SMS	SHEET STEEL SCREW
SPEC(S)	SPECIFICATION(S)
SQ	SQUARE
SQFT	SQUARE FOOT
SQYD	SQUARE YARD
STAG	STAGGERED
STD	STANDARD
STL	STEEL
STRUCT	STRUCTURAL
STS	SELF TAPPING SCREW
SYM	SYMMETRICAL
T&G	TONGUE AND GROOVE
TBR	TO BE REMOVED
TEMP	TEMPORARY
TO	TOP OF
TOF	TOP OF FOOTING
TOP	TOP OF PLATE
TOS	TOP OF SLAB OR STEEL
TOW	TOP OF WALL
TRANS	TRANSVERSE
TYP	TYPICAL
U.N.O.	UNLESS NOTED OTHERWISE
VC	VERTICAL CURVE
VERT	VERTICAL
W/	WITH
WF	WIDE FLANGE
WP	WATERPROOF or WORKPOINT
WT	WEIGHT
WWF	WELDED WIRE FABRIC

GENERAL NOTES

1. CONSIDER GENERAL NOTES AS APPLYING TO ALL DRAWINGS.
2. DO NOT SCALE DRAWINGS. SCALE SHOWN FOR REFERENCE ONLY.
3. THE CONTRACTOR SHALL REFER TO THE PROJECT SPECIFICATIONS IN CONJUNCTION WITH THE STRUCTURAL DRAWINGS.
4. THE CONTRACTOR IS RESPONSIBLE FOR COORDINATION OF THE STRUCTURAL WORK WITH THE ARCHITECTURAL, CIVIL, AND MEP CONTRACT DOCUMENTS, AS WELL AS ANY OTHER APPLICABLE TRADES. OMISSIONS OR CONFLICTS BETWEEN VARIOUS ELEMENTS OF THE DRAWINGS, NOTES, AND DETAILS SHALL BE BROUGHT TO THE ATTENTION OF THE ARCHITECT AND RESOLVED PRIOR TO BIDDING AND PROCEEDING WITH THE WORK.
5. THE CONTRACTOR IS SOLELY RESPONSIBLE FOR THE DESIGN, INSTALLATION, AND REMOVAL OF TEMPORARY BRACING AND CONSTRUCTION SUPPORTS REQUIRED TO COMPLETE THE PROJECT. NO PORTION OF THE STRUCTURE SHALL BE CONSIDERED TO BE SELF SUPPORTING UNTIL THE ENTIRE VERTICAL AND LATERAL LOAD RESISTING SYSTEM IS IN PLACE.
6. THE CONTRACTOR SHALL PROTECT AND SHORE ALL EXCAVATIONS WITH BRACING AND SHORING AS REQUIRED TO MAINTAIN SOIL STABILITY.
7. CONSTRUCT THOSE FEATURES OF THE PROJECT, WHICH MAY NOT BE FULLY SHOWN, IN MANNER SIMILAR TO THAT USED FOR SIMILAR FEATURES.
8. CENTERLINES OF COLUMNS AND FOUNDATIONS COINCIDE WITH GRID LINE INTERSECTIONS, U.N.O.
9. CENTERLINES OF FOUNDATION GRADE BEAMS COINCIDE WITH CENTERLINES OF WALLS, U.N.O.
10. CENTERLINES OF FRAMING MEMBERS COINCIDE WITH COLUMN CENTERLINES, U.N.O.
11. THE CONTRACTOR SHALL SUBMIT SHOP DRAWINGS SHOWING PROPOSED FOUNDATION CONSTRUCTION JOINT LOCATIONS, DETAILS, AND THE PLACEMENT SEQUENCE FOR THE STRUCTURAL ENGINEER'S APPROVAL PRIOR TO PROCEEDING WITH WORK.
12. NO CONSTRUCTION JOINTS WILL BE PERMITTED IN BEAMS, WAL

TESTING AND SPECIAL INSPECTIONS
SX0.2
FOR BLUEBEAM LABELING/OCR:

0"
1"

TESTING & SPECIAL INSPECTIONS

REQUIRED STRUCTURAL SPECIAL INSPECTION (DSA)

GENERAL NOTES

- THE FOLLOWING TABLE OF SPECIAL INSPECTIONS AND TESTING ARE DERIVED FROM THE STRUCTURAL PROVISIONS OF THE CBC AND REFERENCED STANDARDS AND ARE FOR REFERENCE ONLY. AT A MINIMUM, ALL SPECIAL INSPECTIONS REQUIRED BY THE CALIFORNIA BUILDING CODE (CBC) SHALL BE PROVIDED. THE FOLLOWING TABLES ARE NOT INTENDED TO BE ALL INCLUSIVE, AND ARE PROVIDED FOR THE CONVENIENCE OF THE DISTRICT, TESTING AGENCY AND CONTRACTOR IN DEVELOPING THE SCOPE OF WORK FOR REQUIRED TESTING AND INSPECTION OF STRUCTURAL MATERIALS AND COMPONENTS. FINAL DEFINITION OF THIS SCOPE OF WORK IS TO BE DETERMINED BY THE TESTING AGENCY AND THE DISTRICT.
- THE OWNER SHALL EMPLOY A SPECIAL INSPECTOR AND PROJECT INSPECTOR (IOR) DURING CONSTRUCTION ON THE FOLLOWING TYPES OF WORK AND AS NOTED IN DSA FORM 103. THE INSPECTIONS NOTED BELOW SHALL BE PERFORMED BY THE SPECIAL INSPECTOR UNLESS NOTED AS "IOR".

SPECIAL INSPECTOR

- THE SPECIAL INSPECTOR SHALL BE A QUALIFIED PERSON WHO SHALL DEMONSTRATE TO HIS COMPETENCE, TO THE SATISFACTION OF THE DIVISION OF THE STATE ARCHITECT, FOR INSPECTION OF A PARTICULAR TYPE OF CONSTRUCTION OR OPERATION REQUIRING SPECIAL INSPECTION.
- TESTING AND INSPECTIONS WILL BE PERFORMED BY AN INDEPENDENT TESTING LABORATORY SELECTED AND EMPLPOYED BY THE DISTRICT AND APPROVED BY THE DIVISION OF THE STATE ARCHITECT (DSA). QUALIFICATION OF A TESTING AGENCY OR LABORATORY WILL BE UNDER THE JURISDICTION OF THE DSA STRUCTURAL SAFETY SECTION (SSS). PROCEDURAL AND ACCEPTANCE CRITERIA ARE SET FORTH IN 2025 CALIFORNIA ADMINISTRATIVE CODE (CAC) SEC 4-333(c) AND 2025 CALIFORNIA BUILDING CODE (CBC) SEC. 1704A.2.

DUTIES AND RESPONSIBILITIES OF THE SPECIAL INSPECTOR

- THE SPECIAL INSPECTOR SHALL OBSERVE THE WORK ASSIGNED FOR CONFORMANCE WITH THE APPLICABLE PROJECT DRAWINGS AND SPECIFICATIONS.
- MATERIAL REQUIRED TO BE TESTED WILL BE SELECTED BY THE TESTING LAB OR THE DISTRICT'S PROJECT INSPECTOR AND NOT BY THE CONTRACTOR.
- THE SPECIAL INSPECTOR SHALL FURNISH INSPECTION REPORTS TO THE DIVISIONOF THE STATE ARCHITECT, THE DISTRICT OR DISTRICT'S DESIGNATED REPRESENTATIVE, THE ARCHITECT OR PROJECT MANAGER, THE STRUCTURAL ENGINEER OF RECORD, THE CONTRACTOR AND OTHER PERSONS DESIGNATED BY THE DISTRICT OR DISTRICT'S REPRESENTATIVE. ALL DISCREPENCIES SHALL BE BROUGHT TO THE IMMEDIATE ATTENTIONOF THE CONTRACTOR FOR CORRECTION, THEN IF UNCORRECTED, TO THE PROPER DESIGN AUTHORITY AND TO THE BUILDING OFFICIAL. TEST REPORTS SHALL BE BROUGHT TO THE IMMEDIATE ATTENTION OF THE CONTRACTOR FOR CORRECTION, THEN IF UNCORRECTED, TO THE PROPER DESIGN AUTHORITY AND TO THE BUILDING OFFICIAL. TEST REPORTS SHALL BE SIGNED BY A REGISTERED CIVIL ENGINEER LICENSED IN THE STATE OF CALIFORNIA.
- THE SPECIAL INSPECTOR SHALL SUBMIT A FINAL SIGNED VERIFIED REPORT STATING WHETHER THE WORK REQUIRING SPECIAL INSPECTION WAS, TO THE BEST OF THE INSPECTOR'S KNOWLEDGE, IN CONFORMANCE WITH THE PROJECT PLANS AND SPECIFICATIONS AND THE APPLICABLE WORKMANSHIP PROVISIONS OF THE CBC.

PROJECT INSPECTOR (IOR)

- THE DISTRICT MUST PROVIDE FOR AND REQUIRE COMPETENT, ADEQUATE AND CONTINUOUS INSPECTION BY AN INSPECTOR SATISFACTORY TO THE ARCHITECT OR REGISTERED ENGINEER IN GENERAL RESPONSIBLE CHARGE OF OBSERVATION OF THE WORK OF CONSTRUCTION, TO ANY ARCHITECT OR REGISTERED ENGINEER DELEGATED RESPONSIBILITY FOR A PORTION OF THE WORK, AND TO DSA. THE COST OF PROJECT INSPECTION SHALL BE PAID FOR BY THE DISTRICT. AN INSPECTOR SHALL NOT HAVE ANY CURRENT EMPLOYMENT RELATIONSHIP WITH ANY ENTITY THAT IS A CONTRACTING PARTY FOR THE CONSTRUCTION. AN APPROVED PROJECT INSPECTOR MAY BE REMOVED AND REPLACED IF THE WORK PERFORMED IS NOT IN CONFORMANCE WITH ACCEPTED INSPECTION STANDARDS AS DETERMINED BY THE DISTRICT AND THE PROJECT ARCHITECT AND ENGINEER WITH CONCURRENCE OF DSA.

SYSTEM OR MATERIAL	CBC CODE REFERENCE	CODE OR STANDARD REFERENCE	FREQUENCY		REMARKS
			CONTINUOUS	PERIODIC	
FABRICATORS					
1. FABRICATORS	1704A.2.5 FABRICATOR APPROVAL NOT ALLOWED BY OSHPD		-	X	SPECIAL INSPECTIONS APPLY TO VERIFICATION OF DETAILED FABRICATION AND QUALITY CONTROL PROCEDURES INCLUDING REVIEW FOR COMPLETENESS AND ADEQUACY RELATIVE TO THE CODE REQUIREMENTS
CONCRETE					
1. REINFORCING STEEL PLACEMENT INCLUDING PRESTRESSING TENDONS	1705A3.9, 1908A.1, 1910A.2, 1910A.3 [DSA-SS/CC] 1909.2.4,1909.2.5, 1909.4.1	ACI 318: Ch. 20, 25.2,25.3,26.6.1-26.6.3, 26.13.1, 26.13.2, 26.13.3			SPECIAL INSPECTIONS APPLY TO BAR GRADE, SIZE, CONDITION, QUANTITY, SPACING, POSITION, SPLICES AND COVER
b) ALL OTHER REINFORCEMENT			-	X	
2. REINFORCING BAR WELDING:		AWS D1.4 ACI 318: 18.2.8, 25.5.7, 26.6.4, 26.13.1.4, 26.13.3.2, 26.13.3.3			
a) VERIFY WELDABILITY OF REINFORCING BARS OTHER THAN ASTM A706	1705A3.1 1903A.8		-	X	
b) INSPECT SINGLE-PASS FILLET WELDS, MAXIMUM 5/16"			-	X	
c) INSPECT ALL OTHER WELDS			X	-	
3. INSPECT ANCHORS CAST IN CONCRETE	-	ACI 318: 17.8.2, 17.8.2.4, 26.7.2, 26.13.1, 26.13.2, 26.13.1.3	-	X	ALL BOLTS VISUALLY INSPECTED, SPECIAL INSPECTIONS APPLY TO BOLT GRADE, SIZE, CONDITION, LOCATION AND EMBEDMENT.
4. INSPECT ANCHORS POST INSTALLED IN HARDENED CONCRETE MEMBERS:					
a) ADHESIVE ANCHORS INSTALLED IN HORIZONTALLY OR UPWARDLY INCLINED ORIENTATIONS TO RESIST SUSTAINED TENSION LOADS.	1705A.3.8, 1910A.5, [DSA-SS/CC] 1909.2.7	ACI 318: 17.8.2.4, 26.7.2, 26.13.1, 26.13.2	X	-	SPECIAL INSPECTOR SHALL VERIFY AND RECORD: ANCHOR TYPE, SIZE AND DIMENSIONS. HOLE DIMENSIONS AND CLEANLINESS. ANCHOR SPACING. EDGE DISTANCE. ANCHOR EMBEDMENT. TORQUE VALUE AS APPLICABLE). ADHESIVE TYPE AND EXPIRATION (AS APPLICABLE). ADHESIVE ANCHOR INSTALLER CERTIFICATIONS (AS APPLICABLE).
b) MECHINICAL ANCHORS AND ADHESIVE ANCHORS NOT DEFINED IN 4a.	1705A.3.8, 1910A.5, [DSA-SS/CC] 1909.2.7	ACI 318: 17.8.2, 26.7.2, 26.13.1, 26.13.3	-	X	
5. VERIFY USE OF REQUIRED MIX DESIGN.	1904.1, 1904.2 1903A.5, 1903A.6, 1903A.7, 1904A.1, 1904A.2, 1910A.1, [OSHPD 1&4] 1908A.1, [DSA-SS/CC] 1909.2.1, 1909.2.2, 1909.2.3	ACI 318: Ch. 19, 26.4.3, 26.4.4 ACI318: Ch. 19, 26.4, 26.13.3.2	X	-	EACH TRUCK DELIVERY TICKET
6. PRIOR TO AND DURING CONCRETE PLACEMENT FABRICATE SPECIMENS FOR STRENGTH TESTS, PERFORM SLUMP AND AIR CONTENT TESTS, AND DETERINE THE TEMPERATURE OF THE CONCRETE.	1705A.3.5, 1705A.3.6, 1705A.3.9, 1905A.1.17, [DSA-SS/CC] 1909.3.9	ASTM C31, ASTM C172 ACI 318: 26.4, 26.5, 26.12	X	-	
7. INSPECT CONCRETE (AND SHOTCRETE) PLACEMENT FOR PROPER APPLICATION TECHNIQUES	1705A.3.9, 1905A.1.15, 1905A.1.16, [DSA-SS/CC] 1909.3.7, 1909.3.8	ACI 318: 26.5, 26.13 ACI 506: 3.4	X	-	
8. VERIFY MAINTENANCE OF SPECIFIED CURING TEMPERATURE AND TECHNIQUES	-	ACI 318: 26.5.3-26.5.5, 26.13.3.3	X	-	SPECIAL INSPECTIONS APPLY TO VERIFYING SPECIFIED CURING IS PERFORMED, INCLUDING HOT AND COLD WEATHER PROVISIONS.
12. VERIFICATION OF FORM WORK	-	ACI 26.11.1.2(b), 26.13.3.3	-	X	SPECIAL INSPECTIONS APPLY TO SHAPE, LOCATION AND DIMENSIONS OF THE COCNRETE MEMBERS BEING FORMED
NON-SHRINK GROUT					
1. PLACEMENT OF NON-SHRINK GROUT			X	-	SPECIAL INSPECTIONS APPLY TO THICKNESS OF GROUT PAD. TAKE TEST SPECIMENS OF NON-SHRINK GROUT
STRUCTURAL STEEL					THE SPECIAL INSPECTIONS AND NONDESTRUCTIVE TESTING OF STRUCTURAL STEEL ELEMENTS IN BUILDINGS, STRUCTURES AND PORTIONS THEREOF SHALL BE IN ACCORDANCE WITH THE QUALITY ASSURANCE INSPECTION REQUIREMENTS OF: AISC 360, AISC 341, AISC 358, AND CBC CHAPTER 22A
1. FABRICATION OF STRUCTURAL ELEMENTS	1704A.2.5		-	X	REFER TO INSPECTION OF FABRICATOR REQUIREMENTS
2. MATERIAL VERIFICATION OF STRUCTURAL STEEL	1705A.2	AISC 360 A3.1	-	X	CERTIFIED MILL TEST REPORTS
5. MATERIAL IDENTIFICATION AND TESTING OF STRUCTURAL STEEL AND COLD-FORMED STEEL DECK					
a) FOR STRUCTURAL STEEL, IDENTIFICATION MARKINGS TO CONFORM TO AISC 360	2202A.1, [DSA-SS/CC] 2202.1	AISC A360 A3.1	-	X	
b) FOR OTHER STEEL, IDENTIFICATION MARKINGS TO CONFORM TO ASTM STANDARDS SPECIFIED IN THE APPROVED CONSTRUCTION DOCUMENTS	2202A.1, [DSA-SS/CC] 2202.1	APPLICABLE ASTM MATERIAL STD'S	-	X	
c) MANUFACTURER'S CERTIFIED TEST REPORTS		AISC 360 A3.1 & A3.2	-	X	
d) TESTING OF UNIDENTIFIED STEEL	2202A.1, [DSA-SS/CC] 2202.1	APPLICABLE ASTM MATERIAL STD'S	-	-	
WELDING					
1. PRIOR TO WELDING		AISC 360: T. N5.4-1			COMPLAINCE WITH WELDING PROCEDURE SPECIFICATIONS AND POR (IF APPLICABLE)
a) WELDER QUALIFICATION RECORDS AND CONTINUITY RECORDS			-	X	WPS SHALL BE AVAILABLE
b) MANUFACTURER CERTS FOR WELDING CONSUMABLES AVAILABLE			-	X	MATERIAL IDENTIFICATION (TYPE/GRADE)
c) WELDER IDENTIFICATION SYSTEM			X	-	THE FABRICATOR OR ERECTOR, AS APPLICABLE, SHALL MAINTAIN A SYSTEM BY WHICH A WELDER WHO HAS WELDED A JOINT OR MEMBER CAN BE IDENTIFIED. STAMPS, IF USED, SHALL BE THE LOW-STRESS TYPE.
d) FIT-UP OF GROOVE WELDS (INCLUDING JOINT GEOMETRY)			-	X	
e) FIT UP OG CJP GROOVE WELDS OF HSS T-, Y- AND K-JOINTS WITHOUT BACKING (INCLUDING JOINT GEOMETRY)			-	X	JOINT PREPARATIONS, DIMENSIONS, CLEANLINESS, TACKING AND BACKING TYPE (AS APPLICABLE), CONFIGURATION AND FINISH OF ACCESS HOLES
f) FIT-UP OF FILLET WELDS			-	X	
g) CHECK WELDING EQUIPMENT			-	X	
2. DURING WELDING		AISC 360: T. N5.4-2			
a) INSPECT ALL STRUCTURAL WELDING	1705A.2.5		X	-	NOTE: THERE SHOULD BE NO WELDING OVER TACK WELDS, ENVIRONMENTAL CONDITIONS SHOULD MEET STANDARDS, WPS AND ESTABLISHED WELDING TECHNIQUES SHALL BE FOLLOWED PER AISC AND AWS STANDARDS.
3. AFTER WELDING		AISC 360: T. N5.4-3			
a) WELDS CLEANED			X	-	
b) SIZE, LENGTH AND LOCATION OF WELDS			-	X	WELDS SHALL MEET VISUAL ACCEPTANCE CRITERIA, NO ARC STRIKES WILL BE PRESENT, BRACKING AND WELD TABS ARE REMOVED (IF REQUIRED)
h) REPAIR ACTIVITIES			-	X	
i) NO PROHIBITED WELDS HAVE BEEN ADDED WITHOUT THE APPROVAL OF THE EOR			-	X	DOCUMENTATION SHALL BE PROVIDED OF ACCEPTANCE OR REJECTION OF WELDED JOINTS OR MEMBERS
ARCHITECTURAL COMPONENTS					
1. INSPECT ERECTION AND FASTENING OF EXTERIOR CLADDING AND NON BEARING WALLS	1705A.13.5		-	X	APPLIES TO STRUCTURES IN SEISMIC DESIGN CATEGORY D, E OR F EXCEPTION(S): EXTERIOR CLADDING & NON BEARING WALLS LESS THAN 30FT TALL, EXTERIOR CLADDING AND INTERIOR AND EXTERIOR VENEER WEIGHING 5PSF OR LESS, INTERIOR NON BEARING WALLS WEIGHING 15 PSF OR LESS
PLUMBING, MECHANICAL AND ELECTRICAL COMPONENTS					
1. ANCHORAGE OF ELECTRICAL EQUIPMENT FOR EMERGENCY OR STANDBY POWER SYSTEMS	1705A.13.6		-	X	APPLIES TO STRUCTURES IN SEISMIC DESIGN CATEGORY C, D, E OR F
2. ANCHORAGE OF OTHER ELECTRICAL EQUIPMENT			-	X	
6. INSTALLATION OF MECHANICAL AND ELECTRICAL EQUIPMENT WHERE AUTOMATIC FIRE SPRINKLER SYSTEMS ARE INSTALLED			-	X	

REQUIRED STRUCTURAL TESTING (DSA)

SYSTEM OR MATERIAL	CBC CODE REFERENCE	CODE OR STANDARD REFERENCE	FREQUENCY/REMARKS
CONCRETE			
1. SAMPLING	1705A.3	ASTM C172	
2. SLUMP		ASTM C143	ONE TEST AT POINT OF TRUCK DISCHARGE FOR 50 CY OR FRACTION THEREOF FOR EACH TYPE OF CONCRETE. ADDITIONAL TESTS REQUIRED WHEN CONSISTENCY SEEMS TO HAVE CHANGED
3. AIR CONTENT		ASTM C173	VOLUMETRIC METHOD, ONE FOR EACH 50 CY PLACED FOR EACH TYPE OF AIR-ENTRAINED CONCRETE
4. TEMPERATURE		ASTM 1064	TEST HOURLY WHEN AIR TEMPERATURE IS 50°F AND BELOW AND WHEN 85°F AND ABOVE, AND EACH TIME A SET OF COMPRESSION TEST SPECIMENS ARE MADE
5. TAKE LABORATORY CURED COMPRESSION TEST SPECIMENS		ASTM C31	TAKE (1) SET OF 3 STANDARD CYLINDERS FOR EACH 50 CY OF CONCRETE OR 5000 SQ. FT. (2000 SQ. FT. DSA) OF SLABS & WALL OR FRACTION THEREOF FOR EACH TYPE OF CONCRETE TAKEN EACH DAY. MOLD AND STORE CYLINDERS FOR LABORATORY CURED TEST SPECIMENS EXCEPT WHEN FIELD CURED TEST SPECIMENS ARE REQUIRED
7. TEST COMPRESSIVE STRENGTH		ASTM C39	TEST (1) SPECIMEN AT 7 DAYS AND (2) SPECIMENS AT 28 DAYS
8. TEST DRYING SHRINKAGE		ASTM C157	TAKE (1) SET OF 3 DRYING SHINKAGE SAMPLES FOR EACH DAYS POUR OF SLABS ON GRADE, SUSPENDED SLABS, AND POST TENSIONED SLABS.
NON-SHRINK GROUT			
1. TAKE TEST SPECIMENS			
POST INSTALLED ANCHORS			
1. TEST ANCHORS FOR STRUCTURAL APPLICATION	1910A.5	ANCHOR ICC REPORT	TEST ANCHORS PER CBC 1910A.5 AND ANCHORS ICC REPORT WITH THE FOLLOWING FREQUENCY: 100% FOR STRUCTURAL APPLICATIONS
EXCEPTIONS:			
SILL PLATE BOLTING			10%
AT INTERFACE DOWELS AT CAST-IN-PLACE CONCRETE OR SHOTCRETE WALL OVERLAYS			25%
SLAB-ON-GRADE COLD JOINT DOWELS			AS APPROVED BY THE ENGINEER
2. TEST ANCHORS FOR NON STRUCTURAL APPLICATIONS SUCH AS EQUIPMENT ANCHORAGE (ANCHORS NOT SHOWN ON STRUCTURAL DRAWINGS)			50%
3. TESTING OF ANCHORS SHALL BE DONE IN THE PRESENCE OF THE PROJECT INSPECTOR AND A REPORT OF THE TEST RESULTS SHALL BE SUBMITTED TO DSA. IF ANY ANCHORS FAIL THE TESTING REQUIREMENTS, THE ADDITIONAL TESTING REQUIREMENTS SHALL BE ACCEPTABLE TO THE ENFORCEMENT AGENCY			
4. TESTING VALUES AS NOTED IN THE POST-INSTALLED ANCHOR TESTING LOADS ON SHEET			
HIGH STRENGTH BOLTING			
1. PERFORM TENSION CALIBRATION TESS WITH THE CONTRACTORS TOOLS ON 3 BOLT ASSEMBLIES	1705A.2.1	RCSC SPECIFICATIONS	FOR EACH DIAMETER, LENGTH, GRADE, PRODUCTION LOT AND TIGHTENING METHOD TO BE USED ON THE PROJECT.
2. TESTING OF HIGH-STRENGTH BOLTS, NUTS AND WASHERS	1705A2.6, [OSHPD 1 & 4] 2213A.1	RCSC 7.2 APPLICABLE ASTM MATERIAL STD'S	
WELDING: NON DESTRUCTIVE TESTING			EXCEPTION: THE RATE OF TESTING FOR ULTRASONIC WELDS MAY BE REDUCED TO 25% IF THE FAILURE RATE MEETS THE REQUIREMENTS OF AISC 341 APPENDIX Q.
1. ULTRASONIC TESTING	1705A.2.1		100% OF COMPLETE JOINT PENETRATION GROOVE WELDS ON MATERIALS 5/16" THICK AND GREATER
AUTOMATIC END-WELDED STUDS			
1. TEST STUDS PER THE LISTED STANDARDS AND THE STUDS ICC REPORT. PERFORM THE TORQUE TEST FOR TYPE A STUDS AND BEND TESTS FOR TYPE B STUDS	1705A.2.1	AWS D1.1, AISC 360	TEST AT THE BEGINNING OF EACH DAYS WORK, A MINIMUM OF (2) TEST STUD WELDS SHALL BE MADE WITH THE EQUIPMENT TO BE USED TO METAL WHICH IS THE SAME AS ACTUAL WORK PIECE AND AT ANY CHANGE IN THE WELDING SET UP OR PERSONNEL, RETEST (2) STUDS PRIOR TO PRODUCTION WORK

REQUIRED GEOTECHNICAL SPECIAL INSPECTION (DSA)

SYSTEM OR MATERIAL	CBC CODE REFERENCE	CODE OR STANDARD REFERENCE	FREQUENCY		REMARKS
			CONTINUOUS	PERIODIC	
SOILS					
1. INSPECT MATERIALS BELOW FOOTING FOR BEARING CAPACITY.	1705A.6	GEOTECHNICAL REPORT	-	X	BY THE GEOTECHNICAL ENGINEER
2. INSPECT EXCAVATIONS FOR PROPER DEPTH			-	X	
3. PERFORM CLASSIFICATION AND TESTING OF CONTROLLED FILL MATERIALS.			-	X	
4. VERIFY USE OF PROPER MATERIALS, DENSITIES, AND LIFT THICKNESS DURING PLACEMENT AND COMPACTION OF CONTROLLED FILL.			X	-	
5. PRIOR TO PLACEMENT OF CONTROLLED FILL, OBSERVE SUBGRADE AND VERIFY SITE HAS BEEN PREPARED PROPERLY.			-	X	
FOUNDATIONS					
1. PRIOR TO THE CONTRACTOR REQUESTING A IOR FOUNDATION INSPECTION, THE SOILS ENGINEERING SHALL ADVISE THE IOR IN WRITING.					SOILS ENGINEERING SHALL PROVIDE THE FOLLOWING IN WRITING: • THAT THE BUILDING PAD WAS PREPARED IN ACCORDANCE WITH THE SOILS REPORT • THAT THE UTILITY TRENCHES HAVE BEEN PROPERLY BACKFILLED AND COMPACTED. • THAT THE FOUNDATIONS COMPLY WITH THE SOILS REPORT AND APPROVED PLANS.

REQUIRED GEOTECHNICAL TESTING (DSA)

SYSTEM OR MATERIAL	CBC CODE REFERENCE	CODE OR STANDARD REFERENCE	FREQUENCY	REMARKS
SOILS				
1. PROCTOR TESTS OF THE STRUCTURAL FILL MATERIAL	1705A.6	ASTM 698	EACH MATERIAL TO BE COMPACTED	BY GEOTECHNICAL ENGINEER
2. STRUCTURAL FILL IN-PLACE DENSITY		ASTM D1556	EACH 500 SF OF EACH LIFT PLACED EACH DAY	

PARLIER HS STADIUM REPLACEMENT
603 3RD STREET
PARLIER, CA. 93648

DSA BACKCHECK 2

PBK
HOUSTON, TX
713-665-0008
TX FIRM I. BR 1608
www.pbk.com

PARLIER UNIFIED SCHOOL DISTRICT

CORNERSTONE structural engineering group
9 River Park Place East, Suite 330
Fresno, California 93720
559.320.3200
fax 559.320.3201

REGISTERED PROFESSIONAL ENGINEER
AUSTIN G. LEWIS
No. 56923
EXP. 3/31/27
STRUCTURAL
STATE OF CALIFORNIA

CLIENT
PARLIER UNIFIED SCHOOL DISTRICT

DATE	PROJECT NUMBER
6/19/26	250093

DRAWING HISTORY

No.	Description	Date
4	Addendum 4	6/12/26

CHECKED BY: DGL

DRAWN BY: DAA/MRC

TESTING AND SPECIAL INSPECTIONS

SX0.2

Plot Stamp:
6/19/2026 3:51:40 PM

TYPICAL DETAILS No. 1
SX1.1

FOR BLUEBEAM LABELING/OCR:

0"
1"

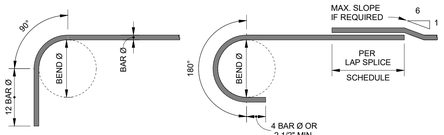

BAR SIZE	MIN. BEND Ø
#3 THRU #8	6 BAR Ø
#9 THRU #11	8 BAR Ø

MAIN REINFORCEMENT

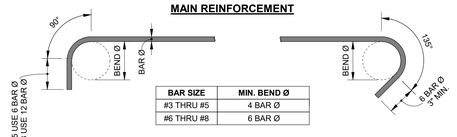

BAR SIZE	MIN. BEND Ø
#3 THRU #5	4 BAR Ø
#6 THRU #8	6 BAR Ø

STIRRUPS & TIES

REINFORCING BAR HOOKS

1 1/2" = 1'-0"

1 SX1.1

MINIMUM LAP SPLICE SCHEDULE							
BAR SIZE	POSITION	LAP SPLICE LENGTH IN INCHES					
		F'c ≤ 3500 PSI		F'c = 4000 PSI		F'c = 5000 PSI	
		CLASS A	CLASS B	CLASS A	CLASS B	CLASS A	CLASS B
#3	TOP	24	28	24	25	24	24
	BOTTOM	24	24	24	24	24	24
#4	TOP	29	38	25	33	24	29
	BOTTOM	24	29	24	25	24	24
#5	TOP	36	47	31	41	28	36
	BOTTOM	28	36	24	31	24	28
#6	TOP	43	56	37	49	34	44
	BOTTOM	33	43	29	37	26	34
#7	TOP	63	81	54	71	49	63
	BOTTOM	48	63	42	54	38	49
#8	TOP	72	93	62	81	56	72
	BOTTOM	55	72	48	62	43	56
#9	TOP	81	105	70	91	63	81
	BOTTOM	62	81	54	70	48	63
#10	TOP	91	118	79	102	71	92
	BOTTOM	70	91	61	79	54	71
#11	TOP	101	131	87	114	78	102
	BOTTOM	78	101	67	87	60	78

NOTES:
1. LAP SPLICE LOCATIONS SHALL BE APPROVED BY THE ENGINEER.
2. LAP SPLICES SHALL BE CONTACT (CLASS B) FOR CAST-IN-PLACE CONCRETE UNLESS NOTED OTHERWISE.
3. TOP BARS ARE HORIZONTAL BARS WITH 12 INCHES OR MORE OF FRESH CONCRETE BELOW THE BAR.
4. WHEN TWO BARS OF DIFFERENT SIZE ARE SPLICED, USE THE LARGER LAP LENGTH.
5. STAGGER LAP SPLICES WHERE POSSIBLE. WHERE CLASS A SPLICES ARE CALLED OUT ON THE DRAWINGS, STAGGER LAP SPLICES 24 INCHES FOR ADJACENT BARS.
6. LAP SPLICES NOTED ARE FOR NORMAL WEIGHT CONCRETE. LAP SPLICE LENGTHS SHALL BE MULTIPLIED BY 1.3 FOR LIGHTWEIGHT CONCRETE.
7. NO SPLICES ARE ALLOWED FOR #14 AND #18 REINFORCEMENT.
8. BAR DEVELOPMENT LENGTHS EQUAL CLASS A LAP SPLICE LENGTHS.
9. ENTIRE BUNDLED BARS SHALL NOT BE LAP SPLICED. LAP SPLICES OF INDIVIDUAL BARS WITHIN THE BUNDLE SHALL NOT OVERLAP.
10. AT CONTRACTOR'S OPTION, MECHANICAL COUPLERS MAY BE SUBSTITUTED FOR LAP SPLICES. MECHANICAL COUPLERS SHALL HAVE AN ICC REPORT AND SHALL DEVELOP 125% OF THE YIELD STRENGTH OF THE BAR.

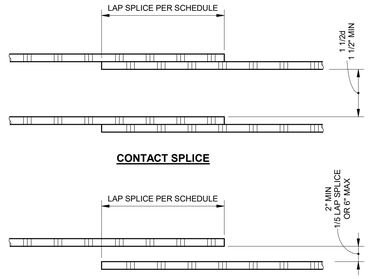

LAP SPLICE SCHEDULE FOR CONCRETE

NO SCALE

2 SX1.1

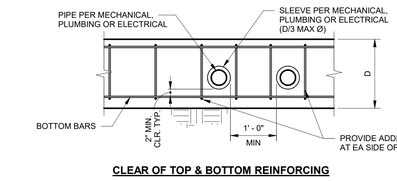

CLEAR OF TOP & BOTTOM REINFORCING

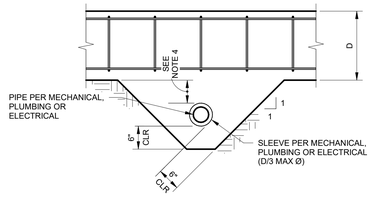

BELOW BOTTOM REINFORCING

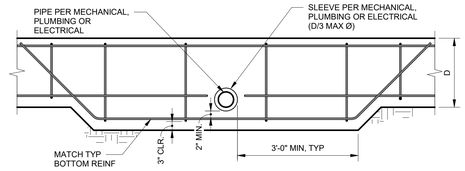

AT BOTTOM REINFORCING

NOTES:
1. SLEEVE ID 2" LARGER THAN PIPE OD OR BELL OD.
2. SEAL VOID BETWEEN PIPE AND SLEEVE WITH ELASTIC WATERPROOF MATERIAL, TYP.
3. DETAIL APPLICABLE TO MAXIMUM 8"Ø SLEEVE.
4. NO FTG EXTENSION REQ'D FOR PIPE DEEPER THAN 12" BELOW FTG (SLEEVE STILL REQ'D).
5. WHERE PENETRATION CONFLICTS WITH REBAR TIE, OMIT TIE & PROVIDE 1 ADDITIONAL TIE EACH SIDE OF SLEEVE.

FOOTING PENETRATIONS

NO SCALE

6 SX1.1

MINIMUM CONCRETE COVER SCHEDULE	
ELEMENT	CLEAR COVER
CONCRETE CAST AGAINST AND PERMANENTLY EXPOSED TO EARTH	3"
CONCRETE EXPOSED TO EARTH OR WEATHER: #5 AND SMALLER #6 AND LARGER	 1 1/2" 2"
CONCRETE NOT EXPOSED TO WEATHER OR IN CONTACT WITH GROUND: SLABS, WALLS & JOISTS: #11 AND SMALLER #14 AND #18 BEAMS & COLUMNS PRIMARY REINFORCEMENT, TIES, STIRRUPS, & SPIRALS SHELLS & FOLDED PLATE MEMBERS #5 AND SMALLER #6 AND LARGER	 3/4" 1 1/2" 1 1/2" 1/2" 3/4"

NOTES:
1. COVERS NOTED SHALL BE USED UNLESS NOTED OTHERWISE ON THE CONTRACT DOCUMENTS.
2. COVERS NOTED ARE FOR CAST-IN-PLACE, NON-PRESTRESSED MEMBERS.
3. MINIMUM CLEAR COVER FOR BUNDLED BARS SHALL BE THE LESSER OF THE EQUIVALENT DIAMETER OF THE BUNDLE AND 2".

MINIMUM CONCRETE COVER SCHEDULE

NO SCALE

3 SX1.1

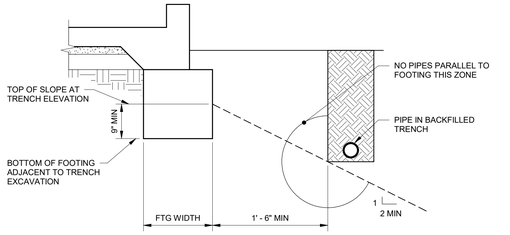

EXCAVATION PARALLEL TO FTG

NO SCALE

4 SX1.1

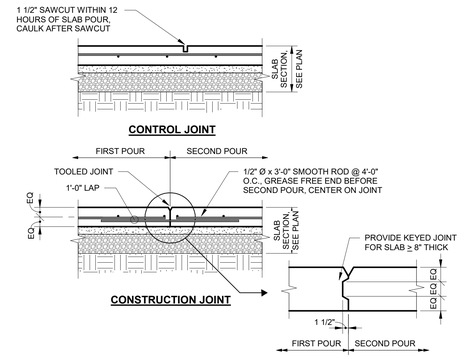

SLAB JOINT

NO SCALE

5 SX1.1

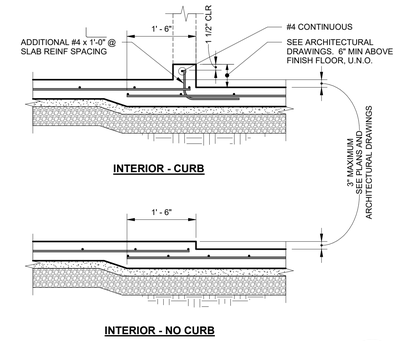

SLAB DEPRESSION

NO SCALE

7 SX1.1

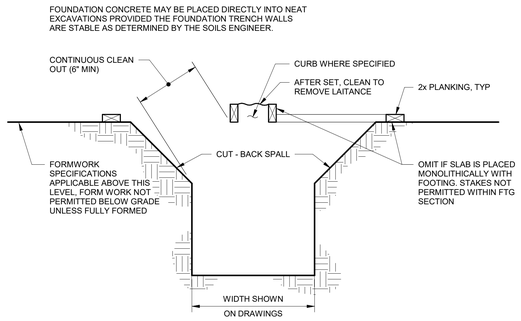

MANDATORY MIN FORMWORK (UNLESS FULLY FORMED)

FORMING DETAIL

NO SCALE

8 SX1.1

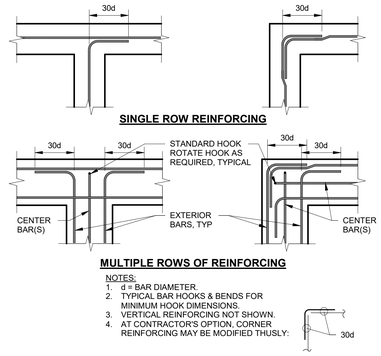

NOTES:
1. d = BAR DIAMETER.
2. TYPICAL BAR HOOKS & BENDS FOR MINIMUM HOOK DIMENSIONS.
3. VERTICAL REINFORCING NOT SHOWN.
4. AT CONTRACTOR'S OPTION, CORNER REINFORCING MAY BE MODIFIED THUSLY:

FOOTING, WALL & CURB INTERSECTIONS

NO SCALE

9 SX1.1

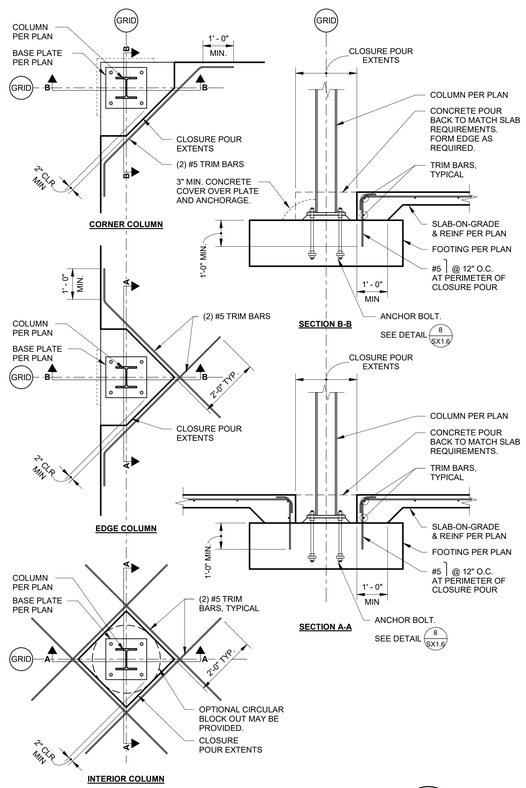

CLOSURE POUR DETAIL

NO SCALE

13 SX1.1

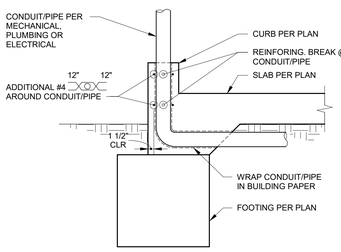

CURB PENETRATION

NO SCALE

10 SX1.1

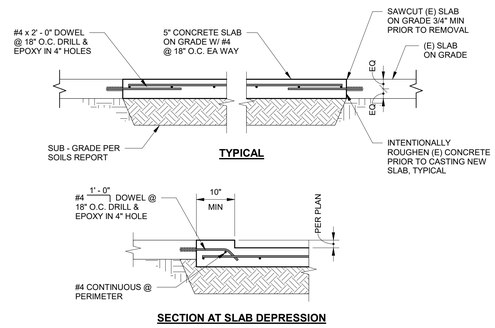

SLAB INFILL

NO SCALE

11 SX1.1

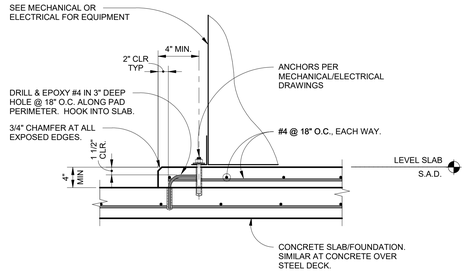

HOUSEKEEPING PAD

NO SCALE

12 SX1.1

PBK
www.pbk.com
TX FIRM REGISTRATION # 1608
HOUSTON, TX
713-665-0008

PARLIER HS STADIUM REPLACEMENT

603 3RD STREET
PARLIER, CA. 93648

DSA BACKCHECK 2

PARLIER UNIFIED SCHOOL DISTRICT

CORNERSTONE structural engineering group
9 River Park Place East, Suite 330
Fresno, California 93720
559.320.3200
fax 559.320.3201

REGISTERED PROFESSIONAL ENGINEER
JUSTIN G. [illegible]
No. 56623
EXP. 3/31/27
STRUCTURAL
STATE OF CALIFORNIA

CLIENT	
PARLIER UNIFIED SCHOOL DISTRICT	
DATE	PROJECT NUMBER
6/19/26	250093

DRAWING HISTORY

No.	Description	Date

CHECKED BY: DGL

DRAWN BY: DAA/MRC

TYPICAL DETAILS No. 1

SX1.1

Plot Stamp:
6/19/2026 3:51:41 PM

TYPICAL DETAILS No. 2
SX1.2

FOR BLUEBEAM LABELING/OCR:

0"
1"

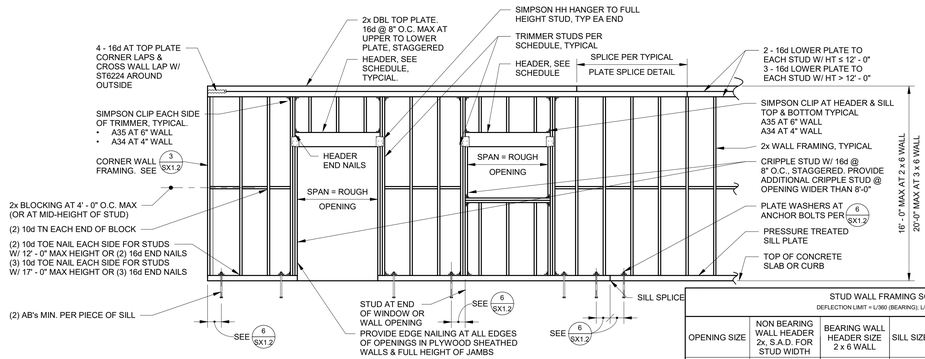

STUDWALL FRAMING

NO SCALE

1 SX1.2

STUD WALL FRAMING SCHEDULE[1]
DEFLECTION LIMIT = L/360 (BEARING); L/240 (NON-BEARING)

OPENING SIZE	NON BEARING WALL HEADER 2x, S.A.D. FOR STUD WIDTH	BEARING WALL HEADER SIZE 2 x 6 WALL	SILL SIZE	TRIMMER	HEADER END NAILS
4' - 0" MAX	STUD WIDTH x 6	6 x 6	(2) 2x	(2) 2x	4 - 16d EA END
6' - 0" MAX	STUD WIDTH x 8	6 x 8	(2) 2x		4 - 16d EA END
8' - 0" MAX	STUD WIDTH x 10	6 x 10	(2) 2x	(3) 2x	4 - 16d EA END
10' - 6" MAX	STUD WIDTH x 12	6 x 12	(3) 2x	$6x^3$ 4x W/ $2x^4$	4 - 16d EA END

1. SCHEDULE BASED ON 30 PSF WIND LOAD (BEARING); 5 PSF WIND LOAD (INTERIOR NON-BEARING)

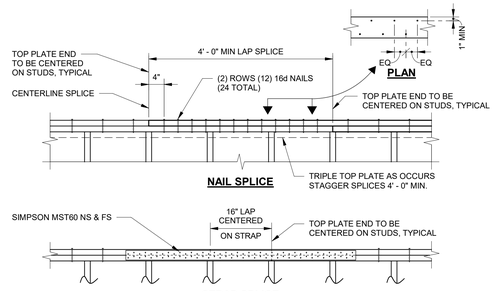

NOTE:
1. USE NAIL SPLICE UNLESS NOTED OTHERWISE ON PLANS.
2. AT PLYWOOD WALLS, STRAP MAY BE INSTALLED OVER PLYWOOD AND TAKE PLACE OF EDGE NAILING.

PLATE SPLICE DETAIL

NO SCALE

2 SX1.2

MINIMUM NAILING SCHEDULE

CONNECTION	NAILING[1]
1. JOIST TO SILL GIRDER, TOENAIL 8 - INCH JOIST OR LESS FOR EACH ADDITIONAL 4 INCHES IN DEPTH OF JOIST	 3 - 16d 1 - 16d
2. BRIDGING TO JOIST, TOENAIL EACH END a. BLOCKING BETWEEN JOISTS OR RAFTERS - TO JOIST OR RAFTERS - TOENAILS EACH SIDE, EACH END b. BLOCKING BETWEEN STUDS, EACH END	2 - 8d 2 - 10d[12] 2 - 10d TOENAILS OR 2 - 16d
3. 1" x 6" (25mm x 152mm) SUBFLOOR OR LESS TO EACH JOIST, FACE NAIL.	2 - 8d
4. WIDER THAN 1" x 6" (25mm x 152mm) SUBFLOOR TO EACH JOIST, FACE NAIL.	3 - 8d
5. 2" (51mm) SUBFLOOR TO JOIST OR GIRDER, BLIND AND FACE NAIL	2 - 16d
6. SOLE PLATE TO JOIST OR BLOCKING, TYPICAL FACE NAIL. SOLE PLATE TO JOIST BLOCKING, AT BRACED WALL PANELS.	16d AT 16" (406mm) O.C. 3 - 16d PER 16" (406mm)
7. TOP PLATE TO STUD, END NAIL.	2 - 16d
8. STUD TO SOLE PLATE.	4 - 8d, TOENAIL OR 2 - 16d, END NAIL
9. DOUBLE STUDS, FACE NAIL.	16d AT 24" (610mm) O.C.
10. DOUBLED TOP PLATES, TYPICAL FACE NAIL. DOUBLED TOP PLATES, LAP SPLICE.	16d AT 16" (406mm) O.C. 8 - 16d
11. BLOCKING BETWEEN JOISTS OR RAFTERS TO TOP PLATE, TOENAIL	3 - 8d
12. RIM JOIST TO TOP PLATE, TOENAIL	8d AT 6" (152mm) O.C.
13. TOP PLATES, LAPS AND INTERSECTIONS, FACE NAIL.	2 - 16d
14. CONTINUOUS HEADER, TWO PIECES.	16d AT 16" (406mm) O.C. ALONG EACH EDGE
15. CEILING JOISTS TO PLATE, TOENAIL.	3 - 8d
16. CONTINUOUS HEADER TO STUD, TOENAIL.	4 - 8d
17. CEILING JOISTS, LAPS OVER PARTITIONS, FACE NAIL.	3 - 16d
18. CEILING JOISTS TO PARALLEL RAFTERS, FACE NAIL.	3 - 16d
19. JOIST OR RAFTERS AT ALL BEARINGS - TOENAILS, EACH SIDE.	3 - 8d
20. 1" (25mm) BRACE TO EACH STUD AND PLATE, FACE NAIL.	2 - 8d
21. 1" x 8" (25mm x 203mm) SHEATHING OR LESS TO EACH BEARING, FACE NAIL.	3 - 8d
22. WIDER THAN 1" x 8" (25mm x 203mm) SHEATHING TO EACH BEARING, FACE NAIL.	3 - 8d
23. BUILT - UP CORNER STUDS.	16d AT 24" (610mm) O.C.
24. BUILT - UP GIRDER AND BEAMS.	20D AT 32" (813mm) O.C. AT TOP AND BOTTOM AND STAGGERED 2 - 20d AT ENDS AND AT EACH SPLICE
25. 2" (51mm) PLANKS	2 - 16d AT EACH BEARING
26. COLLAR TIE TO RAFTER, FACE NAIL.	3 - 10d
27. JACK RAFTER TO HIP.	3 - 10d, TOENAIL OR 2 - 16d, FACE NAIL
28. ROOF RAFTER TO 2x RIDGE BEAM	2 - 10d, TOENAIL OR 2 - 16d, FACE NAIL
29. JOIST TO BAND JOIST, FACE NAIL	3 - 16d
30. LEDGER STRIP, FACE NAIL.	3 - 16d
31. WOOD STUCTURAL PANELS AND PARTICLEBOARD:[2] SUBFLOOR AND WALL SHEATHING (TO FRAMING): 1/2" (12.7 mm) AND LESS 19/32" - 3/4" (15mm - 19mm) 7/8" - 1" (22mm - 25mm) COMBINATION SUBFLOOR - UNDERLAYMENT (TO FRAMING): 3/4" (19mm) AND LESS 7/8" - 1" (22mm - 25mm) 1 1/8" - 1 1/4" (29mm - 32mm)	 6d[3] 8d OR 6d[4] 8d[3] 10d OR 8d[4] 6d[3] 8d[3] 10d OR 8d[4]
32. PANEL SIDING (TO FRAMING)[5]: 1/2" (12.7mm) AND LESS 5/8" (16mm)	 6d[6] 8d[6]
33. FIBERBOARD SHEATHING: 1/2" (12.7mm) 25/32" (20mm)	 No. 11 ga.[6] 6d[4] No. 16 ga.[7] No. 11 ga.[6] 8d[4] No. 16 ga.[7]
34. INTERIOR PANELING: 1/4" (6.4mm) 3/8" (9.5mm)	 4d[10] 6d[11]

1 COMMON NAILS SHALL BE USED EXCEPT WHERE OTHERWISE STATED.
2 NAILS SPACED AT 6 INCHES (152mm) ON CENTER AT EDGES, 12 INCHES (305mm) AT INTERMEDIATE SUPPORTS EXCEPT 6 INCHES (152mm) AT ALL SUPPORTS WHERE SPANS ARE 48 INCHES (1219mm) OR MORE. FOR NAILING OF WOOD STRUCTURAL PANEL AND PARTICLEBOARD DIAPHRAGMS AND SHEAR WALLS, REFER TO SECTION 2305. NAILS FOR WALL SHEATHING MAY BE COMMON.
3 COMMON OR DEFORMED SHANK.
4 COMMON.
5 DEFORMED SHANK.
6 CORROSION-RESISTANT SIDING OR CASING NAILS CONFORMING TO THE REQUIREMENTS OF SECTION 2304.10.2.1
7 FASTENERS SPACED 3 INCHES (76mm) ON CENTER AT EXTERIOR EDGES AND 6 INCHES (152mm) ON CENTER AT INTERMEDIATE SUPPORTS.
8 CORROSION-RESISTANT ROOFING NAILS WITH 7/16-INCH-DIAMETER (11mm) HEAD AND 11/2-INCH (38mm) LENGTH FOR 1/2-INCH (12.7mm) SHEATHING AND 13/4-INCH (44mm) LENGTH FOR 25/32-INCH (20mm) SHEATHING CONFORMING TO THE REQUIREMENTS OF SECTION 2304.10.2.1.
9 CORROSION-RESISTANT STAPLES WITH NOMINAL 7/16-INCH (11mm) CROWN AND 11/8-INCH (29mm) LENGTH FOR 1/2-INCH (12.7mm) SHEATHING AND 11/2-INCH (38mm) LENGTH FOR 25/32-INCH (20mm) SHEATHING CONFORMING TO THE REQUIREMENTS OF SECTION 2304.10.2.1.
10 PANEL SUPPORTS AT 16 INCHES (406mm) [20 INCHES (508mm) IF STRENGTH AXIS IN THE LONG DIRECTION OF THE PANEL, UNLESS OTHERWISE MARKED]. CASING OF FINISH NAILS SPACED 6 INCHES (152mm) ON PANEL EDGES. 12 INCHES (305mm) AT INTERMEDIATE SUPPORTS.
11 PANEL SUPPORTS AT 24 INCHES (610mm). CASING OR FINISH NAILS SPACED 6 INCHES (152mm) ON PANEL EDGES, 12 INCHES (305mm) AT INTERMEDIATE SUPPORTS.
12 WHEN POSSIBLE, NAILS DRIVEN PERPENDICULAR TO GRAIN SHALL BE USED INSTEAD OF TOENAILS.

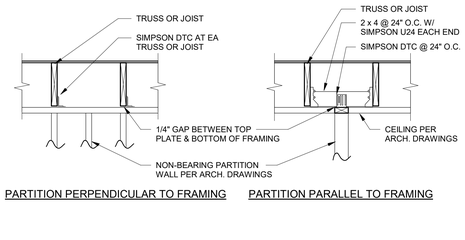

PARTITION PERPENDICULAR TO FRAMING PARTITION PARALLEL TO FRAMING

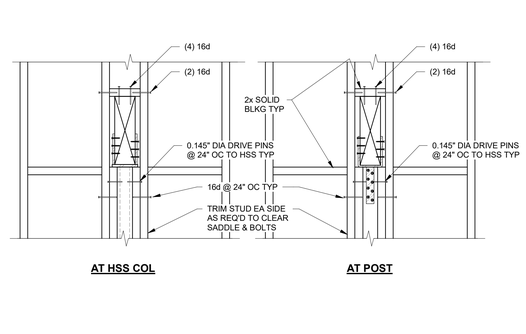

FRAMING DETAIL

NO SCALE

3 SX1.2

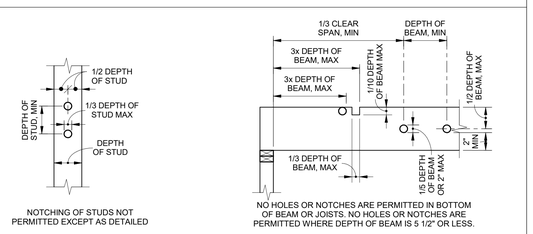

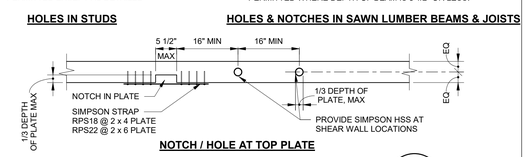

NOTCH/HOLE IN FRAMING

NO SCALE

4 SX1.2

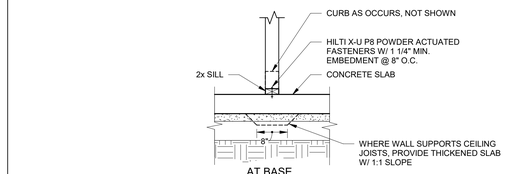

NON-BEARING WALL PARTITION

NO SCALE

5 SX1.2

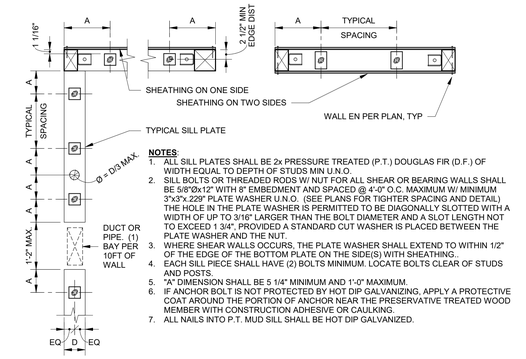

NOTES:
1. ALL SILL PLATES SHALL BE 2x PRESSURE TREATED (P.T.) DOUGLAS FIR (D.F.) OF WIDTH EQUAL TO DEPTH OF STUDS MIN U.N.O.
2. SILL BOLTS OR THREADED RODS W/ NUT FOR ALL SHEAR OR BEARING WALLS SHALL BE 5/8"Ø0x12" WITH 8" EMBEDMENT AND SPACED @ 4'-0" O.C. MAXIMUM W/ MINIMUM 3"x3"x.229" PLATE WASHER U.N.O. (SEE PLANS FOR TIGHTER SPACING AND DETAIL) THE HOLE IN THE PLATE WASHER IS PERMITTED TO BE DIAGONALLY SLOTTED WITH A WIDTH OF UP TO 3/16" LARGER THAN THE BOLT DIAMETER AND A SLOT LENGTH NOT TO EXCEED 1 3/4", PROVIDED A STANDARD CUT WASHER IS PLACED BETWEEN THE PLATE WASHER AND THE NUT.
3. WHERE SHEAR WALLS OCCURS, THE PLATE WASHER SHALL EXTEND TO WITHIN 1/2" OF THE EDGE OF THE BOTTOM PLATE ON THE SIDE(S) WITH SHEATHING.
4. EACH SILL PIECE SHALL HAVE (2) BOLTS MINIMUM. LOCATE BOLTS CLEAR OF STUDS AND POSTS.
5. "A" DIMENSION SHALL BE 5 1/4" MINIMUM AND 1'-0" MAXIMUM.
6. IF ANCHOR BOLT IS NOT PROTECTED BY HOT DIP GALVANIZING, APPLY A PROTECTIVE COAT AROUND THE PORTION OF ANCHOR NEAR THE PRESERVATIVE TREATED WOOD MEMBER WITH CONSTRUCTION ADHESIVE OR CAULKING.
7. ALL NAILS INTO P.T. MUD SILL SHALL BE HOT DIP GALVANIZED.

SILL PLATE AND ANCHOR BOLT

NO SCALE

6 SX1.2

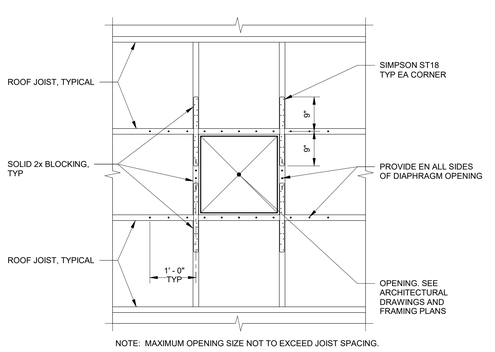

NOTE: MAXIMUM OPENING SIZE NOT TO EXCEED JOIST SPACING.

SMALL ROOF OPENING

NO SCALE

7 SX1.2

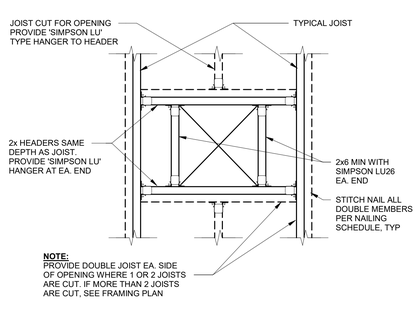

WOOD - TYP FRMG AT CLG OPENINGS

NO SCALE

8 SX1.2

TYP GLB/LVL BEAM INTO STUD WALL

1" = 1'-0"

9 SX1.2

SIMPSON CCQ/ECCQ SCHEDULE

BEAM	POST	COLUMN CAP	ALLOWABLE DOWN	
			CCQ	ECCQ
4x	4x6	SIMPSON CCQ46SDS2.5	24,065#	12,030#
6x	6x6	SIMPSON CCQ66SDS2.5	30,250#	18,905#
GLB 3 1/8	4x6	SIMPSON CCQ3-6SDS2.5	21,485#	10,740#
GLB 5 1/8	6x6	SIMPSON CCQ5-6SDS2.5	28,190#	17,615#
6x	HSS	SIMPSON CCQQ6-SDS2.5	30,250#	18,905#
GLB 5 1/8	HSS	SIMPSON CCQQ5-SDS2.5	28,190#	17,615#

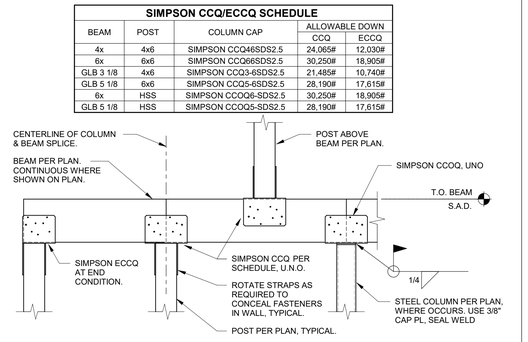

BEAM TO POST CONNECTION

NO SCALE

10 SX1.2

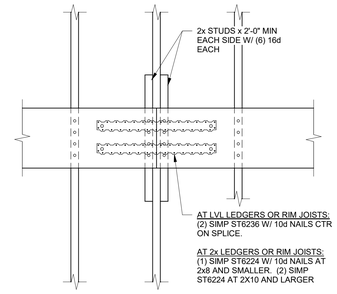

LEDGER & RIM JOIST SPLICE UON

1" = 1'-0"

11 SX1.2

Plot Stamp:
6/19/2026 3:51:42 PM

PBK

www.pbk.com

TX FIRM: BR 1608

HOUSTON, TX
713-665-0008

PARLIER HS STADIUM REPLACEMENT

603 3RD STREET
PARLIER, CA. 93648

DSA BACKCHECK 2

PARLIER UNIFIED SCHOOL DISTRICT

CORNERSTONE structural engineering group
9 River Park Place East, Suite 330
Fresno, California 93720
559.320.3200
fax 559.320.3201

REGISTERED PROFESSIONAL ENGINEER — JUSTIN G. [illegible] — No. 56623 EXP. 3/31/27 — STRUCTURAL — STATE OF CALIFORNIA

CLIENT
PARLIER UNIFIED SCHOOL DISTRICT

DATE 6/19/26 | PROJECT NUMBER 250093

DRAWING HISTORY

No.	Description	Date

CHECKED BY: DGL

DRAWN BY: DAA/MRC

TYPICAL DETAILS No. 2

SX1.2

TYPICAL DETAILS No. 3
SX1.3

FOR BLUEBEAM LABELING/DOOR:

0"
1"

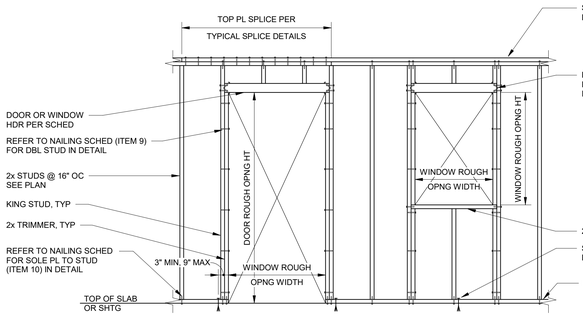

HEADER SCHEDULE		
OPENING WIDTH	2x4 WALL HEADER	2x6 WALL HEADER
<4'-0"	4x4	4x6 FLAT
4'-0" - 6'-0"	4x4	4x6 FLAT
6'-0" - 8'-0"	4x6	4x6 FLAT
8'-0" - 10'-0"	4x6	6x6
10'-0" - 12'-0"	4x8	6x8

NOTE:
1. HEADERS, KING STUDS AND OTHER REFERENCES ON PLAN GOVERNOVER THESE TYPICAL SCHEDULES/DETAILS.
2. NAIL SILL PLATE TO WOOD FRAMED FLOORS WITH 16d @ 12" O.C.

INTERIOR NON-BEARING PARTITION WALL FRAMING
NO SCALE — 1 / SX1.3

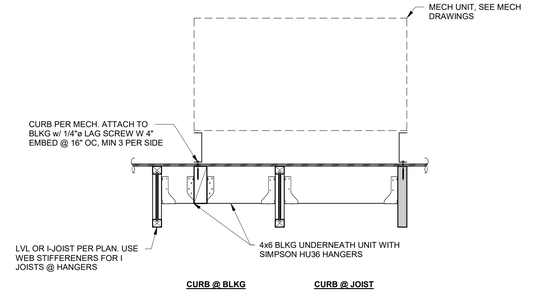

TYPICAL MECHANICAL CURB DETAIL
1" = 1'-0" — 2 / SX1.3

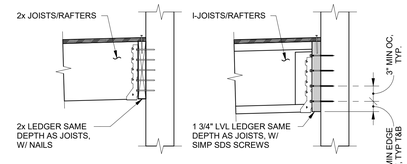

JOISTS	LEDGER	NAILS/SCREWS EA STUD UON
2x6	2x6	(2) - 16d
2x8	2x8	(3) - 16d
2x10	2x10	(4) - 16d
2x12[2]	2x12	(5) - 16d
14" I-JOIST	1 3/4"x14" LVL	(4) 1/4"DIA x 4 1/2" SIMP SDS SCREWS
16" I-JOIST	1 3/4"x16" LVL	(5) 1/4"DIA x 4 1/2" SIMP SDS SCREWS
18" I-JOIST	1 3/4"x18" LVL	(6) 1/4"DIA x 4 1/2" SIMP SDS SCREWS

NOTES:
1. IF SPLITTING OCCURS, REPLACE MEMBER AND PRE-DRILL HOLES.
2. OR 1.75"x11.25" LVL

LEDGER DETAIL
NO SCALE — 3 / SX1.3

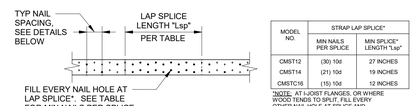

MODEL NO.	STRAP LAP SPLICE*	
	MIN NAILS PER SPLICE	MIN SPLICE* LENGTH "Lsp"
CMST12	(30) 10d	27 INCHES
CMST14	(21) 10d	19 INCHES
CMSTC16	(15) 10d	12 INCHES

*NOTE: AT I-JOIST FLANGES, OR WHERE WOOD TENDS TO SPLIT, FILL EVERY OTHER NAIL HOLE AT SPLICE AND INCREASE LAP LENGTH ACCORDINGLY.

LAP SPLICE AT "CMST" OR "CMSTC" STRAP

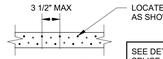

AT "CMST" STRAP

SEE DETAIL ABOVE WHERE SPLICE REQ'D FOR CMST OR CMSTC STRAP

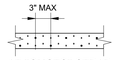

AT "CMSTC" STRAP

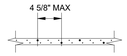

AT "CS" STRAP

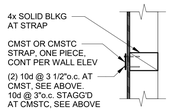

AT "CMST" OR "CMSTC" STRAP

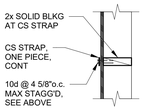

AT "CS" STRAP

AT "CMST" OR "CMSTC" STRAP ON OPP SIDE OF WALL PLYWD

AT "CS" STRAP ON OPP SIDE OF WALL PLYWD

STRAP DETAIL
NO SCALE — 5 / SX1.3

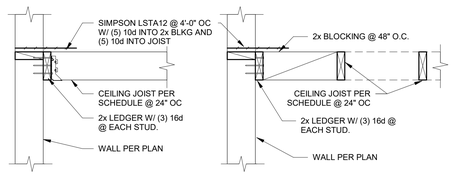

PERPENDICULAR TO STUD — **PARALLEL TO STUD**

CEILING JOIST SCHEDULE				
JOIST	MAX SPAN		LEDGER NAILS	BLOCKING
	INT. COND. GYP BOARD	EXT. COND. PLASTER		
2x6 @ 24" oc	10'-0"	9'-0"	(2) 16d	@ MIDSPAN
2x8 @ 24" oc	14'-0"	12'-0"	(3) 16d	@ 1/3 PTS
2x10 @ 24" oc	16'-0"	15'-0"	(3) 16d	@ 1/3 PTS

NOTES:
1. SEE ARCHITECTURAL DRAWINGS FOR CEILING LOCATIONS AND FRAMING DETAILS NOT NOTED.
2. RUN WALL PLYWOOD CONTINUOUS PAST LEDGER AS OCCURS.
3. USE SIMPSON LUS HANGERS OR EQUIVALENT
4. SEE PLAN FOR CEILING JOIST SIZE @ STORAGE AREAS.
5. DESIGN LOADS: DL = 8PSF AT GYP BD, 13 PSF AT PLASTER, LL = 10 PSF, W = VARIES AT FIRE RATED CONSTRUCTION, SPACE CEILING JOISTS @ 16" OC WHERE REQUIRED PER ARCH DRAWINGS.
6. SEE 8/SX1.2 FOR FRAMING OPENINGS OR RECESSED FRAMES
7. WHERE SPANS EXCEED SCHEDULE, SEE DETAIL 4/SX1.3

WOOD CEILING JOIST FRAMING DETAIL
NO SCALE — 7 / SX1.3

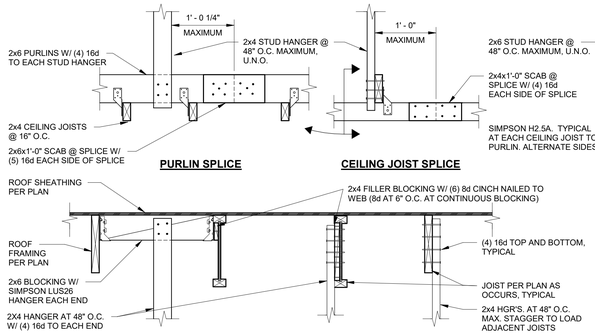

CEILING SUPPORT FRAMING
NO SCALE — 4 / SX1.3

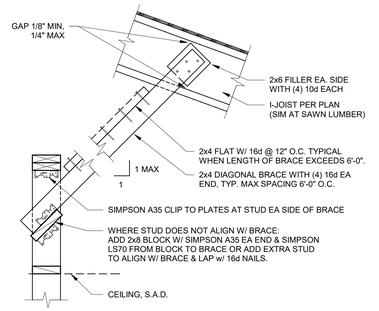

CONDITION A: WALL PERPENDICULAR TO I-JOISTS

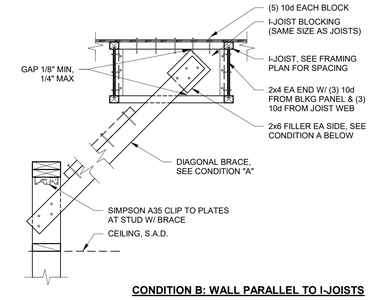

CONDITION B: WALL PARALLEL TO I-JOISTS

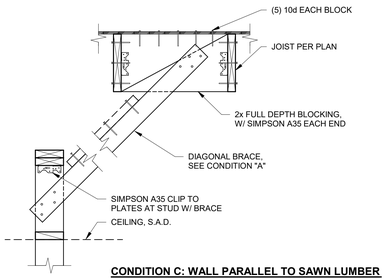

CONDITION C: WALL PARALLEL TO SAWN LUMBER

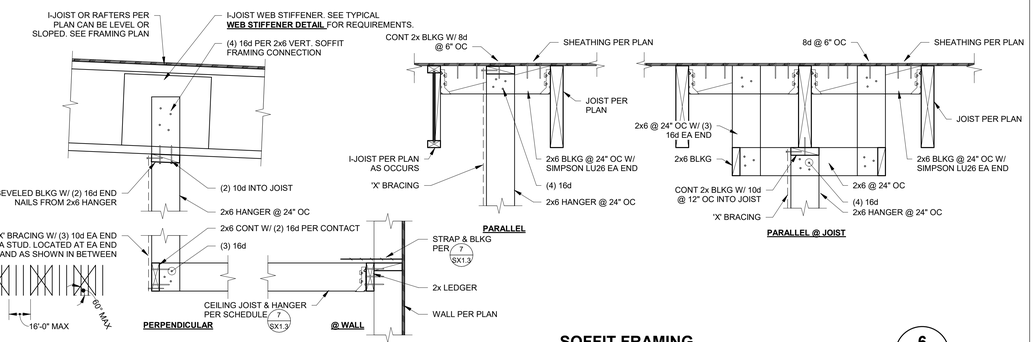

SOFFIT FRAMING
NO SCALE — 6 / SX1.3

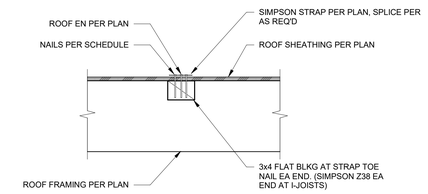

MODEL No.	NAILING
CS	10d @ 4 1/8" oc STAGG'D
CMST	10d @ 3 1/2" oc STAGG'D
CMSTC	10d @ 3" OC STAGG'D

TYPICAL ROOF STRAP
1 1/2" = 1'-0" — 8 / SX1.3

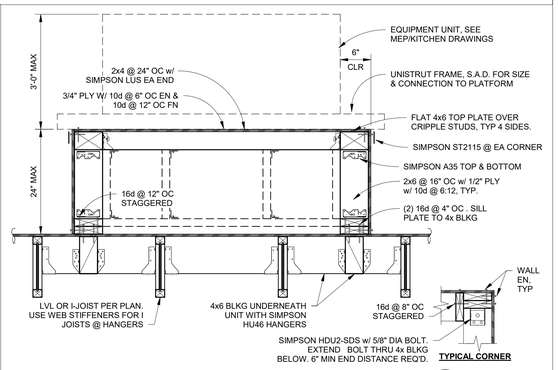

TYPICAL EQUIPMENT PLATFORM
1" = 1'-0" — 9 / SX1.3

NON-BEARING PARTIAL HEIGHT WALL PARTITION
1" = 1'-0" — 10 / SX1.3

PARLIER HS STADIUM REPLACEMENT
603 3RD STREET
PARLIER, CA. 93648

DSA BACKCHECK 2

PARLIER UNIFIED SCHOOL DISTRICT

CORNERSTONE structural engineering group
9 River Park Place East, Suite 330
Fresno, California 93720
559.320.3200
fax 559.320.3201

REGISTERED PROFESSIONAL ENGINEER — JUSTIN G. LEE — No. 56623 EXP. 3/31/27 — STRUCTURAL — STATE OF CALIFORNIA

CLIENT	
PARLIER UNIFIED SCHOOL DISTRICT	
DATE	PROJECT NUMBER
6/19/26	250093

DRAWING HISTORY

No.	Description	Date

CHECKED BY: DGL

DRAWN BY: DAA/MRC

TYPICAL DETAILS No. 3

SX1.3

PBK
www.pbk.com
TX FIRM REGISTRATION #608
HOUSTON, TX
713-665-0008

Plot Stamp:
6/19/2026 3:51:42 PM

TYPICAL DETAILS No. 4
SX1.4
FOR BLUEBEAM LABELING/DOCR:

0"
1"

SECTION PROPERTIES @ 100%

JOIST TYPE	D	W	H	EI (JOIST) 10^6 LBS-IN^2	M ALLOW FT-LBS	V ALLOW LBS
RED-I65	11 7/8"	2 1/2"	1 1/2"	450	6,750	2,255
RED-I65	14"	2 1/2"	1 1/2"	666	8,030	2,540
RED-I65	16"	2 1/2"	1 1/2"	913	9,210	2,810
RED-I65	18"	2 1/2"	1 1/2"	1,205	10,380	3,080
RED-I65	20"	2 1/2"	1 1/2"	1,545	11,540	3,345
RED-I65	22"	2 1/2"	1 1/2"	1,934	12,690	3,615
RED-I65	24"	2 1/2"	1 1/2"	2,374	13,830	3,200
RED-I65	26"	2 1/2"	1 1/2"	2,868	14,960	3,200
RED-I65	28"	2 1/2"	1 1/2"	3,417	16,085	3,200
RED-I65	30"	2 1/2"	1 1/2"	4,025	17,205	3,200
RED-I90	11 7/8"	3 1/2"	1 1/2"	621	9,605	2,255
RED-I90	14"	3 1/2"	1 1/2"	913	11,430	2,540
RED-I90	16"	3 1/2"	1 1/2"	1,246	13,115	2,810
RED-I90	18"	3 1/2"	1 1/2"	1,635	14,785	3,080
RED-I90	20"	3 1/2"	1 1/2"	2,085	16,435	3,345
RED-I90	22"	3 1/2"	1 1/2"	2,597	18,075	3,615
RED-I90	24"	3 1/2"	1 1/2"	3,172	19,700	3,400
RED-I90	26"	3 1/2"	1 1/2"	3,814	21,315	3,400
RED-I90	28"	3 1/2"	1 1/2"	4,525	22,915	3,400
RED-I90	30"	3 1/2"	1 1/2"	5,306	24,510	3,400

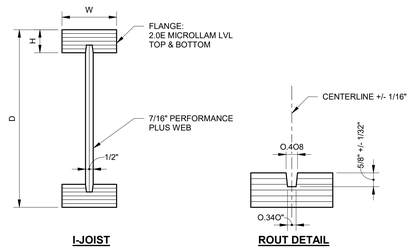

I-JOIST **ROUT DETAIL**

SECTION PROPERTIES @ 100%

JOIST TYPE	D	W	H	EI (JOIST) 10^6 LBS-IN^2	M ALLOW FT-LBS	V ALLOW LBS
RED-I65	11 7/8"	2 1/2"	1 1/2"	450	6,750	2,255

NOTE: FLANGE TOLERANCE 1/32" +/-

I-JOIST SECTION PROPERTIES — 1 / SX1.4
NO SCALE

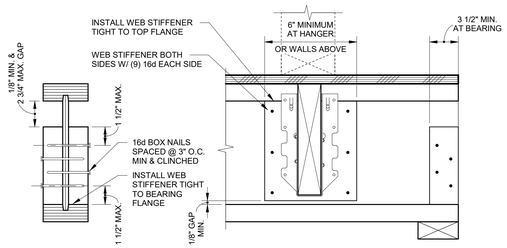

WEB STIFFENER SECTION **WEB STIFFENER ELEVATION**

NOTE:
1. PROVIDE MINIMUM BEARING OF 2 1/2" AT JOIST ENDS AND 5 1/4" AT INTERMEDIATE SUPPORTS U.N.O. ON STRUCTURAL DRAWINGS. NAIL JOISTS AT BEARING WITH 2-10d NAILS (ONE EACH SIDE), 1 1/2" MINIMUM FROM END TO AVOID SPLITTING. ALL BLOCKING SHALL BE GLUED TO WEB.
2. WEB STIFFENERS TO BE MANUFACTURER OR FIELD INSTALLED AT ALL BEARING AND JOIST HANGER LOCATIONS.
3. SEE MANUFACTURER SPECIFICATIONS FOR WEB STIFFENER THICKNESS AND FASTENER INFORMATION.
4. IF MANUFACTURER FASTENER INFORMATION DIFFERS FROM THIS DETAIL, FOLLOW THE MANUFACTURER'S REQUIREMENTS.
5. WHERE BEARING OCCURS AT TOP AND BOTTOM FLANGE, STIFFENER SHALL BE FULL DEPTH OF WEB.

I - JOIST WEB STIFFENER — 2 / SX1.4
NO SCALE

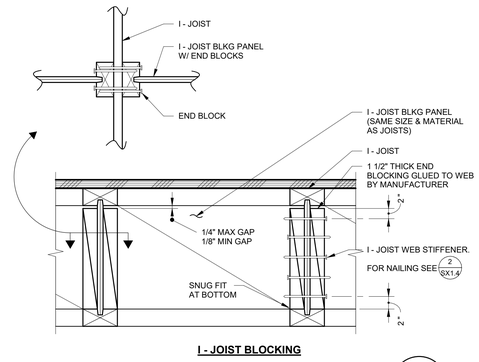

I - JOIST BLOCKING

I - JOIST BLOCKING — 3 / SX1.4
NO SCALE

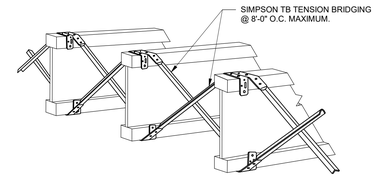

NOTE:
1. TENSION BRIDGING IS REQUIRED AT 8'-0" O.C. IN FLOORS & ROOFS, U.N.O.
2. TENSION BRIDGING SHALL BE USED IN CROSS PAIRS FULL LENGTH OF FLOOR.
3. INSTALL BRIDGING TIGHTLY.
4. REFER TO MANUFACTURER FOR ADDITIONAL INFORMATION.

I-JOIST CROSS BRIDGING — 4 / SX1.4
NO SCALE

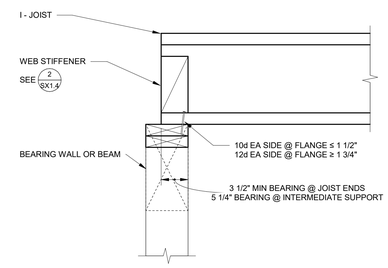

I - JOIST BEARING — 5 / SX1.4
NO SCALE

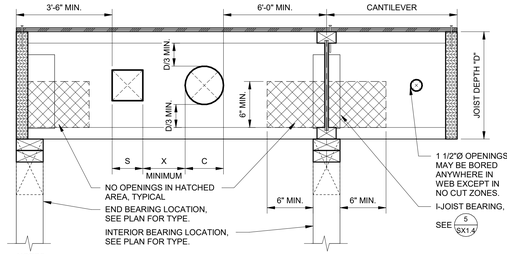

NOTES:
1. ALL OPENINGS LARGER THAN 1 1/2"Ø MUST BE PLACED IN CENTER THIRD OF I-JOIST DEPTH.
2. MAXIMUM SQUARE OPENING SIZE (S) IS 4" SQUARE.
3. MAXIMUM ROUND OPENING SIZE (C) IS WEB DEPTH/3 OR 5"Ø, WHICHEVER IS LESS.
4. DO NOT CUT FLANGE.
5. WHERE LARGER OPENINGS ARE REQUIRED CONTACT STRUCTURAL ENGINEER PRIOR TO CUTTING FOR ADDITIONAL REINFORCEMENT INFORMATION.
6. THE MINIMUM SPACING "X" SHALL BE THE GREATER OF 2 x S OR 2 x C.
7. NO OPENINGS LARGER THAN 1 1/2" Ø ALLOWED IN CANTILEVER.
8. USE 1/4"Ø PILOT HOLE @ CORNERS OF SQUARE/RECTANGULAR OPENINGS TO PREVENT OVER-CUTTING.

ALLOWABLE OPENINGS IN I-JOISTS — 6 / SX1.4
NO SCALE

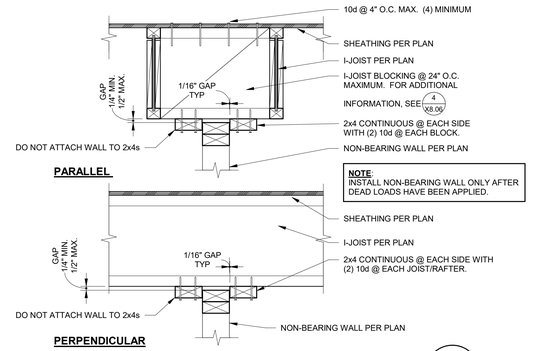

NOTE:
INSTALL NON-BEARING WALL ONLY AFTER DEAD LOADS HAVE BEEN APPLIED.

NON-BEARING WALL — 7 / SX1.4
NO SCALE

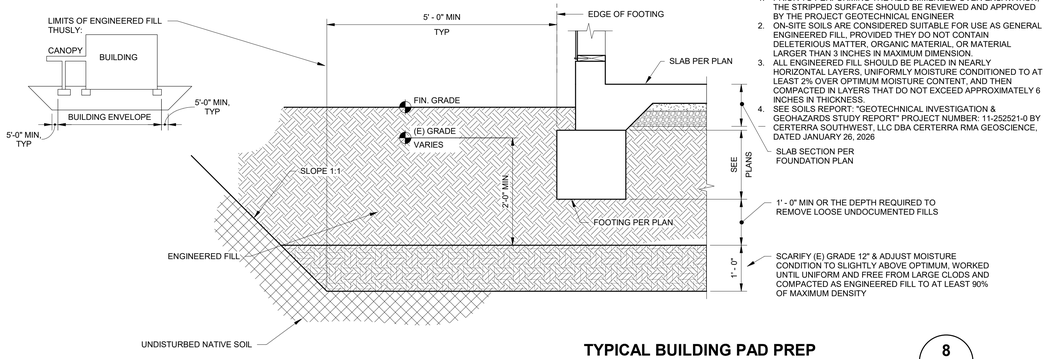

NOTES:
1. PRIOR TO PERFORMING THE RECOMMENDED OVER-EXCAVATION, THE STRIPPED SURFACE SHOULD BE REVIEWED AND APPROVED BY THE PROJECT GEOTECHNICAL ENGINEER
2. ON-SITE SOILS ARE CONSIDERED SUITABLE FOR USE AS GENERAL ENGINEERED FILL, PROVIDED THEY DO NOT CONTAIN DELETERIOUS MATTER, ORGANIC MATERIAL, OR MATERIAL LARGER THAN 3 INCHES IN MAXIMUM DIMENSION.
3. ALL ENGINEERED FILL SHOULD BE PLACED IN NEARLY HORIZONTAL LAYERS, UNIFORMLY MOISTURE CONDITIONED TO AT LEAST 2% OVER OPTIMUM MOISTURE CONTENT, AND THEN COMPACTED IN LAYERS THAT DO NOT EXCEED APPROXIMATELY 6 INCHES IN THICKNESS.
4. SEE SOILS REPORT, "GEOTECHNICAL INVESTIGATION & GEOHAZARDS STUDY REPORT" PROJECT NUMBER: 11-252521-0 BY CERTERRA SOUTHWEST, LLC DBA CERTERRA RMA GEOSCIENCE, DATED JANUARY 26, 2026

TYPICAL BUILDING PAD PREP — 8 / SX1.4
3/4" = 1'-0"

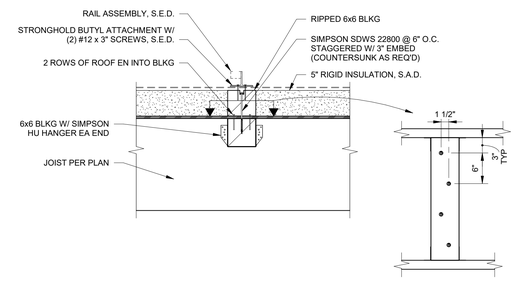

SOLAR ATTACHMENT — 9 / SX1.4
1" = 1'-0"

PARLIER HS STADIUM REPLACEMENT
603 3RD STREET
PARLIER, CA. 93648

DSA BACKCHECK 2

PBK
HOUSTON, TX
713-665-0008
TX FIRM: BR 1608
www.pbk.com

PARLIER UNIFIED SCHOOL DISTRICT

CORNERSTONE structural engineering group
9 River Park Place East, Suite 330
Fresno, California 93720
559.320.3200
fax 559.320.3201

REGISTERED PROFESSIONAL ENGINEER — JUSTIN G. [illegible]
No. S6623
EXP. 3/31/27
STRUCTURAL
STATE OF CALIFORNIA

CLIENT: PARLIER UNIFIED SCHOOL DISTRICT
DATE: 6/19/26
PROJECT NUMBER: 250093

DRAWING HISTORY

No.	Description	Date

CHECKED BY: DGL
DRAWN BY: DAA/MRC

TYPICAL DETAILS No. 4

SX1.4

Plot Stamp:
6/19/2026 3:51:43 PM

TYPICAL DETAILS No. 5
SX1.5

FOR BLUEBEAM LABELING/DOOR:

0"
1"

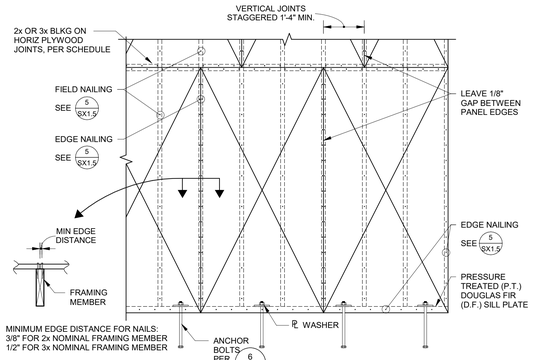

NOTES:

1. HOLDOWN BOLTS SHALL NOT REPLACE ANCHOR BOLTS.
2. RETIGHTEN ALL ANCHOR BOLTS AND HOLDOWN NUTS PRIOR TO CLOSING FRAMING.
3. NAILS SHALL BE COMMON AND HAVE MIN 1 5/8" PENETRATION INTO HOLDING MEMBER.
4. PREDRILL HOLES AS REQUIRED TO AVOID SPLITTING.
5. MINIMUM PLYWOOD WIDTH IS 12".
6. UPSET THREAD BOLTS ARE NOT PERMITTED.

ELEVATION

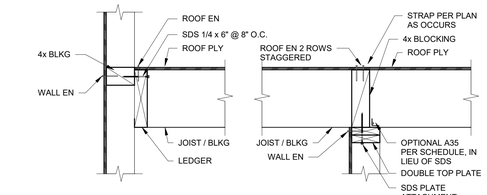

ROOF **ROOF**

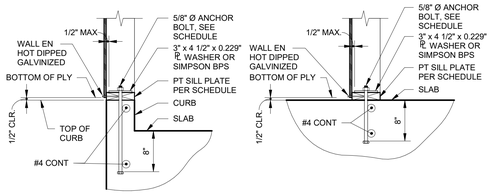

FOUNDATION **FOUNDATION**

TYPICAL EXTERIOR WALL

TYPICAL INTERIOR WALL

NOTES:

1. FRAMING AND CONNECTIONS SHOWN ARE FOR LATERAL SYSTEM LOAD TRANSFER ONLY. SEE PLANS AND DETAILS FOR ADDITIONAL VERTICAL SUPPORT FRAMING.
2. PROVIDE STANDARD CUT WASHER BETWEEN NUT & BPS PLATE.

SHEARWALL SCHEDULE - WOOD

ZONE	ALLOWABLE SHEAR	PLYWOOD	EDGE NAILING	FIELD NAILING	BOLTED PLATE CONNECTION	SCREWED PLATE CONNECTION	BLOCKING	A35 SPACING	REMARKS
A	310 PLF	15/32" CDX	10d @ 6" OC	10d @ 12" OC	AB @ 48" OC	1/4" x 6" SDS @ 16" OC	2x	24" OC	1, 3, 4
B	460 PLF	15/32" CDX	10d @ 4" OC	10d @ 12" OC	AB @ 32" OC	1/4 x 6" SDS @ 12" OC	3x	16" OC	2, 3, 4
C	600 PLF	15/32" CDX	10d @ 3" OC	10d @ 12" OC	AB @ 24" OC	1/4 x 6" SDS @ 8" OC	3x	12" OC	2, 3, 4
D	770 PLF	15/32" CDX	10d @ 2" OC	10d @ 12" OC	AB @ 16" OC	1/4 x 6" SDS @ 8" OC	3x	8" OC	2, 3, 4

NOTE:
WHEN PLY IS SHOWN BOTH SIDES, OFFSET PANEL JOINTS EACH SIDE OF WALL TO FALL ON DIFFERENT FRAMING MEMBERS. INSTALL 3x OR WIDER FRAMING & BLOCKING AT ALL ADJOINING PANEL EDGES. ANCHOR BOLT, SCREW & A35/LTP4 SPACING SHOULD BE HALVED.

REMARKS:

1. INSTALL 2x OR WIDER FRAMING & BLOCKING AT ALL ADJOINING PANEL EDGES.
2. INSTALL 3x OR WIDER FRAMING & BLOCKING WITH STAGGERED EDGE NAILING AT ALL ADJOINING PANEL EDGES. STRUCTURALLY ACCEPTABLE TO USE (2) 2x INSTEAD OF 3x AT ADJOINING PANEL EDGES. NAIL (2) 2x TOGETHER WITH 16d STAGGERED @ WALL EDGE NAIL SPACING.
3. FASTENERS SHALL BE COMMON.
4. PLYWOOD SHALL BE EDGE FASTENED AT ALL PANEL EDGES, TOP PLATES, SILL PLATES, HOLDOWN STUDS, WOOD POSTS AND BLOCKING LOCATIONS AS WELL AS OTHER LOCATIONS SHOWN IN THE DRAWINGS.
5. WHEN NAILING IS SPECIFIED AT AN (E) 2x STUDWALL, PROVIDE ADDITIONAL 2x FRAMING AT PANEL EDGES. EDGE NAIL ONE PANEL TO EA 2x STAGGERED PER SCHEDULE. INTERNAIL DOUBLE 2x W/ 2 ROWS OF 10d @ 8" OC STAGGERED.

PLYWOOD SHEARWALL

NO SCALE

1 SX1.5

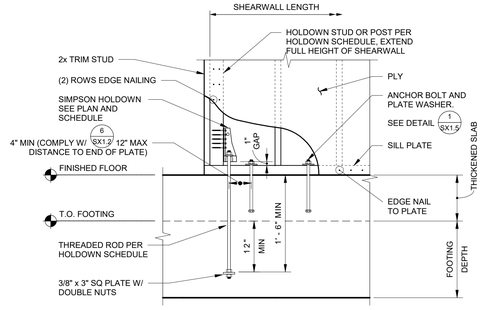

HDU HOLDOWN

HOLDOWN SCHEDULE - SIMPSON STRONG-TIE WOOD

TYPE	DESCRIPTION	No. OF SDS 1/4x SCREW TO POST	HS THREADED ROD SIZE	END POST	SERVICE LOAD CAPACITY
1	HDUE3-SDS3	7	5/8"	4x6 MIN.	3,032#
2	HDUE7-SDS3	13	5/8"	4x6 MIN.	5,612#
3	HDUE9-SDS3.5	16	7/8"	4x6 MIN.	7,512#
4	HDUE13-SDS3.5	23	1"	6x	10,488#

HOLDOWN AT FOOTING

NO SCALE

2 SX1.5

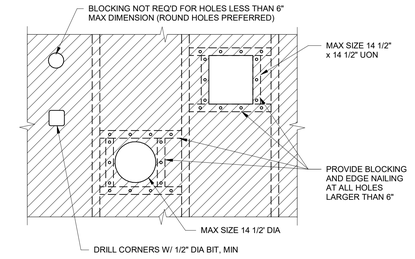

HOLES IN SHEARWALL (CUTTING NO STUDS)

NO SCALE

3 SX1.5

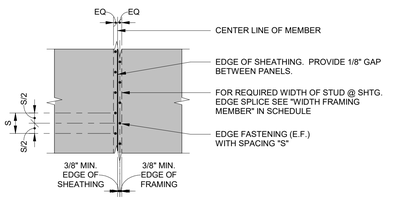

SHEAR PANEL FASTENING AT EDGE/BLOCKING

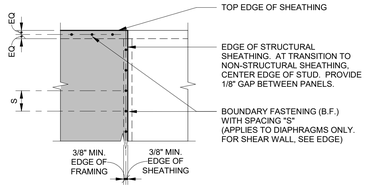

SHEAR PANEL FASTENING AT BOUNDARY

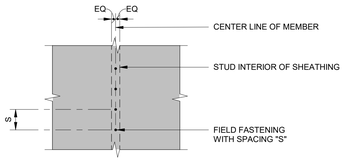

SHEAR PANEL FASTENING AT FIELD/INTERMEDIATE STUD

NOTE: THE FASTENING DESIGNATION 6:6:12 INDICATES (6" O.C. EDGE):(6" O.C. BOUNDARY):(12" O.C. FIELD)

PLY EDGE/BOUNDARY FASTENING

NO SCALE

5 SX1.5

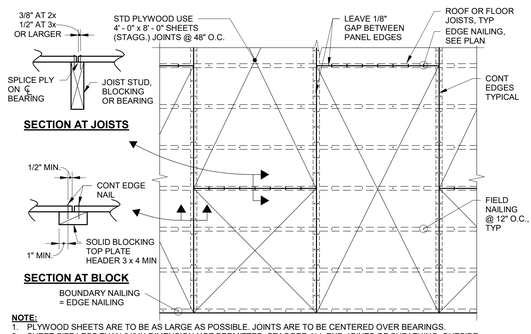

NOTE:
1. PLYWOOD SHEETS ARE TO BE AS LARGE AS POSSIBLE. JOINTS ARE TO BE CENTERED OVER BEARINGS.
2. SHEET SIZE LESS THAN 24" IN DIMENSION NOT PERMITTED. STAGGER ALL END JOINTS OF SHEATHING. OUTSIDE FACE GRAINS TO RUN PERPENDICULAR TO BEARING. BLOCKING ALL JOINTS AND EDGES.

PLYWOOD DIAPHRAGM FRAMING

NO SCALE

4 SX1.5

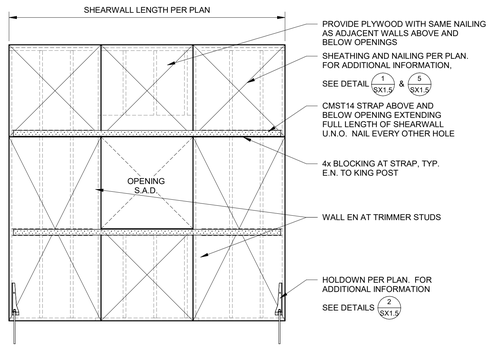

STRAPPED SHEARWALL ELEVATION

NO SCALE

6 SX1.5

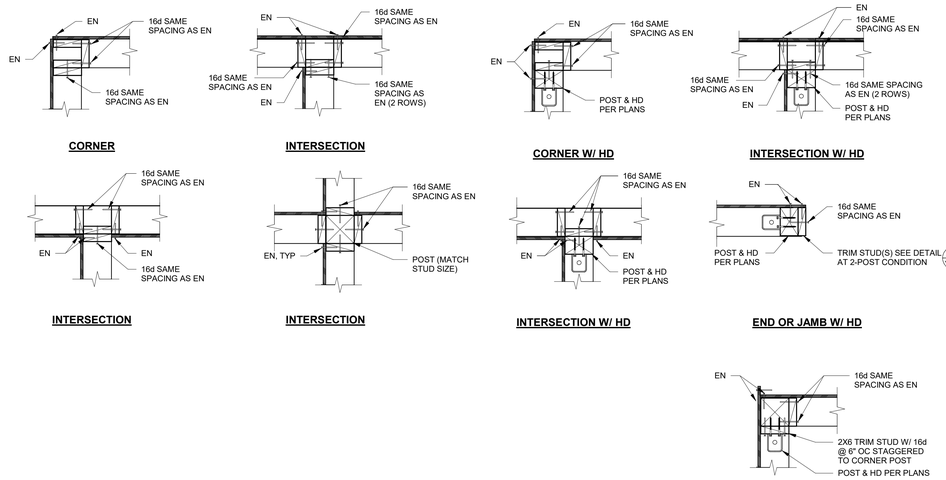

PLAN VIEW OF SHEARWALL DETAILS

NO SCALE

7 SX1.5

PARLIER HS STADIUM REPLACEMENT
603 3RD STREET
PARLIER, CA. 93648

DSA BACKCHECK 2

PARLIER UNIFIED SCHOOL DISTRICT

CORNERSTONE structural engineering group
9 River Park Place East, Suite 330
Fresno, California 93720
559.320.3200
fax 559.320.3201

REGISTERED PROFESSIONAL ENGINEER
JUSTIN G. LEWIS
No. 56623
EXP. 3/31/27
STRUCTURAL
STATE OF CALIFORNIA

PBK
www.pbk.com
TX FIRM: BR 1608
HOUSTON, TX
713-665-0008

CLIENT
PARLIER UNIFIED SCHOOL DISTRICT

DATE	PROJECT NUMBER
6/19/26	250093

DRAWING HISTORY

No.	Description	Date

CHECKED BY: DGL
DRAWN BY: DAA/MRC

TYPICAL DETAILS No. 5

SX1.5

Plot Stamp:
6/19/2026 3:51:44 PM

TYPICAL DETAILS No. 6
SX1.6
FOR BLUEBEAM LABELING/OCR:

0"
1"

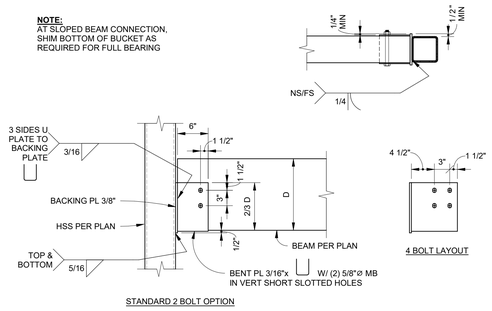

LVL TO HSS COLUMN BUCKET

1" = 1'-0"

1 / SX1.6

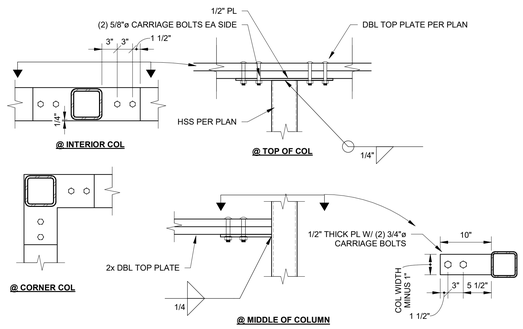

HSS COLUMN AT TOP PLATE

1" = 1'-0"

2 / SX1.6

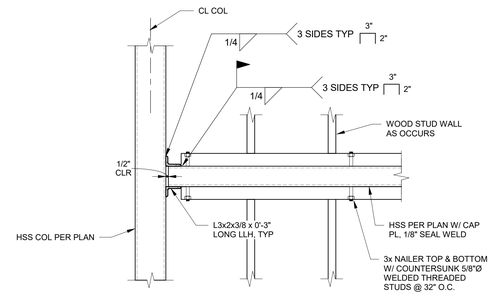

TYPICAL HSS BEAM TO HSS COLUMN CONNECTION AT CANOPY

1" = 1'-0"

3 / SX1.6

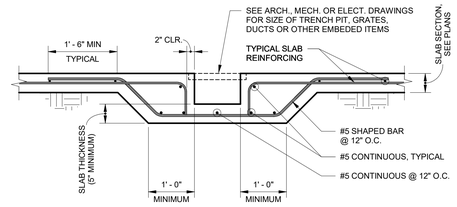

SLAB TRENCH / PIT

NO SCALE

4 / SX1.6

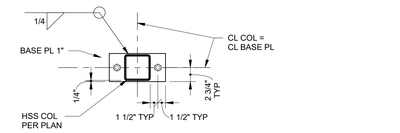

HSS COLUMN - RECTANGULAR PL

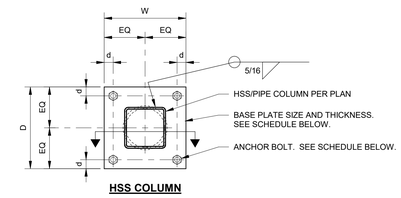

HSS COLUMN

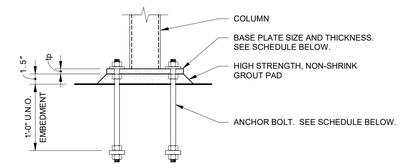

SECTION VIEW

STEEL COLUMN PLATE SCHEDULE (2)						
COLUMN	BASE PLATE					ANCHOR BOLT (1)
	D	W	tp	d	GRADE	
HSS5x	11"	11"	3/4"	1 1/2"	A36 (36KSI)	(4) 3/4"Ø
HSS7x	15"	15"	1"	2"	A36 (36KSI)	(4) 1"Ø
HSS8x	16"	16"	1 1/2"	2"	A36 (36KSI)	(4) 1 1/4"Ø
HSS10x6	16"	12"	1 1/2"	2"	A36 (36KSI)	(4) 1"Ø

NOTES:
1. FOR ADDITIONAL ANCHOR BOLT REQUIRMENTS, SEE DETAIL 8/SX1.6
2. ALL BASE PLATE SHALL CONFORM TO THESE REQUIREMENTS UNLESS OTHERWISE NOTED.

BASE PLATE DETAIL

NO SCALE

5 / SX1.6

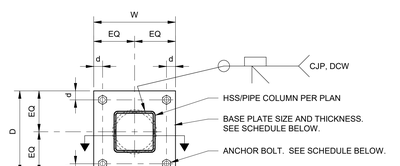

HSS COLUMN

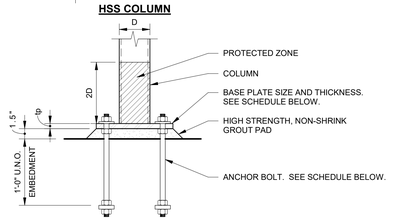

SECTION VIEW

STEEL COLUMN PLATE SCHEDULE (2)						
COLUMN	BASE PLATE					ANCHOR BOLT (1)
	D	W	tp	d	GRADE	
HSS8.625x	18"	18"	1 1/2"	2"	A36 (36KSI)	(4) 1 1/4"Ø
HSS6x6 @ CANOPY	SEE SPECIFIC DETAIL H/SX4.1					

NOTES:
1. FOR ADDITIONAL ANCHOR BOLT REQUIRMENTS, SEE DETAIL 8/SX1.6
2. ALL BASE PLATE SHALL CONFORM TO THESE REQUIREMENTS UNLESS OTHERWISE NOTED.

BASE PLATE DETAIL @ LFRS COLUMN

1" = 1'-0"

6 / SX1.6

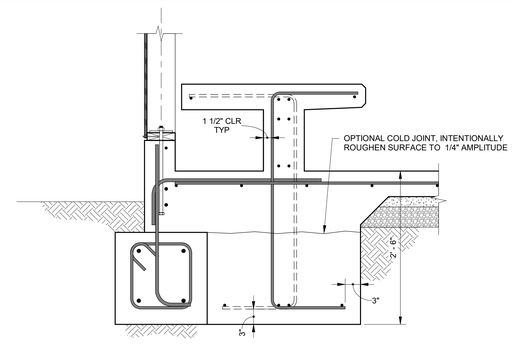

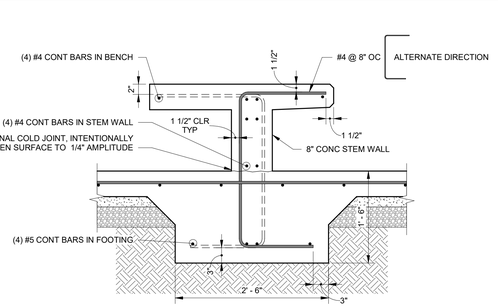

LOCKER BENCH DETAIL

1" = 1'-0"

7 / SX1.6

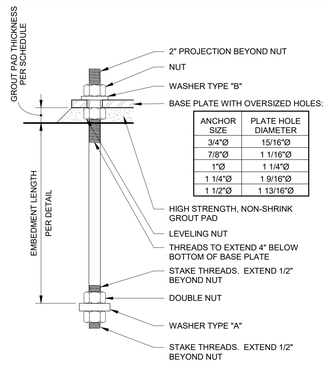

ANCHOR SIZE	PLATE HOLE DIAMETER
3/4"Ø	15/16"Ø
7/8"Ø	1 1/16"Ø
1"Ø	1 1/4"Ø
1 1/4"Ø	1 9/16"Ø
1 1/2"Ø	1 13/16"Ø

ANCHOR ROD		WASHER [1]		HEX NUT	GROUT PAD THICKNESS
SIZE	MATERIAL	TYPE	SIZE		
3/4"Ø	F1554 GRADE 36	A	3"x1/2"x0'-3" PLATE W/ 13/16"Ø HOLE CENTERED	ASTM A563	1.5"
		B (2)	2"x1/4" PLATE* W/ 13/16"Ø HOLE CENTERED		
7/8"Ø	F1554 GRADE 36	A	3"x3/4"x0'-3" PLATE W/ 15/16"Ø HOLE CENTERED	ASTM A563	1.5"
		B (2)	2 1/2"x5/16" PLATE* W/ 15/16"Ø HOLE CENTERED		
1"Ø	F1554 GRADE 36	A	3"x3/4"x0'-3" PLATE W/ 1 1/16"Ø HOLE CENTERED	ASTM A563	1.5"
		B (2)	3"x3/8" PLATE* W/ 1 1/16"Ø HOLE CENTERED		
1 1/4"Ø	F1554 GRADE 36	A	3 1/2"x1"x0'-3 1/2" PLATE W/ 1 5/16"Ø HOLE CENTERED	ASTM A563	1.5"
		B (2)	3"x1/2" PLATE* W/ 1 5/16"Ø HOLE CENTERED		

1. CIRCULAR OR SQUARE WASHERS MEETING THE WASHER SIZE ARE ACCEPTABLE.

ANCHOR BOLT

NO SCALE

8 / SX1.6

Plot Stamp:
6/19/2026 3:51:44 PM

PARLIER HS STADIUM REPLACEMENT

603 3RD STREET
PARLIER, CA. 93648

DSA BACKCHECK 2

PBK
www.pbk.com
TX FIRM: BR 1608
HOUSTON, TX
713-665-0008

PARLIER UNIFIED SCHOOL DISTRICT

CORNERSTONE structural engineering group
9 River Park Place East, Suite 330
Fresno, California 93720
559.320.3200
fax 559.320.3201

REGISTERED PROFESSIONAL ENGINEER
JUSTIN G. [illegible]
No. S6623
EXP. 3/31/27
STRUCTURAL
STATE OF CALIFORNIA

CLIENT
PARLIER UNIFIED SCHOOL DISTRICT

DATE	PROJECT NUMBER
6/19/26	250093

DRAWING HISTORY

No.	Description	Date
4	Addendum 4	6/12/26

CHECKED BY: DGL
DRAWN BY: DAA/MRC

TYPICAL DETAILS No. 6

SX1.6

SITE DETAILS
SX3.1
FOR BLUEBEAM LABELING/OCR:

NOTES:
1. ALL STEEL IN THIS DETAIL WILL BE EXPOSED TO WEATHER, USE TWO COATS OF SEMI-GLOSS ALKYD ENAMEL COMPATIBLE WITH PRIMER.

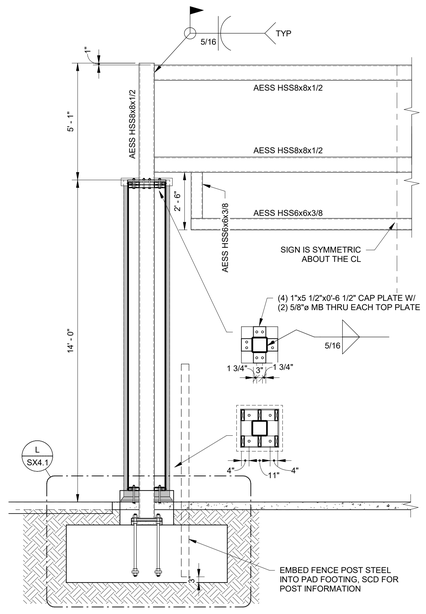

ENTRY WAY DETAIL
3/8" = 1'-0"
A
SX3.1

NOTES:
1. SCOREBOARD IS A PART OF DEDUCT ALTERNATE 2.

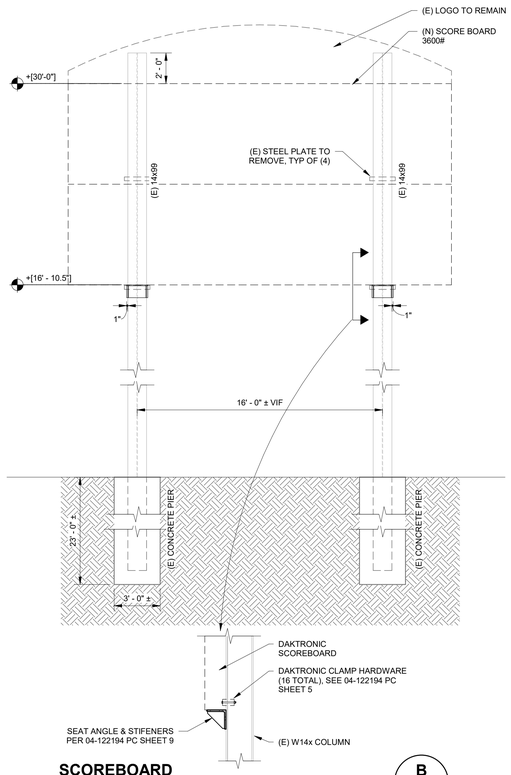

SCOREBOARD
1/4" = 1'-0"
B
SX3.1

PBK

HOUSTON, TX
713-965-6608

TX FIRM: BR 1608

www.pbk.com

PARLIER HS STADIUM REPLACEMENT

603 3RD STREET
PARLIER, CA 93648

DSA BACKCHECK 2

PARLIER UNIFIED SCHOOL DISTRICT

CORNERSTONE
structural engineering group
9 River Park Place East, Suite 330
Fresno, California 93720
559.320.3200
fax 559.320.3201

REGISTERED PROFESSIONAL ENGINEER
DUSTIN G. LEE
No. S6623
EXP. 3/31/27
STRUCTURAL
STATE OF CALIFORNIA

CLIENT
PARLIER UNIFIED SCHOOL DISTRICT

DATE	PROJECT NUMBER
6/19/26	250093

DRAWING HISTORY

No.	Description	Date
4	Addendum 4	6/12/26

CHECKED BY: DGL
DRAWN BY: DAA/MRC

SITE DETAILS

SX3.1

Plot Stamp:
6/19/2026 3:51:45 PM

FOUNDATION DETAILS
SX4.1

FOR BLUEBEAM LABELING/DOCR:

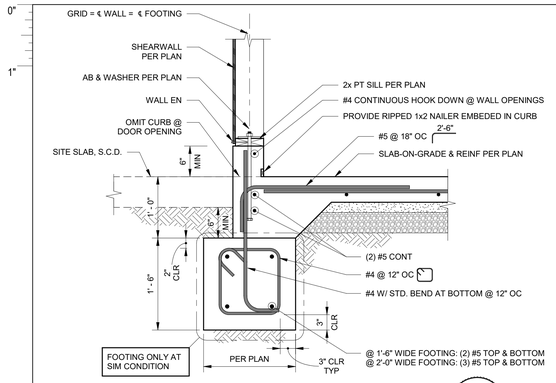

SECTION A SX4.1
1" = 1'-0"

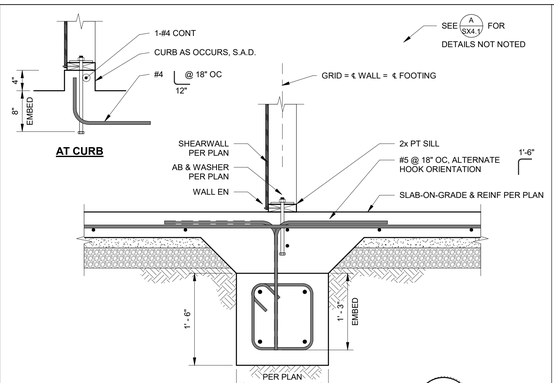

SECTION B SX4.1
1" = 1'-0"

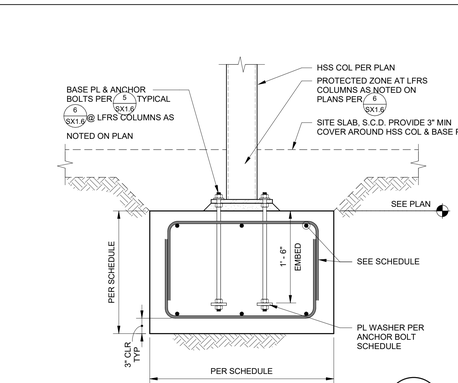

SECTION C SX4.1
1" = 1'-0"

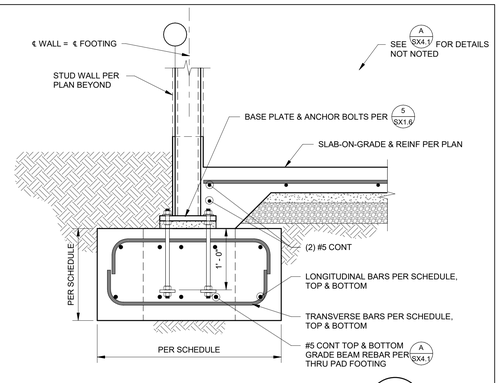

SECTION D SX4.1
1" = 1'-0"

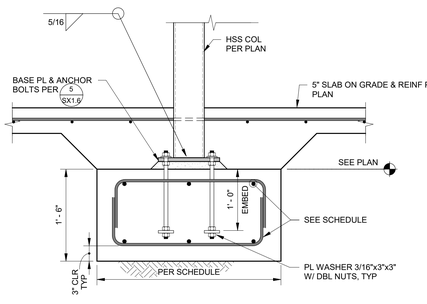

SECTION E SX4.1
1" = 1'-0"

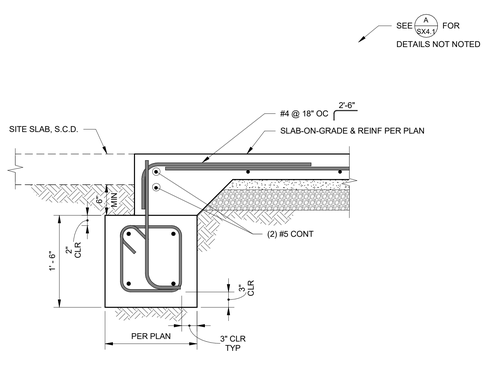

SECTION F SX4.1
1" = 1'-0"

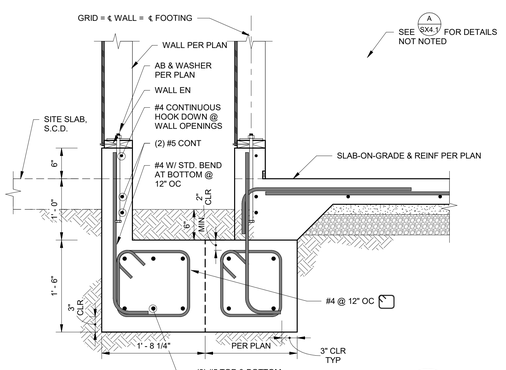

SECTION G SX4.1
1" = 1'-0"

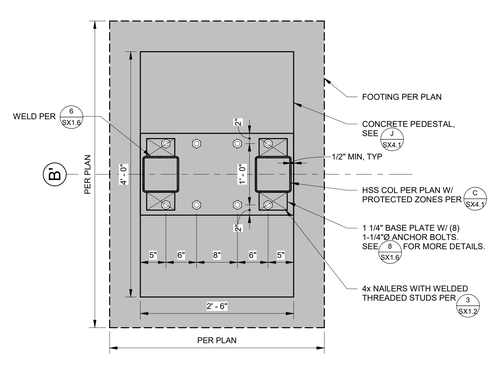

DETAIL H SX4.1
1" = 1'-0"

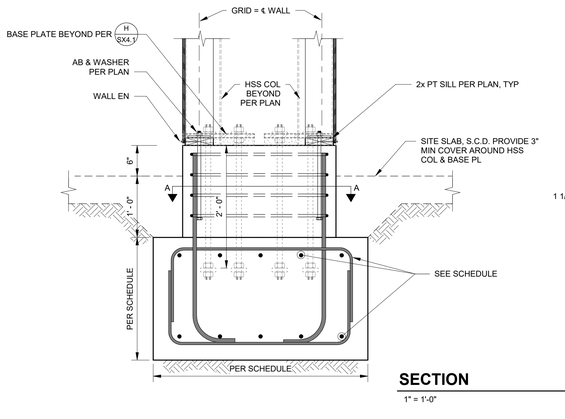

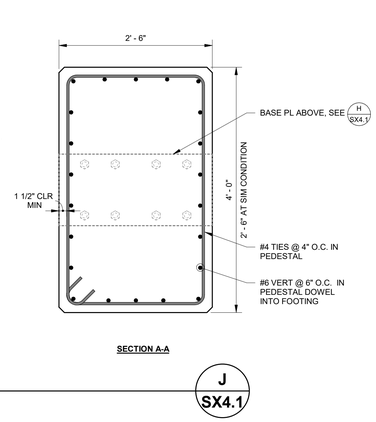

SECTION J SX4.1
1" = 1'-0"

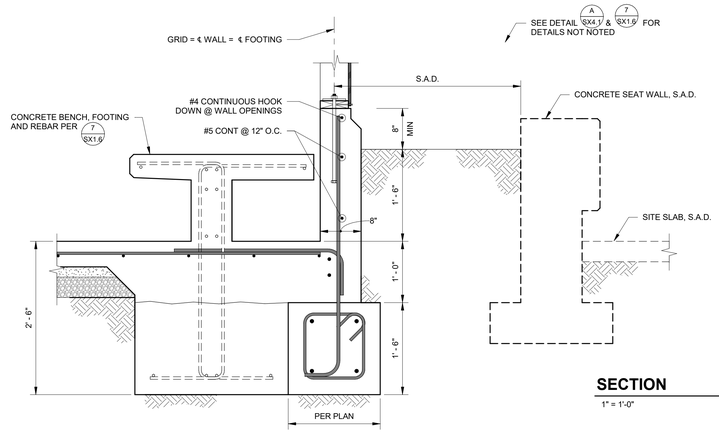

SECTION K SX4.1
1" = 1'-0"

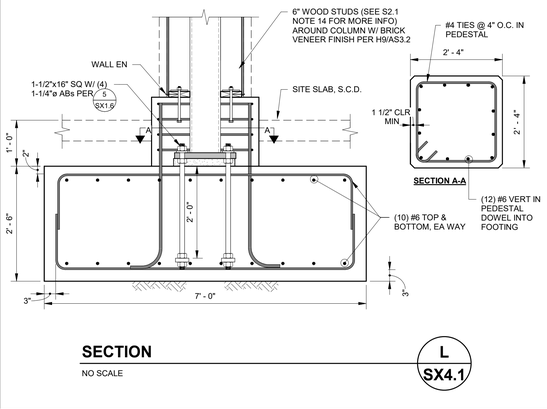

SECTION L SX4.1
NO SCALE

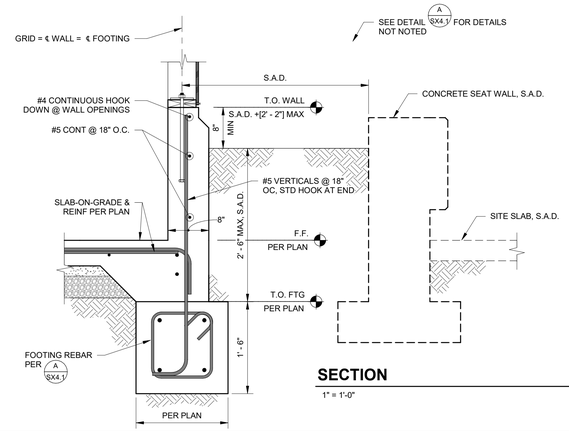

SECTION M SX4.1
1" = 1'-0"

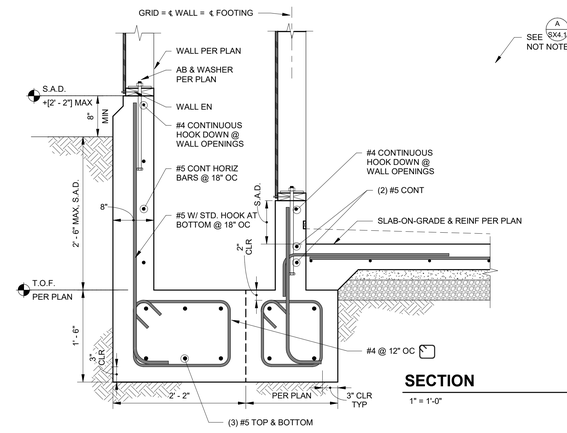

SECTION N SX4.1
1" = 1'-0"

Plot Stamp:
6/19/2026 3:51:45 PM

PBK

www.pbk.com
TX FIRM: BR 1608
HOUSTON, TX
713-665-0008

PARLIER HS STADIUM REPLACEMENT

603 3RD STREET
PARLIER, CA, 93648

DSA BACKCHECK 2

PARLIER UNIFIED SCHOOL DISTRICT

CORNERSTONE structural engineering group
9 River Park Place East, Suite 330
Fresno, California 93720
559.320.3200
fax 559.320.3201

REGISTERED PROFESSIONAL ENGINEER — JUSTIN G. CAMPBELL — No. S6623 EXP. 3/31/27 — STRUCTURAL — STATE OF CALIFORNIA

CLIENT
PARLIER UNIFIED SCHOOL DISTRICT

DATE	PROJECT NUMBER
6/19/26	250093

DRAWING HISTORY

No.	Description	Date
4	Addendum 4	6/12/26

CHECKED BY: DGL
DRAWN BY: DAA/MRC

FOUNDATION DETAILS

SX4.1

ROOF FRAMING DETAILS
SX4.2

FOR BLUEBEAM LABELING/OCR:

0"
1"

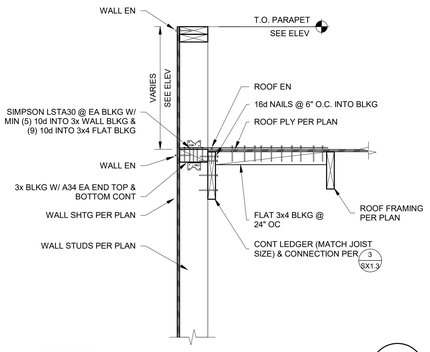

SECTION — 1" = 1'-0" — A / SX4.2

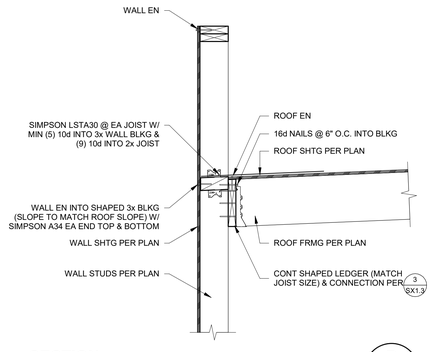

SECTION — 1" = 1'-0" — B / SX4.2

NOTE:
1. WHERE FRAMING IS SLOPED, BLOCKING IN WALL SHALL ALIGN WITH SLOPE.

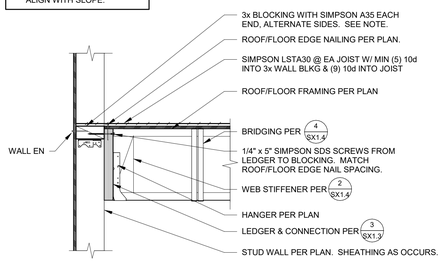

SECTION — NO SCALE — C / SX4.2

NOTE:
1. WHERE FRAMING IS SLOPED, BLOCKING IN WALL SHALL ALIGN WITH SLOPE.

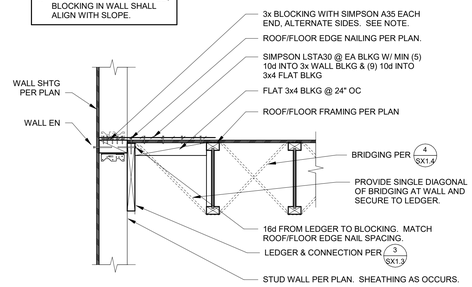

SECTION — NO SCALE — D / SX4.2

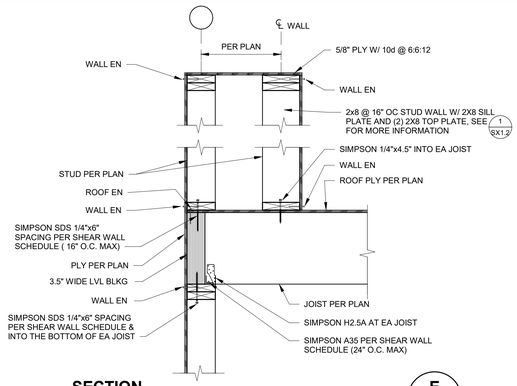

SECTION — 1" = 1'-0" — E / SX4.2

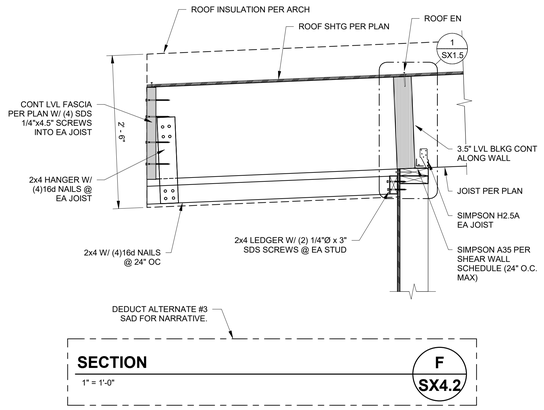

SECTION — 1" = 1'-0" — F / SX4.2

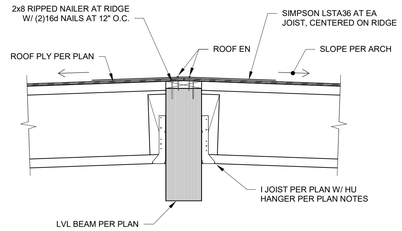

SECTION — 1" = 1'-0" — G / SX4.2

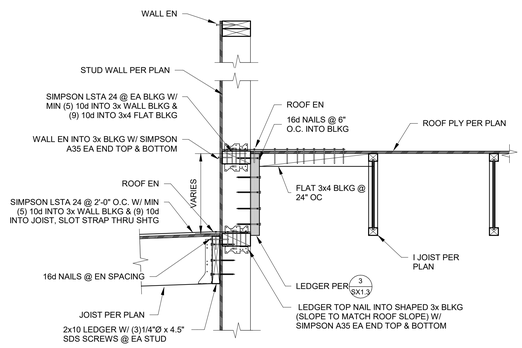

SECTION — 1" = 1'-0" — H / SX4.2

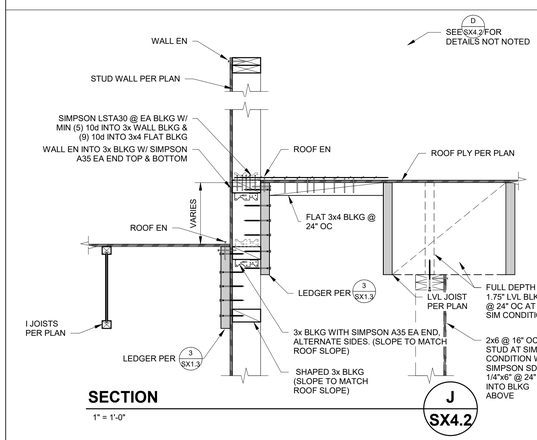

SECTION — 1" = 1'-0" — J / SX4.2

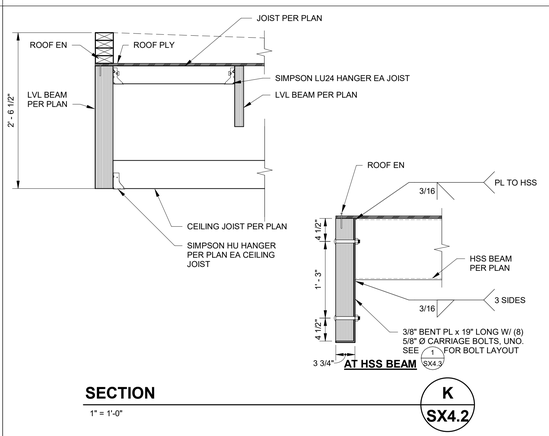

SECTION — 1" = 1'-0" — K / SX4.2

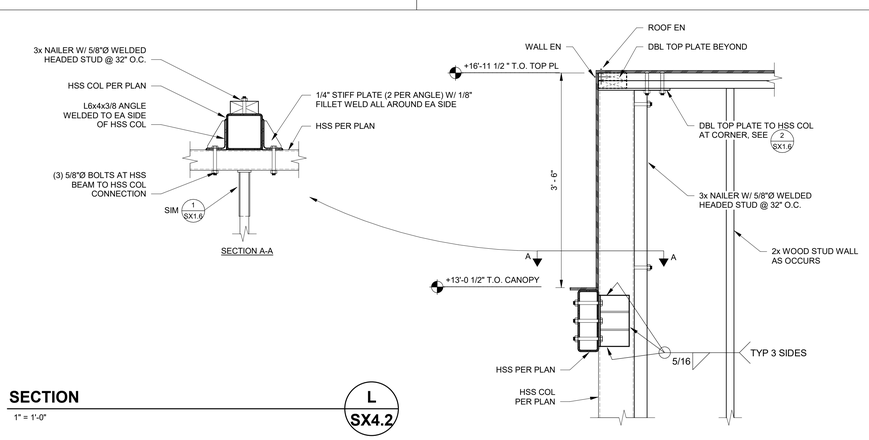

SECTION — 1" = 1'-0" — L / SX4.2

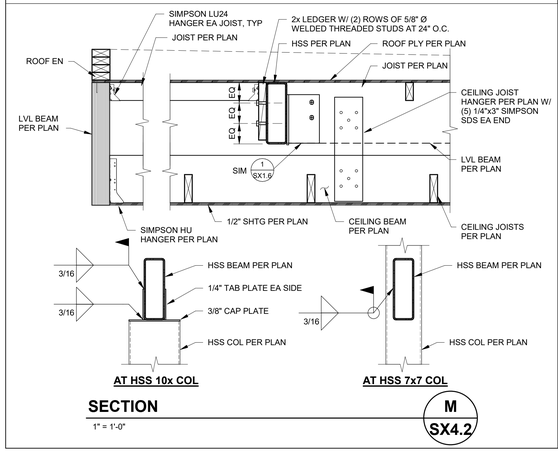

SECTION — 1" = 1'-0" — M / SX4.2

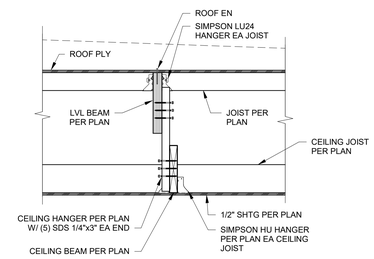

SECTION — 1" = 1'-0" — N / SX4.2

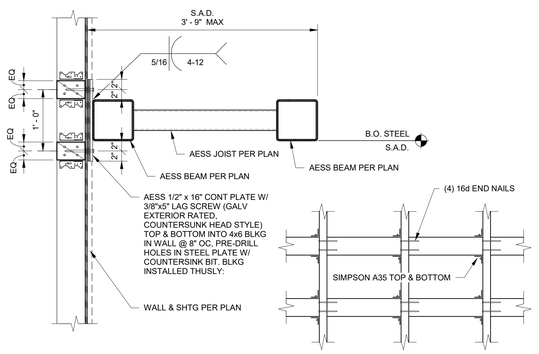

SECTION — 1" = 1'-0" — O / SX4.2

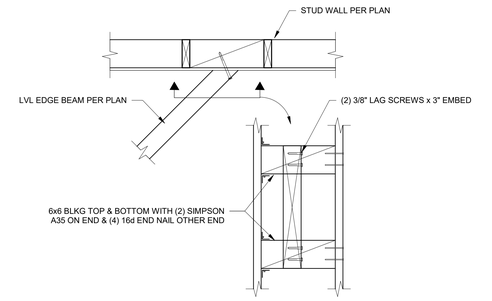

SECTION — 1" = 1'-0" — P / SX4.2

PBK

www.pbk.com

TX FIRM REGISTRATION # 1608

HOUSTON, TX
713-865-6008

PARLIER HS STADIUM REPLACEMENT

603 3RD STREET
PARLIER, CA. 93648

DSA BACKCHECK 2

PARLIER UNIFIED SCHOOL DISTRICT

CORNERSTONE
structural engineering group
9 River Park Place East, Suite 330
Fresno, California 93720
559.320.3200
fax 559.320.3201

REGISTERED PROFESSIONAL ENGINEER
JUSTIN G. LEE
No. S6623
EXP. 3/31/27
STRUCTURAL
STATE OF CALIFORNIA

CLIENT
PARLIER UNIFIED SCHOOL DISTRICT

DATE	PROJECT NUMBER
6/19/26	250093

DRAWING HISTORY

No.	Description	Date
4	Addendum 4	6/12/26

CHECKED BY: DGL

DRAWN BY: DAA/MRC

ROOF FRAMING DETAILS

SX4.2

Plot Stamp:
6/19/2026 3:51:46 PM

ROOF FRAMING DETAILS No. 2
SX4.3

FOR BLUEBEAM LABELING/OCR:

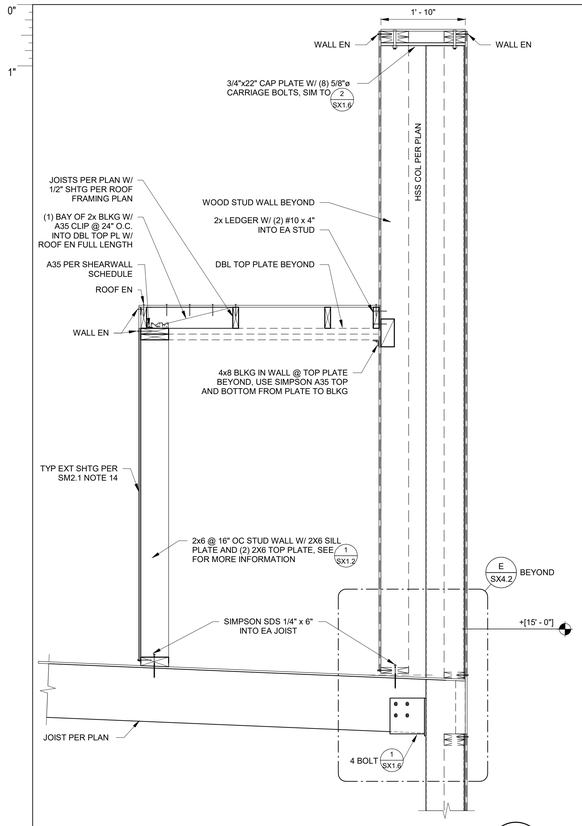

SECTION — 3/4" = 1'-0" — A SX4.3

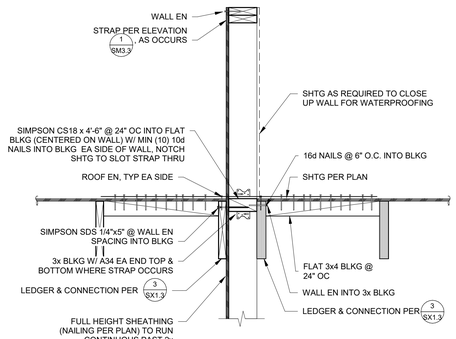

SECTION — 1" = 1'-0" — B SX4.3

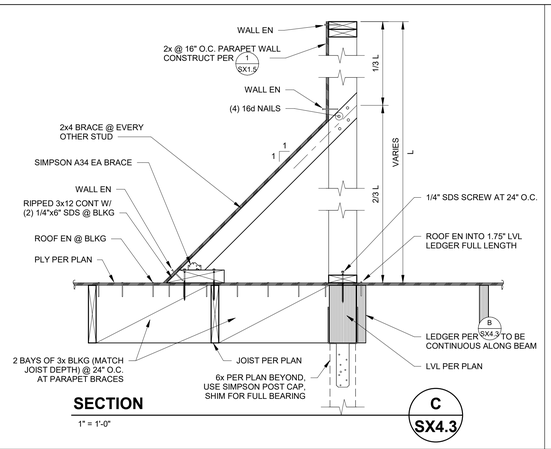

SECTION — 1" = 1'-0" — C SX4.3

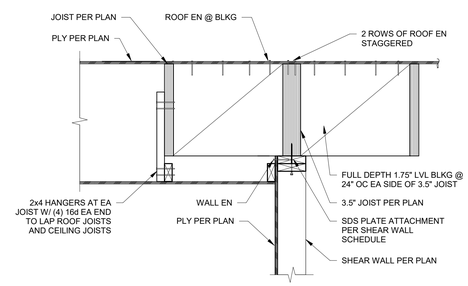

SECTION — 1" = 1'-0" — D SX4.3

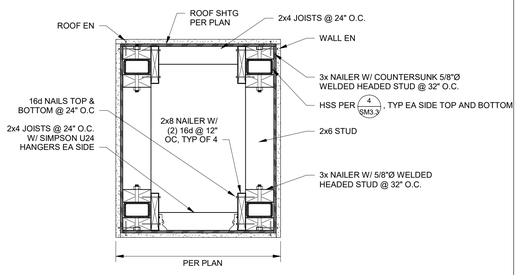

SECTION — 1" = 1'-0" — E SX4.3

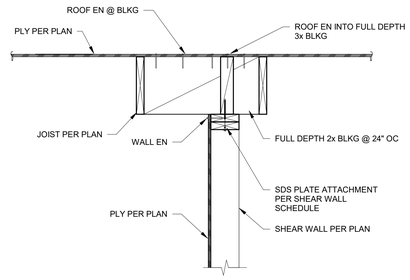

SECTION — 1" = 1'-0" — F SX4.3

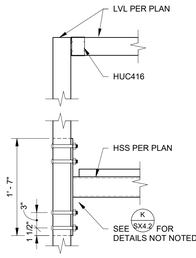

DETAIL — 1" = 1'-0" — 1 SX4.3

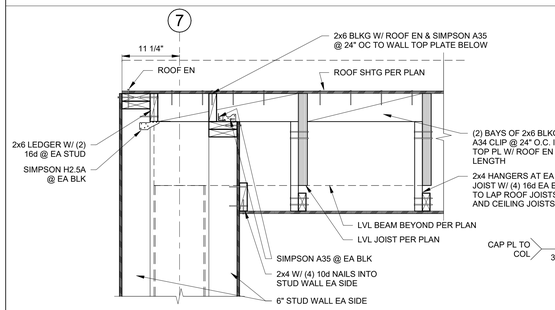

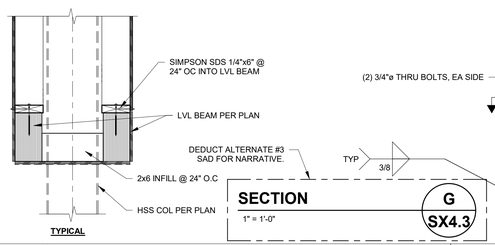

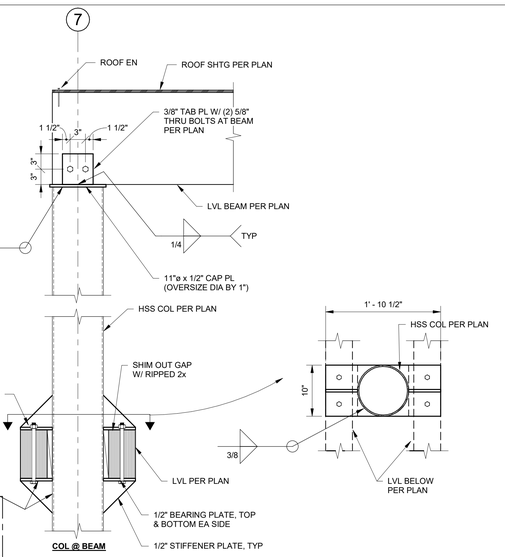

SECTION — 1" = 1'-0" — G SX4.3

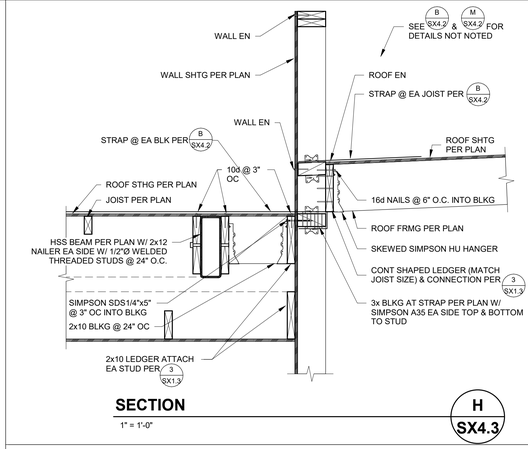

SECTION — 1" = 1'-0" — H SX4.3

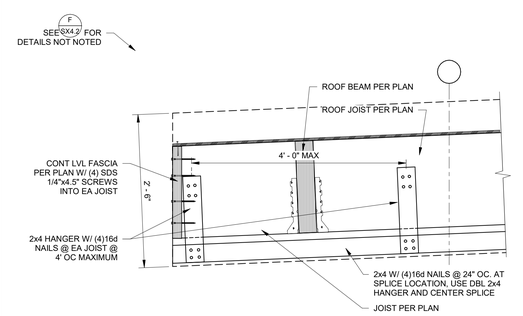

SECTION — 1" = 1'-0" — J SX4.3

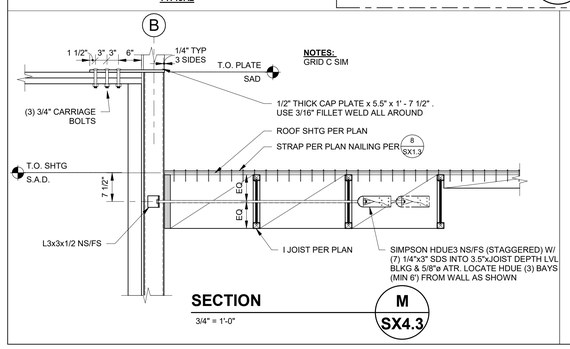

SECTION — 3/4" = 1'-0" — M SX4.3

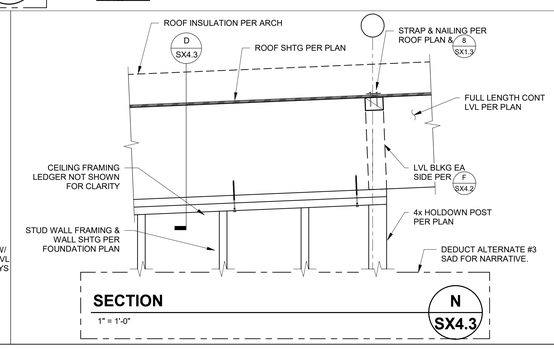

SECTION — 1" = 1'-0" — N SX4.3

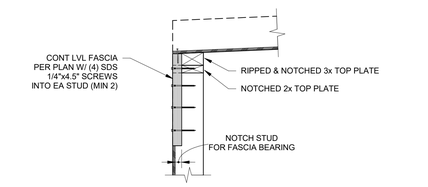

SECTION — 1" = 1'-0" — K SX4.3

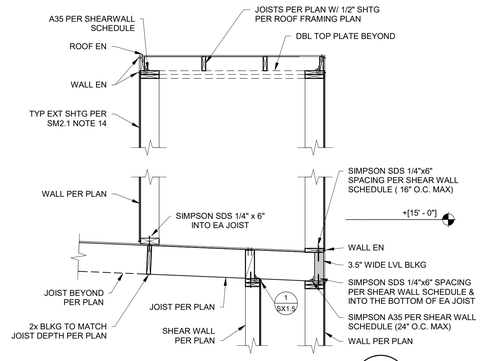

SECTION — 1/2" = 1'-0" — L SX4.3

PBK

www.pbk.com

TX FIRM: BR 1608

HOUSTON, TX
713-665-0008

PARLIER HS STADIUM REPLACEMENT

603 3RD STREET
PARLIER, CA, 93648

DSA BACKCHECK 2

PARLIER UNIFIED SCHOOL DISTRICT

CORNERSTONE
structural engineering group
9 River Park Place East, Suite 330
Fresno, California 93720
559.320.3200
fax 559.320.3201



CLIENT
PARLIER UNIFIED SCHOOL DISTRICT

DATE	PROJECT NUMBER
6/19/26	250093

DRAWING HISTORY

No.	Description	Date
4	Addendum 4	6/12/26

CHECKED BY: DGL

DRAWN BY: DAA/MRC

ROOF FRAMING DETAILS No. 2

SX4.3

Plot Stamp:
6/19/2026 3:51:47 PM

FOUNDATION PLAN - BUILDING M
SM2.1
FOR BLUEBEAM LABELING/OCR:

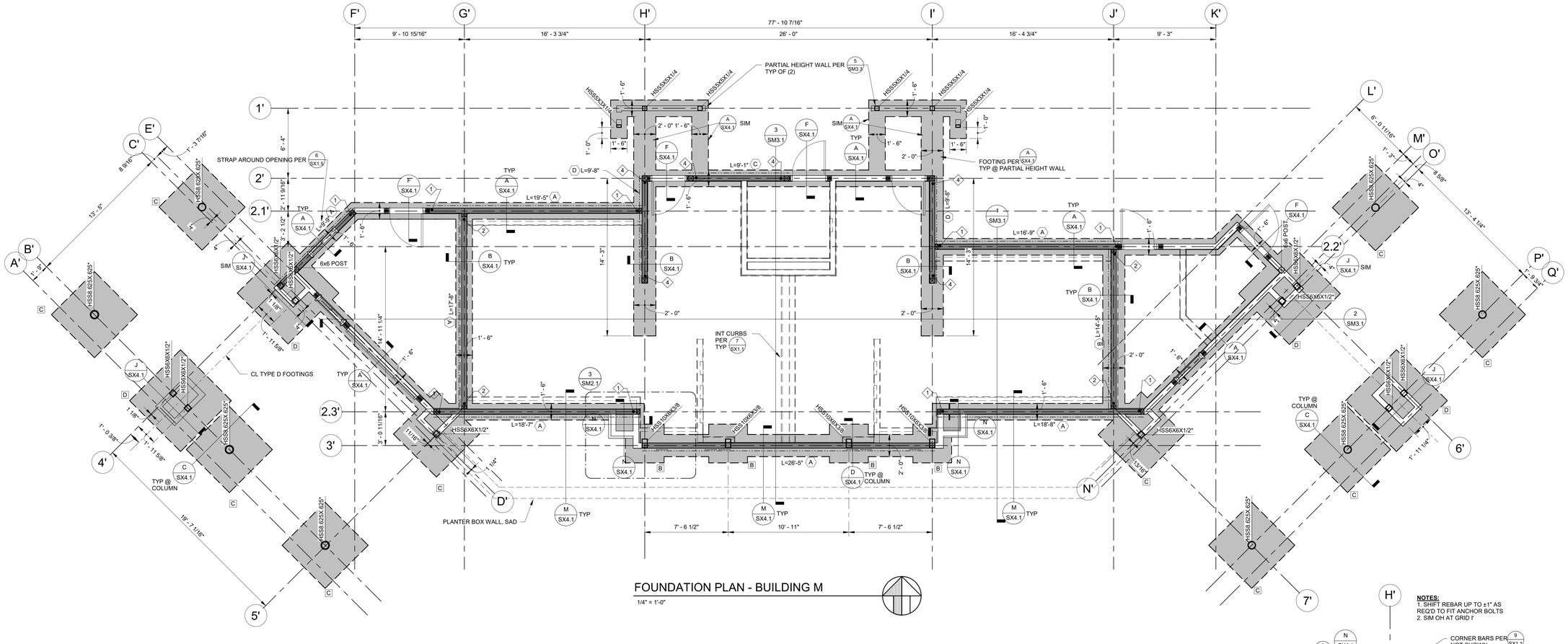

FOUNDATION PLAN - BUILDING M
1/4" = 1'-0"

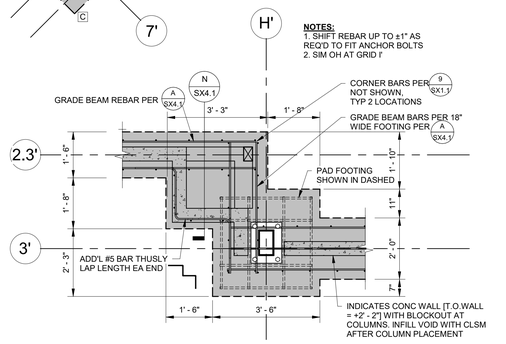

ENLARGED FOUNDATION PLAN 3 / SM2.1
1/2" = 1'-0"

NOTES:
1. SHIFT REBAR UP TO ±1" AS REQ'D TO FIT ANCHOR BOLTS
2. SIM OH AT GRID I'

FOUNDATION PLAN NOTES:

1. REFER TO GENERAL NOTES & SPECIFICATIONS ON SHEET SX0.1-SX.02.
2. SEE SHEET SX1.1-SX1.6 FOR TYPICAL FRAMING DETAILS.
3. TOP OF SLAB & GROUND FLOOR REFERENCE ELEVATION = +[0' - 0"] TYP, U.N.O.
4. FOR DETAILED SOILS INFORMATION AND COMPLETE REQUIREMENTS, REFER TO SOILS REPORT.
5. SEE (8/SX1.4) FOR BUILDING PAD PREPARATION, INCLUDING OVER EXCAVATION AND FILL REQUIREMENTS PER THE SOILS REPORT. FOR DETAILED SOILS INFORMATION AND COMPLETE REQUIREMENTS, REFER TO SOILS REPORT.
6. CONTRACTOR TO VERIFY ALL DIMENSIONS AND ELEVATIONS SHOWN WITH ARCHITECTURAL DRAWINGS AND INFORM BOTH ARCHITECT AND ENGINEER OF ANY CONFLICTING INFORMATION.
7. CONTRACTOR SHALL FIELD VERIFY ALL EXISTING SIZES, CONDITIONS, MEMBER ELEVATIONS AND DIMENSIONS BEFORE BEGINNING CONSTRUCTION AND/OR ORDERING MATERIALS. ANY CONDITIONS ENCOUNTERED IN THE FIELD THAT CONFLICT WITH THESE PLANS SHALL BE BROUGHT TO THE ATTENTION OF THE ENGINEER IMMEDIATELY.
8. THE SIZE & LOCATION OF ALL FOOTING AND SLAB PENETRATIONS SHALL BE SUBMITTED TO THE ENGINEER FOR REVIEW PRIOR TO INSTALLATION.
9. 5" THICK SLAB-ON-GRADE SECTION AS FOLLOWS: 5" THICK CONCRETE SLAB w/ #4 @ 18" O.C. EACH WAY AT 2" BELOW TOP OF SLAB. PLACE SLAB OVER 2" OF SAND, SLAB MEMBRANE AND 4" OF 3/4" CRUSHED ROCK.
10. CONTROL JOINTS ARE TO BE INSTALLED @ 12'-6" O.C. MAX AS SHOWN.
11. CONCRETE CONTRACTOR IS RESPONSIBLE FOR THE PLACEMENT OF ALL EMBEDDED ITEMS.
12. ANCHOR BOLTS AND BASE PLATES SHALL NOT BE WET SET.
13. ALL DIMENSIONS ARE TO CENTERLINE OF COLUMNS OR FACE OF CONCRETE, TYPICAL UNLESS NOTED OTHERWISE.
14. STUDWALL CONSTRUCTION SHALL BE:
    3x6 STUDS @ 16" O.C., U.N.O.
    2x6 STUDS @ 16" O.C. ALONG GRID 2', 3, & AT INTERIOR STUDS
    2x6 PT SILL PLATE, U.N.O. 5/8" Ø.
    AB @ 48" O.C. W/ 8" MIN EMBED BELOW TOP OF SLAB.
    THE OUTSIDE FACE OF EXTERIOR WALLS SHALL BE SHEATHED W/ 1/2" CDX PLYWOOD. EDGE NAILING SHALL BE 8d @ 6" O.C. AND FIELD NAILING SHALL BE 8d @ 12" O.C., U.N.O.
15. SEE ARCHITECTURAL DRAWINGS FOR CURB LOCATIONS.
16. SEE ARCHITECTURAL DRAWINGS FOR LOCATION OF ESCALATOR AND ELEVATOR PITS.
17. ALL 4x & 6x POSTS SHALL BE SUPPORTED WITH SIMPSON ABU POST BASES W/ 5/8" Ø. x 8" EMBED ANCHOR BOLTS, U.N.O.
18. SEE SHEET SM3.1-SM3.3 FOR BUILDING SECTIONS & ELEVATIONS

19. (1/A101) INDICATES DETAIL/SECTION VIEW WITH VIEW DIRECTION ARROW, DETAIL NUMBER AND SHEET REFERENCE.
20. (1) INDICATES GRID
21. INDICATES FOOTING
22. -[0'-2"] INDICATES DEPRESSED SLAB ELEVATION
23. (A) L = X' - X" INDICATES SHEARWALL CONSTRUCTION WITH NAILING TAG.
24. INDICATES SHEAR WALL LENGTH. SEE SCHEDULE. (1/SX1.5)
25. (1) INDICATES HOLDOWN TAG & END POST (MIN 4x). SEE SCHEDULE (2/SX1.5)
26. INDICATES STUDWALL. SEE PLAN NOTES & (1/SX1.2)
27. [A] INDICATES FOUNDATION TAG. SEE SCHEDULE.
28. -[1' - 0"] INDICATES TOP OF FOOTING EELVATION BELOW TOP OF SLAB. TOP OF FOOTING SHALL BE 1' - 0" BELOW TOP OF SLAB, UNO
29. INDICATES 2x OPENING FRAMING PER (1/SX1.2) MIN (2) 2x TRIMMER AND (1) 2x CRIPPLE, VARIES BASED ON OPENING LENGTH
30. * INDICATES LFRS COLUMN, SEE BASE PLATE DETAIL (6/SX1.6)

FOOTING SCHEDULE				
TYPE	SIZE	REINFORCING		REMARKS
		LONGITUDINAL	TRANSVERSE	
A	3'-0" SQ x 1'-6"	3 - #6	3 - #6	1,2
B	3'-6" SQ x 1'-6"	4 - #6	4 - #6	1,2
C	5'-6" SQ x 2'-0"	6 - #6	6 - #6	1,2
D	6'-6" SQ x 2'-0"	8 - #6	8 - #6	1,2

NOTES:
1. RUN CONTINUOUS STEEL THROUGH FOOTING.
2. REINFORCING INDICATES TOP AND BOTTOM MAT.

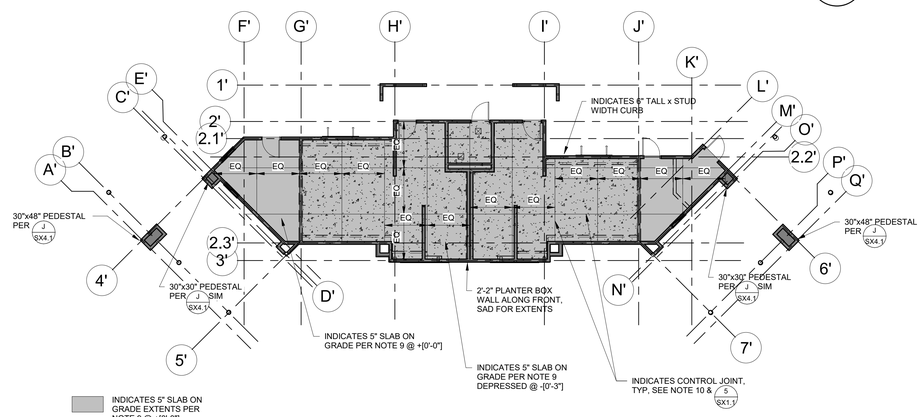

CURB PLAN - BUILDING M
3/32" = 1'-0"

PBK
www.pbk.com
TX FIRM: BR 1608
HOUSTON, TX
713-865-6008

PARLIER HS STADIUM REPLACEMENT
603 3RD STREET
PARLIER, CA. 93648

DSA BACKCHECK 2

PARLIER UNIFIED SCHOOL DISTRICT

CORNERSTONE structural engineering group
9 River Park Place East, Suite 330
Fresno, California 93720
559.320.3200
fax 559.320.3201

REGISTERED PROFESSIONAL ENGINEER — JUSTIN G. LEGGETT — No. S6623 — EXP. 3/31/27 — STRUCTURAL — STATE OF CALIFORNIA

CLIENT	
PARLIER UNIFIED SCHOOL DISTRICT	
DATE	PROJECT NUMBER
6/19/26	250093

DRAWING HISTORY

No.	Description	Date
4	Addendum 4	6/12/26

CHECKED BY: DGL
DRAWN BY: DAA/MRC

FOUNDATION PLAN - BUILDING M

SM2.1

Plot Stamp:
6/19/2026 3:51:48 PM

CEILING FRAMING PLAN - BUILDING M
SM2.2
FOR BLUEBEAM LABELING/OCR:

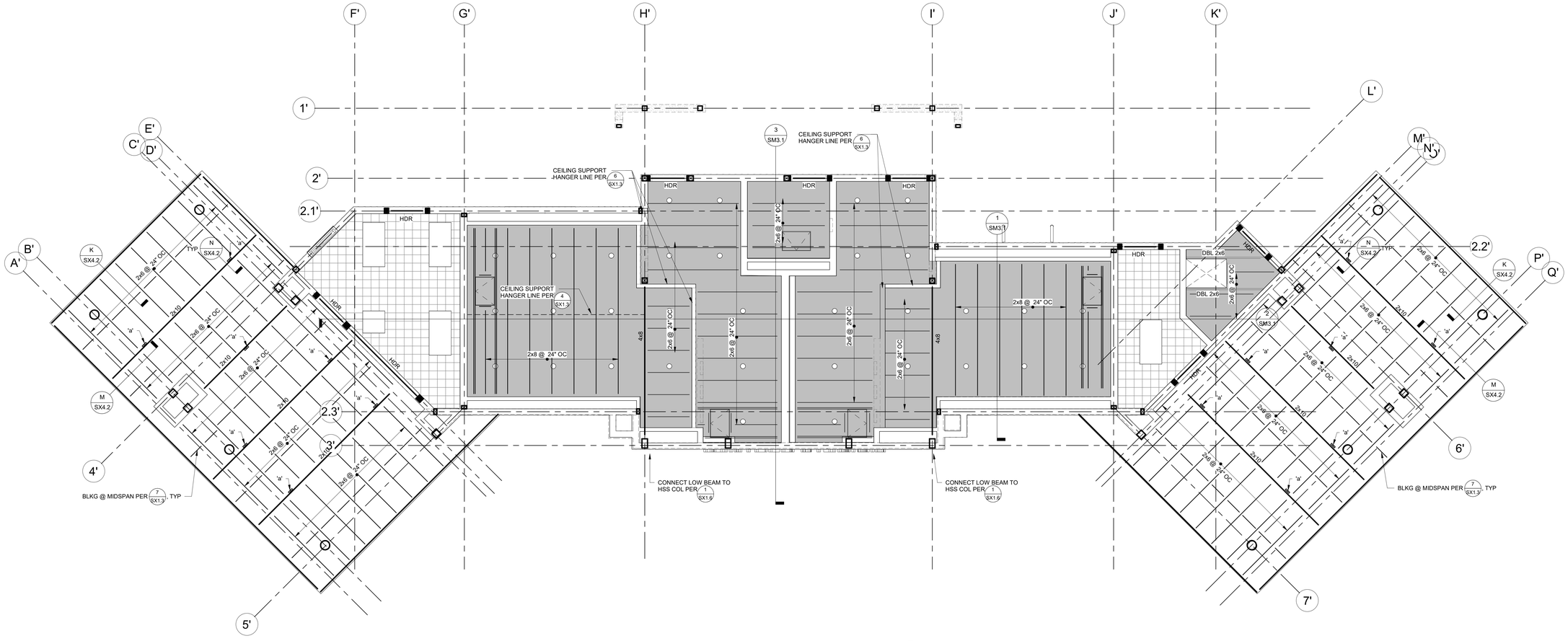

CEILING FRAMING PLAN - BUILDING M
1/4" = 1'-0"

CEILING FRAMING NOTES:

1. REFER TO GENERAL NOTES & SPECIFICATIONS ON SHEET SX0.1-SX.02.
2. SEE SHEET SX1.1-SX1.6 FOR TYPICAL FRAMING DETAILS.
3. AT CEILING FRAMING, PROVIDE GYPSUM BOARD (THICKNESS PER ARCH, 1/2" MIN, 1 1/4" MAX), W/ #6 SELF DRILLING DRYWALL SCREWS @ 7" OC EDGE FASTENING & 12" OC FIELD FASTENING IN COMPLIANCE WITH CBC SECTION 2508.6
4. AT NON SHEARWALLS SUPPORTING CEILING FRAMING, PROVIDE GYPSUM BOARD FULL HEIGHT (THICKNESS PER ARCH, 1/2" MIN), W/ #6 SELF DRILLING DRYWALL SCREWS @ 7" OC EDGE FASTENING & 12" OC FIELD FASTENING
5. CONTRACTOR TO VERIFY ALL DIMENSIONS AND ELEVATIONS SHOWN WITH ARCHITECTURAL DRAWINGS AND INFORM BOTH ARCHITECT AND ENGINEER OF ANY CONFLICTING INFORMATION.
6. NO PENETRATIONS FOR PIPING, CONDUIT, OR DUCTWORK SHALL BE MADE THRU THE JOISTS UNLESS APPROVED IN WRITING BY THE ENGINEER.
7. ALL DIMENSIONS ARE TO FACE OF WALL, UNLESS NOTED OTHERWISE.
8. FOR ALL CEILING OPENINGS REFER TO 8/SX1.2, TYP
9. INDICATES CEILING JOISTS, SEE 7/SX1.3
10. 'a' INDICATES 2x6 CEILING JOIST HANGER, SEE M/SX4.2 & N/SX4.2 FOR MORE INFORMATION.
11. 'HDR' INDICATES WOOD HEADER PER SCHEDULE. 1/SX1.2

PBK
www.pbk.com
TX FIRM: BR 1608
HOUSTON, TX
713-965-0608

PARLIER HS STADIUM REPLACEMENT

603 3RD STREET
PARLIER, CA, 93648

DSA BACKCHECK 2

PARLIER UNIFIED SCHOOL DISTRICT

CORNERSTONE structural engineering group
9 River Park Place East, Suite 330
Fresno, California 93720
559.320.3200
fax 559.320.3201

REGISTERED PROFESSIONAL ENGINEER
DUSTIN G. LEE
No. S6623
EXP. 3/31/27
STRUCTURAL
STATE OF CALIFORNIA

CLIENT
PARLIER UNIFIED SCHOOL DISTRICT

DATE	PROJECT NUMBER
6/19/26	250093

DRAWING HISTORY

No.	Description	Date

CHECKED BY: DGL
DRAWN BY: DAA/MRC

CEILING FRAMING PLAN - BUILDING M

SM2.2

Plot Stamp:
6/19/2026 3:51:49 PM

ROOF FRAMING PLAN - BUILDING M
SM2.3

FOR BLUEBEAM LABELING/OCR:

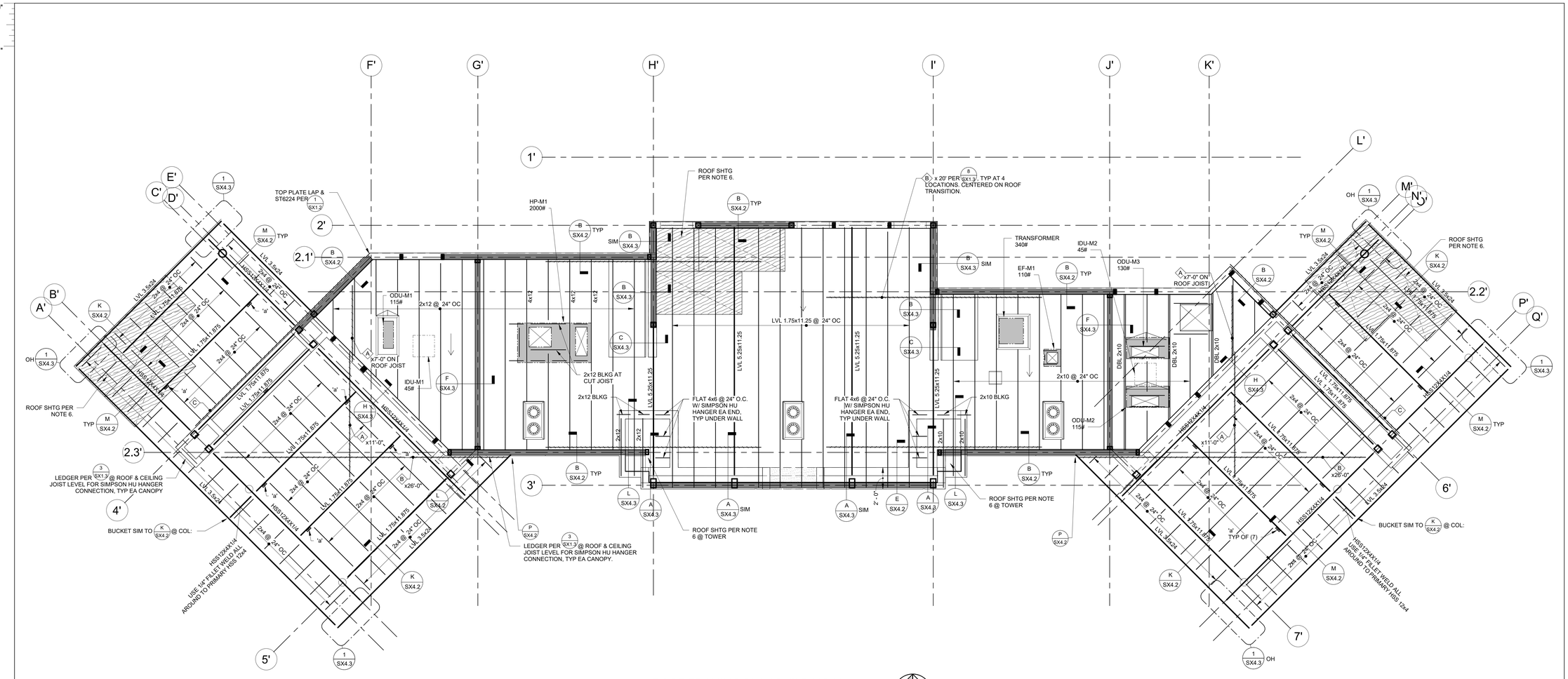

ROOF FRAMING PLAN BUILDING M

1/4" = 1'-0"

ROOF FRAMING NOTES:

1. REFER TO GENERAL NOTES & SPECIFICATIONS ON SHEET SX0.1-SX.02.
2. SEE SHEET SX1.1-SX1.6 FOR TYPICAL FRAMING DETAILS.
3. SEE ARCHITECTURAL DRAWINGS FOR ROOF ELEVATIONS.
4. CONTRACTOR TO VERIFY ALL DIMENSIONS AND ELEVATIONS SHOWN WITH ARCHITECTURAL DRAWINGS AND INFORM BOTH ARCHITECT AND ENGINEER OF ANY CONFLICTING INFORMATION.
5. CONTRACTOR SHALL FIELD VERIFY ALL EXISTING SIZES, CONDITIONS, MEMBER ELEVATIONS AND DIMENSIONS BEFORE BEGINNING CONSTRUCTION AND/OR ORDERING MATERIALS. ANY CONDITIONS ENCOUNTERED IN THE FIELD THAT CONFLICT WITH THESE PLANS SHALL BE BROUGHT TO THE ATTENTION OF THE ENGINEER IMMEDIATELY.
6. ROOF SHEATHING SHALL CONSIST OF 1/2" CDX PLYWOOD W/ 10d @ 6" O.C. AT BOUNDARIES AND EDGES, 10d @ 12" O.C. FIELD NAILING. ALL PLYWOOD EDGES SHALL BE FULLY BLOCKED TYPICAL, U.N.O.
7. ROOF DIAPHRAGM FASTENING SHALL BE APPROVED BY BUILDING DEPARTMENT PRIOR TO COVERING.
8. INSTALL EXTRA 2x6 AT RIDGE LOCATIONS WHERE NECESSARY.
9. SEE ARCHITECTURAL DRAWINGS FOR SIZE & LOCATION OF ROOF OPENINGS.
10. VERIFY SIZE AND LOCATION OF ALL OPENINGS WITH ARCHITECTURAL DRAWINGS AND MECHANICAL DRAWINGS. NOTIFY STRUCTURAL ENGINEER IMMEDIATELY OF ANY DISCREPANCIES, TYPICAL U.N.O.
11. FIRE SPRINKLER PIPING SHALL NOT BE SUPPORTED BY MEMBERS 6" OR LESS IN DEPTH. DESIGN OF THE ATTACHMENT TO THE SUPPORTING MEMBERS SHALL BE THE RESPONSIBILITY OF THE SPRINKLER INSTALLER.
12. THE SIZE, LOCATIONS AND ORIENTATIONS OF ALL MECHANICAL UNITS, CURBS, SLEEPERS AND OPENINGS SHALL BE VERIFIED WITH THE UNIT SUPPLIERS. ANY CONFLICTS SHALL BE BROUGHT TO THE ATTENTION OF THE ENGINEER IMMMEDIATELY.
13. NOT USED.
14. ALL RAFTER TO BEAM/GIRDER CONNECTIONS SHALL BE W/ SIMPSON HU HANGERS, U.N.O.
15. CONTRACTOR TO USE SKEWED HANGERS IN LIEU OF HANGER SHOWN AS REQUIRED.
16. ALL 4x BEAM TO POST CONNECTIONS SHALL BE WITH EPC OR PC POST CAPS, U.N.O.
17. ALL 6x BEAM OR GL BEAM TO POST CONNECTIONS SHALL BE WITH ECC OR CC COLUMN CAPS, U.N.O. SEE 10 SX1.2
18. SEE SHEET SM3.1-SM3.3 FOR BUILDING SECTIONS & ELEVATIONS

19. 1 A101 — INDICATES DETAIL/SECTION VIEW WITH VIEW DIRECTION ARROW, DETAIL NUMBER AND SHEET REFERENCE.
20. 1 — INDICATES GRID
21. INDICATES WALL BELOW
22. INDICATES SHEARWALL BELOW
23. A / B / C — INDICATES SIMPSON STRAP. SEE PLAN & 8 SX1.3 INDICATES SIMPSON CMSTC16
24. INDICATES SIMPSON CS16
25. INDICATES SIMPSON CS16 x 22'- 0". ATTACH TO FACE OF LVL WITH RIPPED 3x BLKG TO BE FLUSH WITH GRID 4' WALL. ATTACH TO BLKG IN GRID 4' SHEARWALL PER 5 SX1.3
26. INDICATES FRAMED DECK OPENING.
27. INDICATES DIRECTION OF ROOF SLOPE. S.A.D.
28. INDICATES NEW MECHANICAL UNITS ABOVE ROOF. S.M.D. PROVIDE 3x6 BLKG AROUND PERIMETER OF UNIT AND OPENINGS FOR CURB ATTACHMENT WITH SIMPSON U HANGER EA END. SEE 2 SX1.3
600# INDICATES MAXIMUM UNIT WEIGHT.
29. INDICATES NEW MECHANICAL UNITS BELOW ROOF. S.M.D. PROVIDE 4x BLKG AS REQ'D FOR HANGER ROD/SWAY BRACE ATTACHMENT WITH SIMPSON U HANGER EA END. SEE 11 X8.02
600# INDICATES MAXIMUM UNIT WEIGHT.
30. 'a' — INDICATES 2x6 CEILING JOIST HANGER, SEE M SX4.2 & N SX4.2 FOR MORE INFORMATION.

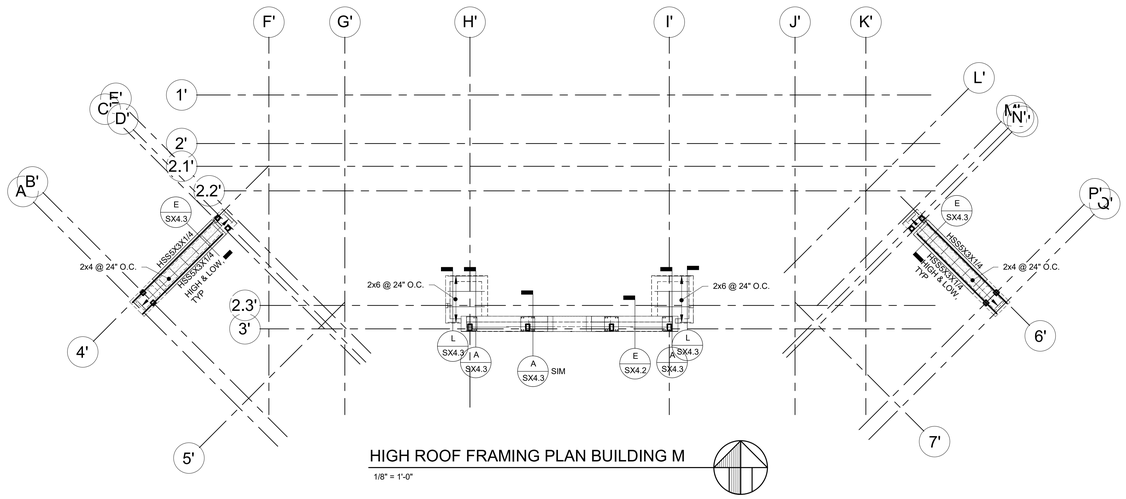

HIGH ROOF FRAMING PLAN BUILDING M

1/8" = 1'-0"

PARLIER HS STADIUM REPLACEMENT

603 3RD STREET
PARLIER, CA. 93648

DSA BACKCHECK 2

PBK
www.pbk.com
TX FIRM: BR 1608
HOUSTON, TX
713-665-0008

PARLIER UNIFIED SCHOOL DISTRICT

CORNERSTONE structural engineering group
9 River Park Place East, Suite 330
Fresno, California 93720
559.320.3200
fax 559.320.3201

REGISTERED PROFESSIONAL ENGINEER — JUSTIN G. LEE — No. 56823 EXP. 3/31/27 — STRUCTURAL — STATE OF CALIFORNIA

CLIENT	
PARLIER UNIFIED SCHOOL DISTRICT	
DATE 6/19/26	PROJECT NUMBER 250093

DRAWING HISTORY

No.	Description	Date
4	Addendum 4	6/12/26

CHECKED BY: DGL
DRAWN BY: DAA/MRC

ROOF FRAMING PLAN - BUILDING M

SM2.3

Plot Stamp:
6/19/2026 3:51:50 PM

BUILDING SECTIONS No.1 - BUILDING M
SM3.1
FOR BLUEBEAM LABELING/OCR:

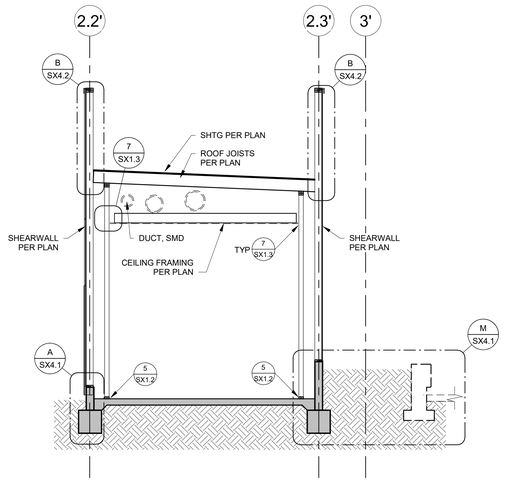

SECTION 1 SM3.1
1/4" = 1'-0"

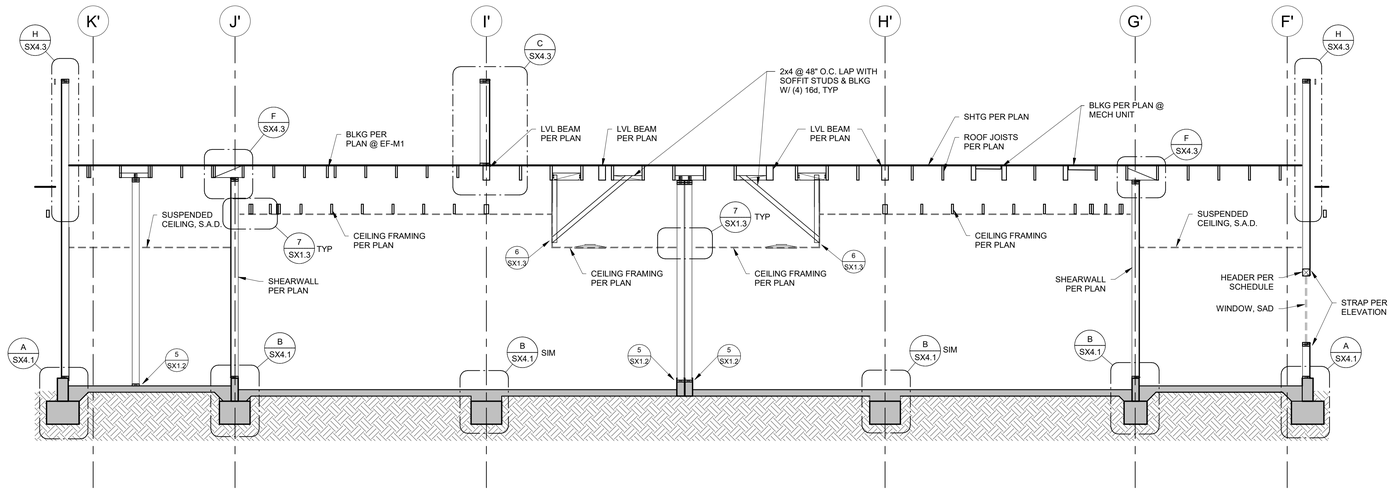

SECTION 2 SM3.1
1/4" = 1'-0"

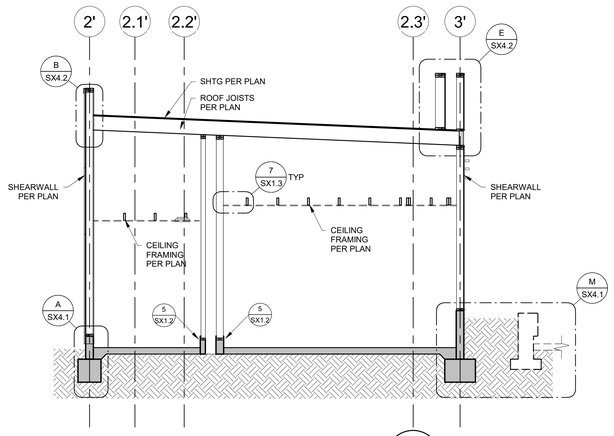

SECTION 3 SM3.1
1/4" = 1'-0"

PBK
HOUSTON, TX 713-965-0608
TX FIRM: BR 1608
www.pbk.com

PARLIER HS STADIUM REPLACEMENT

603 3RD STREET
PARLIER, CA 93648

DSA BACKCHECK 2

PARLIER UNIFIED SCHOOL DISTRICT

CORNERSTONE structural engineering group
9 River Park Place East, Suite 330
Fresno, California 93720
559.320.3200
fax 559.320.3201

REGISTERED PROFESSIONAL ENGINEER
DUSTIN G. LEE
No. 56623
EXP. 3/31/27
STRUCTURAL
STATE OF CALIFORNIA

CLIENT
PARLIER UNIFIED SCHOOL DISTRICT

DATE	PROJECT NUMBER
6/19/26	250093

DRAWING HISTORY

No.	Description	Date

CHECKED BY: DGL
DRAWN BY: DAA/MRC

BUILDING SECTIONS
No.1 - BUILDING M

SM3.1

Plot Stamp:
6/19/2026 3:51:50 PM

BUILDING ELEVATIONS No.1 - BUILDING M
SM3.2
FOR BLUEBEAM LABELING/OCR:

0"
1"

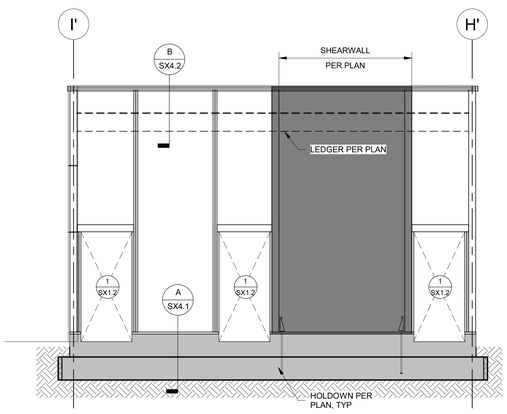

GRIDLINE 2' — 1/4" = 1'-0" — 1 SM3.2

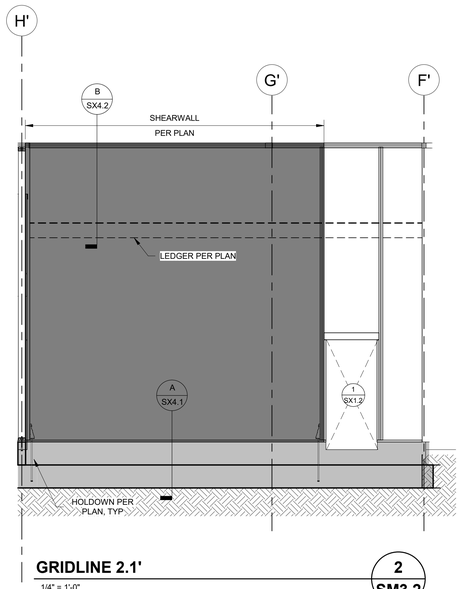

GRIDLINE 2.1' — 1/4" = 1'-0" — 2 SM3.2

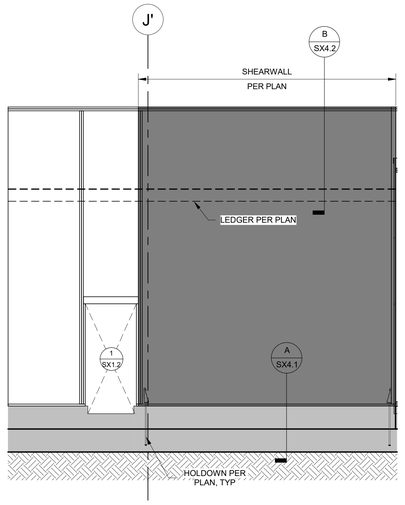

GRIDLINE 2.2' — 1/4" = 1'-0" — 3 SM3.2

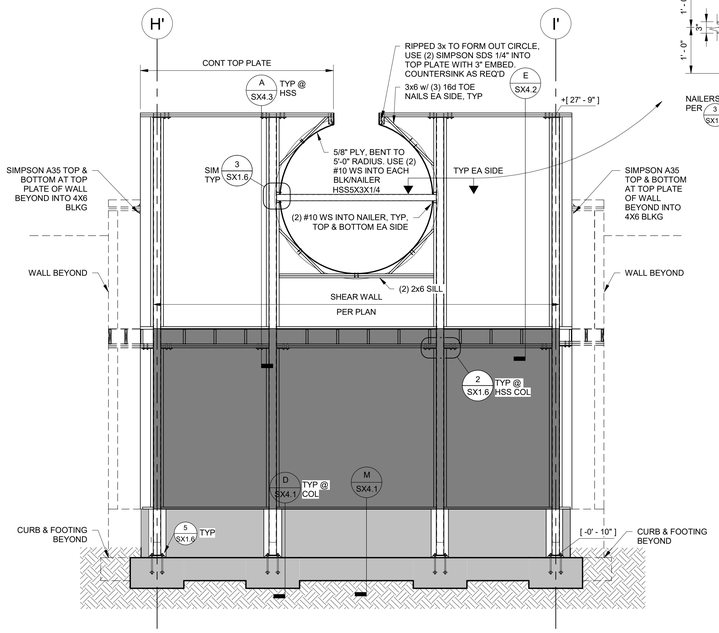

GRIDLINE 3' — 1/4" = 1'-0" — 4 SM3.2

GRIDLINE 2.3' — 1/4" = 1'-0" — 5 SM3.2

PARLIER HS STADIUM REPLACEMENT
603 3RD STREET
PARLIER, CA. 93648

DSA BACKCHECK 2

PBK
HOUSTON, TX
713-665-0008
TX FIRM BR 1608
www.pbk.com

PARLIER UNIFIED SCHOOL DISTRICT

CORNERSTONE structural engineering group
9 River Park Place East, Suite 330
Fresno, California 93720
559.320.3200
fax 559.320.3201

REGISTERED PROFESSIONAL ENGINEER
JUSTIN G. LEE
No. 56623
EXP. 3/31/27
STRUCTURAL
STATE OF CALIFORNIA

CLIENT	
PARLIER UNIFIED SCHOOL DISTRICT	
DATE	PROJECT NUMBER
6/19/26	250093

DRAWING HISTORY

No.	Description	Date

CHECKED BY: DGL
DRAWN BY: DAA/MRC

BUILDING ELEVATIONS No.1 - BUILDING M

SM3.2

Plot Stamp:
6/19/2026 3:51:52 PM

BUILDING ELEVATIONS No.2 - BUILDING M
SM3.3
FOR BLUEBEAM LABELING/OCR:

0"
1"

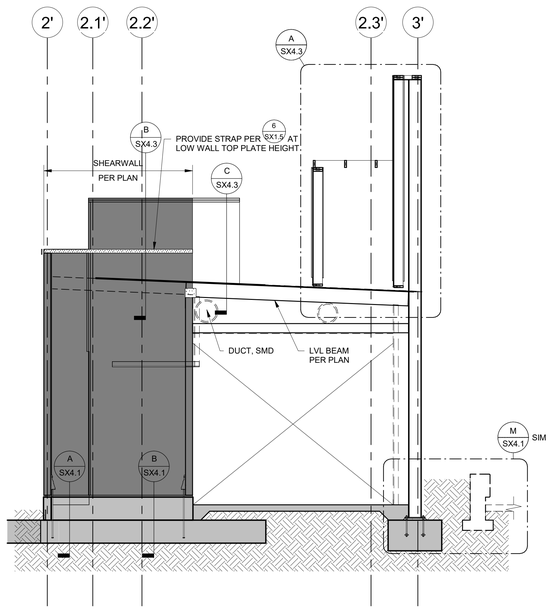

GRIDLINE H' — 1/4" = 1'-0" — 1 SM3.3

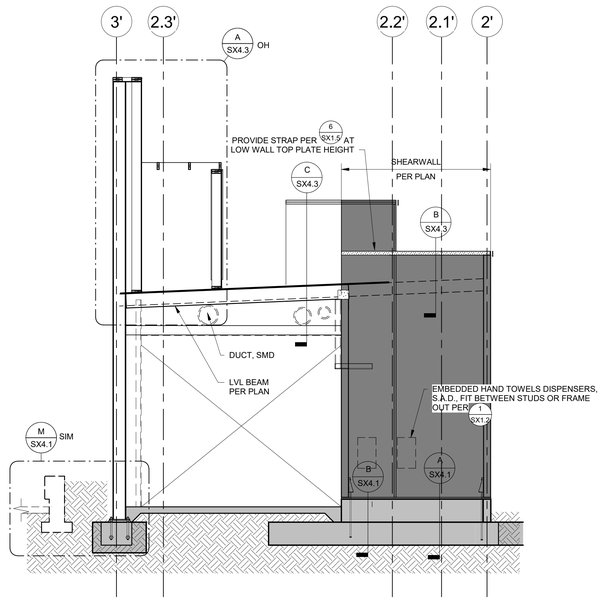

GRIDLINE I' — 1/4" = 1'-0" — 2 SM3.3

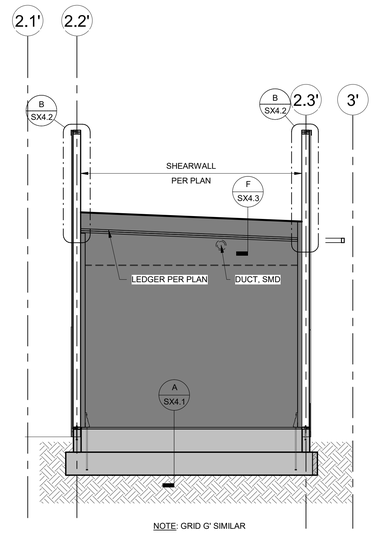

NOTE: GRID G' SIMILAR

GRIDLINE J' & GRIDLINE G' SIM — 1/4" = 1'-0" — 3 SM3.3

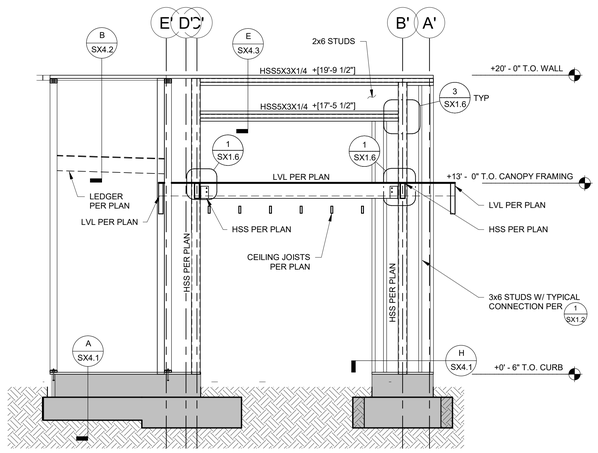

GRIDLINE 4' & GRIDLINE 6' SIM — 1/4" = 1'-0" — 4 SM3.3

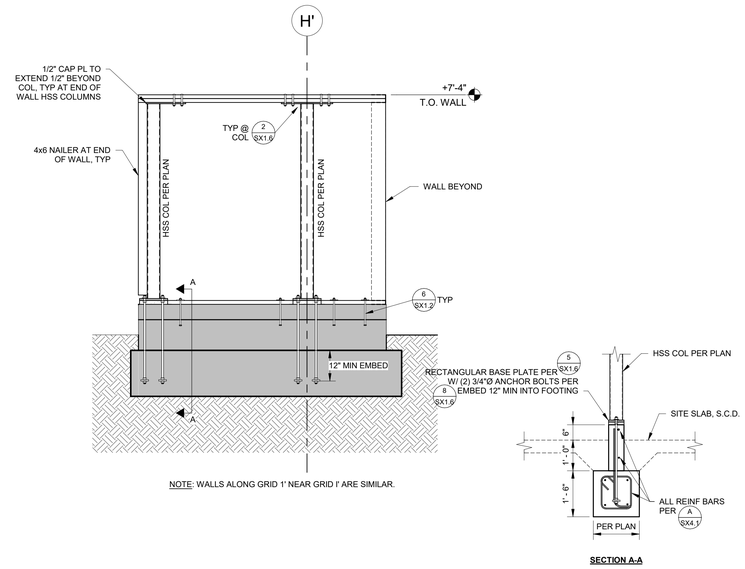

NOTE: WALLS ALONG GRID 1' NEAR GRID I' ARE SIMILAR.

SECTION A-A

GRIDLINE 1' — 1/2" = 1'-0" — 5 SM3.3

PARLIER HS STADIUM REPLACEMENT
603 3RD STREET
PARLIER, CA. 93648

DSA BACKCHECK 2

PBK
www.pbk.com
TX FIRM: BR 1608
HOUSTON, TX
713-985-0008

PARLIER UNIFIED SCHOOL DISTRICT

CORNERSTONE structural engineering group
9 River Park Place East, Suite 330
Fresno, California 93720
559.320.3200
fax 559.320.3201

REGISTERED PROFESSIONAL ENGINEER — JUSTIN G. LEGGE — No. 56823 EXP. 3/31/27 — STRUCTURAL — STATE OF CALIFORNIA

CLIENT	
PARLIER UNIFIED SCHOOL DISTRICT	
DATE	PROJECT NUMBER
6/19/26	250093

DRAWING HISTORY

No.	Description	Date

CHECKED BY: DGL
DRAWN BY: DAA/MRC

BUILDING ELEVATIONS No.2 - BUILDING M

SM3.3

Plot Stamp:
6/19/2026 3:51:53 PM

FOUNDATION PLAN - BUILDING N
SN2.1
FOR BLUEBEAM LABELING/OOR:

0"
1"

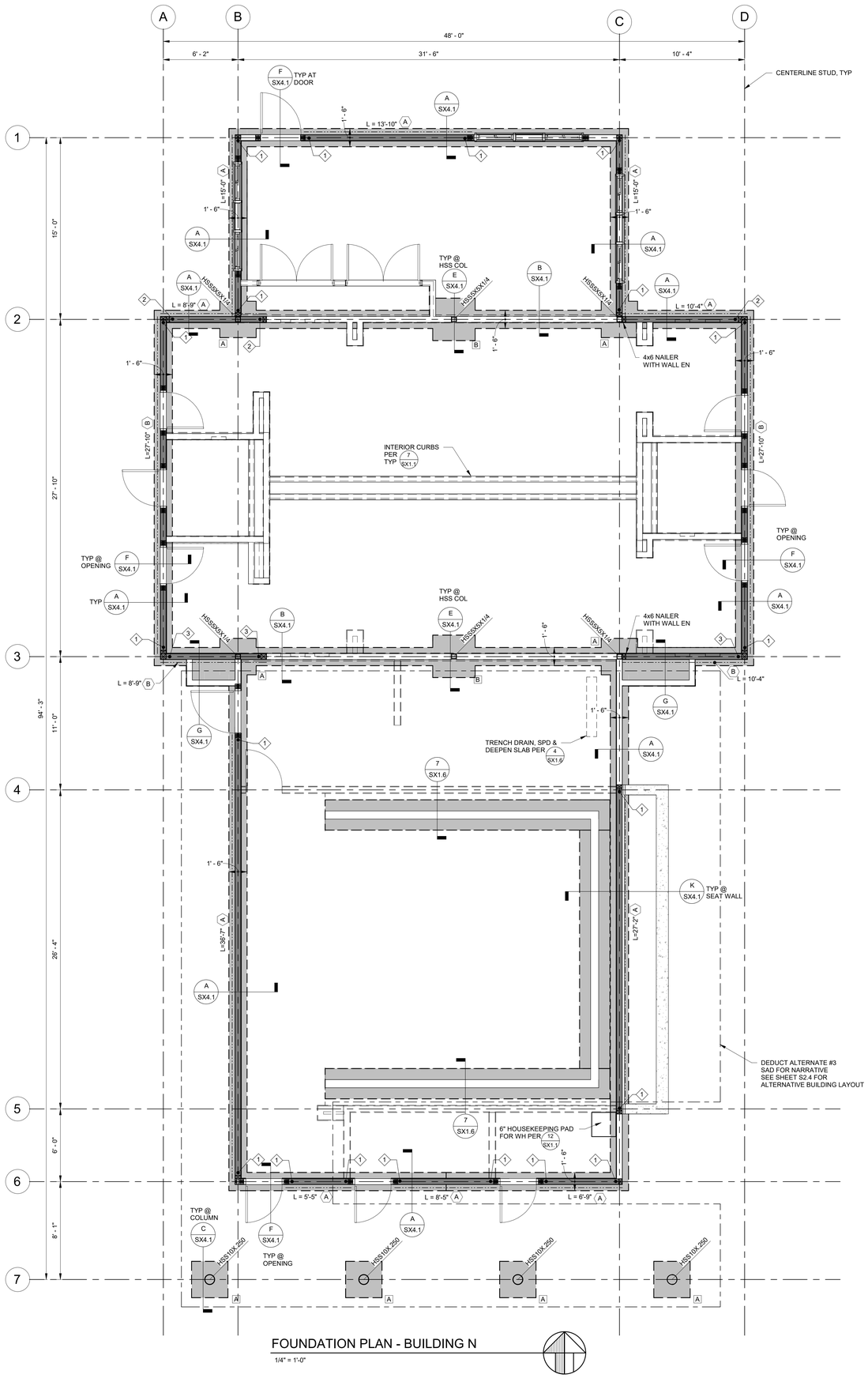

FOUNDATION PLAN - BUILDING N
1/4" = 1'-0"

FOUNDATION PLAN NOTES:

1. REFER TO GENERAL NOTES & SPECIFICATIONS ON SHEET SX0.1-SX.02.
2. SEE SHEET SX1.1-SX1.6 FOR TYPICAL FRAMING DETAILS.
3. TOP OF SLAB & GROUND FLOOR REFERENCE ELEVATION = +[0' - 0"] TYP, U.N.O.
4. FOR DETAILED SOILS INFORMATION AND COMPLETE REQUIREMENTS, REFER TO SOILS REPORT.
5. SEE 8/SX1.6 FOR BUILDING PAD PREPARATION, INCLUDING OVER EXCAVATION AND FILL REQUIREMENTS PER THE SOILS REPORT. FOR DETAILED SOILS INFORMATION AND COMPLETE REQUIREMENTS, REFER TO SOILS REPORT.
6. CONTRACTOR TO VERIFY ALL DIMENSIONS AND ELEVATIONS SHOWN WITH ARCHITECTURAL DRAWINGS AND INFORM BOTH ARCHITECT AND ENGINEER OF ANY CONFLICTING INFORMATION.
7. CONTRACTOR SHALL FIELD VERIFY ALL EXISTING SIZES, CONDITIONS, MEMBER ELEVATIONS AND DIMENSIONS BEFORE BEGINNING CONSTRUCTION AND/OR ORDERING MATERIALS. ANY CONDITIONS ENCOUNTERED IN THE FIELD THAT CONFLICT WITH THESE PLANS SHALL BE BROUGHT TO THE ATTENTION OF THE ENGINEER IMMEDIATELY.
8. THE SIZE & LOCATION OF ALL FOOTING AND SLAB PENETRATIONS SHALL BE SUBMITTED TO THE ENGINEER FOR REVIEW PRIOR TO INSTALLATION.
9. 5" THICK SLAB-ON-GRADE SECTION AS FOLLOWS: 5" THICK CONCRETE SLAB w/ #4 @ 18" O.C. EACH WAY AT 2" BELOW TOP OF SLAB. PLACE SLAB OVER 2" OF SAND, SLAB MEMBRANE AND 4" OF 3/4" CRUSHED ROCK.
10. CONTROL JOINTS ARE TO BE INSTALLED @ 12'-6" O.C. MAX AS SHOWN.
11. CONCRETE CONTRACTOR IS RESPONSIBLE FOR THE PLACEMENT OF ALL EMBEDDED ITEMS.
12. ANCHOR BOLTS AND BASE PLATES SHALL NOT BE WET SET.
13. ALL DIMENSIONS ARE TO CENTERLINE OF COLUMNS OR FACE OF CONCRETE, TYPICAL UNLESS NOTED OTHERWISE.
14. STUDWALL CONSTRUCTION SHALL BE:
    2x6 STUDS @ 16" O.C., U.N.O.
    3x6 STUDS @ 16" O.C. ALONG GRID A, D, 2 & 3.
    2x6 PT SILL PLATE, U.N.O. 5/8" Ø.
    AB @ 48" O.C. W/ 8" MIN EMBED BELOW TOP OF SLAB.
    THE OUTSIDE FACE OF EXTERIOR WALLS SHALL BE SHEATHED W/ 1/2" CDX PLYWOOD. EDGE NAILING SHALL BE 8d @ 6" O.C. AND FIELD NAILING SHALL BE 8d @ 12" O.C., U.N.O.
15. SEE CURB PLAN BELOW FOR CURB LOCATIONS.

16. 1/A101 — INDICATES DETAIL/SECTION VIEW WITH VIEW DIRECTION ARROW, DETAIL NUMBER AND SHEET REFERENCE.
17. 1 — INDICATES GRID
18. INDICATES FOOTING
19. -[0'-2"] — INDICATES DEPRESSED SLAB ELEVATION
20. A, L = X' - X" — INDICATES SHEARWALL CONSTRUCTION WITH NAILING TAG.
21. INDICATES SHEAR WALL LENGTH. SEE SCHEDULE. 1/SX1.5
22. 1 — INDICATES HOLDOWN TAG & END POST (MIN 4x). SEE SCHEDULE 2/SX1.5
23. INDICATES STUDWALL. SEE PLAN NOTES & 1/SX1.2
24. A — INDICATES FOUNDATION TAG. SEE SCHEDULE.
25. -[1' - 0"] — INDICATES TOP OF FOOTING EELVATION BELOW TOP OF SLAB. TOP OF FOOTING SHALL BE 1' - 0" BELOW TOP OF SLAB, UNO
26. 1/SX1.2 — INDICATES 2x OPENING FRAMING PER MIN (2) 2x TRIMMER AND (1) 2x CRIPPLE, VARIES BASED ON OPENING LENGTH

FOOTING SCHEDULE				
TYPE	SIZE	REINFORCING		REMARKS
		LONGITUDINAL	TRANSVERSE	
A	3'-0" SQ x 1'-6"	3 - #6	3 - #6	1,2
B	3'-6" SQ x 1'-6"	4 - #6	4 - #6	1,2
C	5'-6" SQ x 2'-0"	6 - #6	6 - #6	1,2
D	6'-6" SQ x 2'-0"	8 - #6	8 - #6	1,2

NOTES:
1. RUN CONTINUOUS STEEL THROUGH FOOTING.
2. REINFORCING INDICATES TOP AND BOTTOM MAT.

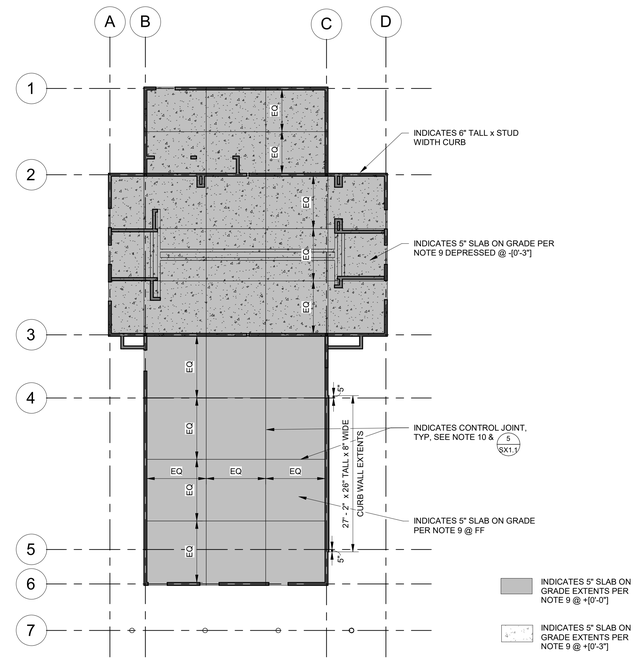

SLAB & CURB PLAN - BUILDING N
3/32" = 1'-0"

PBK
www.pbk.com
TX FIRM: BR 1608
HOUSTON, TX
713-665-0008

PARLIER HS STADIUM REPLACEMENT
603 3RD STREET
PARLIER, CA. 93648

DSA BACKCHECK 2

PARLIER UNIFIED SCHOOL DISTRICT

CORNERSTONE structural engineering group
9 River Park Place East, Suite 330
Fresno, California 93720
559.320.3200
fax 559.320.3201

REGISTERED PROFESSIONAL ENGINEER — JUSTIN G. LEGGE — No. S6623 EXP. 3/31/27 — STRUCTURAL — STATE OF CALIFORNIA

CLIENT	
PARLIER UNIFIED SCHOOL DISTRICT	
DATE	PROJECT NUMBER
6/19/26	250093

DRAWING HISTORY

No.	Description	Date

CHECKED BY: DGL
DRAWN BY: DAA/MRC

FOUNDATION PLAN - BUILDING N

SN2.1

Plot Stamp:
6/19/2026 3:51:54 PM

CEILING FRAMING PLAN - BUILDING N
SN2.2
FOR BLUEBEAM LABELING/OCR:

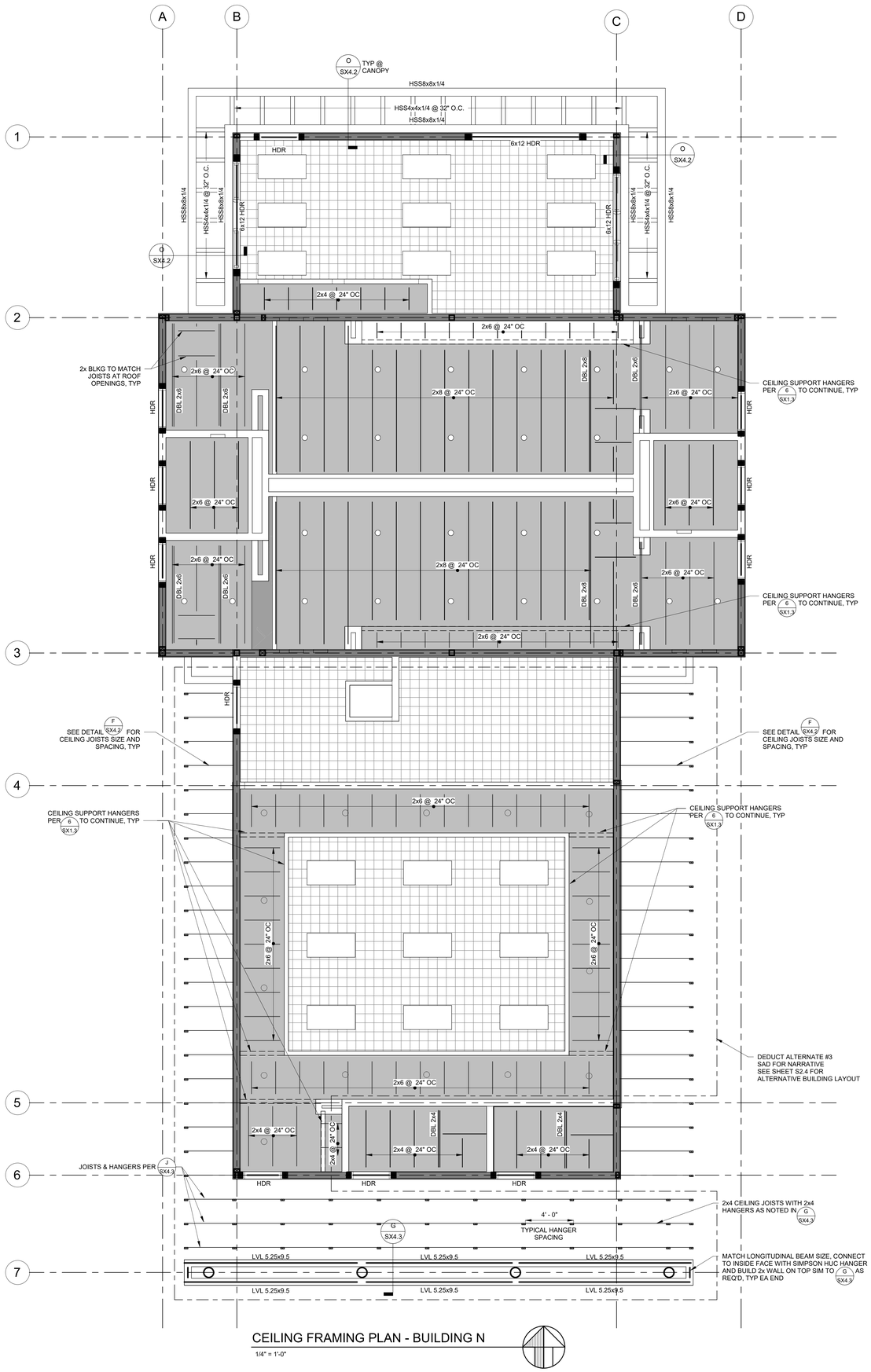

CEILING FRAMING PLAN - BUILDING N

1/4" = 1'-0"

CEILING FRAMING NOTES:

1. REFER TO GENERAL NOTES & SPECIFICATIONS ON SHEET SX0.1-SX.02.
2. SEE SHEET SX1.1-SX1.6 FOR TYPICAL FRAMING DETAILS.
3. AT CEILING FRAMING, PROVIDE GYPSUM BOARD (THICKNESS PER ARCH, 1/2" MIN, 1 1/4" MAX), W/ #6 SELF DRILLING DRYWALL SCREWS @ 7" OC EDGE FASTENING & 12" OC FIELD FASTENING IN COMPLIANCE WITH CBC SECTION 2508.6
4. AT NON SHEARWALLS SUPPORTING CEILING FRAMING, PROVIDE GYPSUM BOARD FULL HEIGHT (THICKNESS PER ARCH, 1/2" MIN), W/ #6 SELF DRILLING DRYWALL SCREWS @ 7" OC EDGE FASTENING & 12" OC FIELD FASTENING
5. CONTRACTOR TO VERIFY ALL DIMENSIONS AND ELEVATIONS SHOWN WITH ARCHITECTURAL DRAWINGS AND INFORM BOTH ARCHITECT AND ENGINEER OF ANY CONFLICTING INFORMATION.
6. NO PENETRATIONS FOR PIPING, CONDUIT, OR DUCTWORK SHALL BE MADE THRU THE JOISTS UNLESS APPROVED IN WRITING BY THE ENGINEER.
7. ALL DIMENSIONS ARE TO FACE OF WALL, UNLESS NOTED OTHERWISE.
8. INDICATES CEILING JOISTS, SEE 7 SX1.3
9. 'HDR' INDICATES WOOD HEADER PER SCHEDULE 1 SX1.2

PBK

www.pbk.com

TX FIRM: BR 1608

HOUSTON, TX
713-965-0008

PARLIER HS STADIUM REPLACEMENT

603 3RD STREET
PARLIER, CA. 93648

DSA BACKCHECK 2

PARLIER UNIFIED SCHOOL DISTRICT

CORNERSTONE structural engineering group

9 River Park Place East, Suite 330
Fresno, California 93720
559.320.3200
fax 559.320.3201

REGISTERED PROFESSIONAL ENGINEER
JUSTIN G. LEPORE
No. S6623
EXP. 3/31/27
STRUCTURAL
STATE OF CALIFORNIA

CLIENT	
PARLIER UNIFIED SCHOOL DISTRICT	
DATE: 6/19/26	PROJECT NUMBER: 250093

DRAWING HISTORY

No.	Description	Date

CHECKED BY: DGL

DRAWN BY: DAA/MRC

CEILING FRAMING PLAN - BUILDING N

SN2.2

Plot Stamp:
6/19/2026 3:51:54 PM

ROOF FRAMING PLAN - BUILDING N
SN2.3

FOR BLUEBEAM LABELING/OCR:

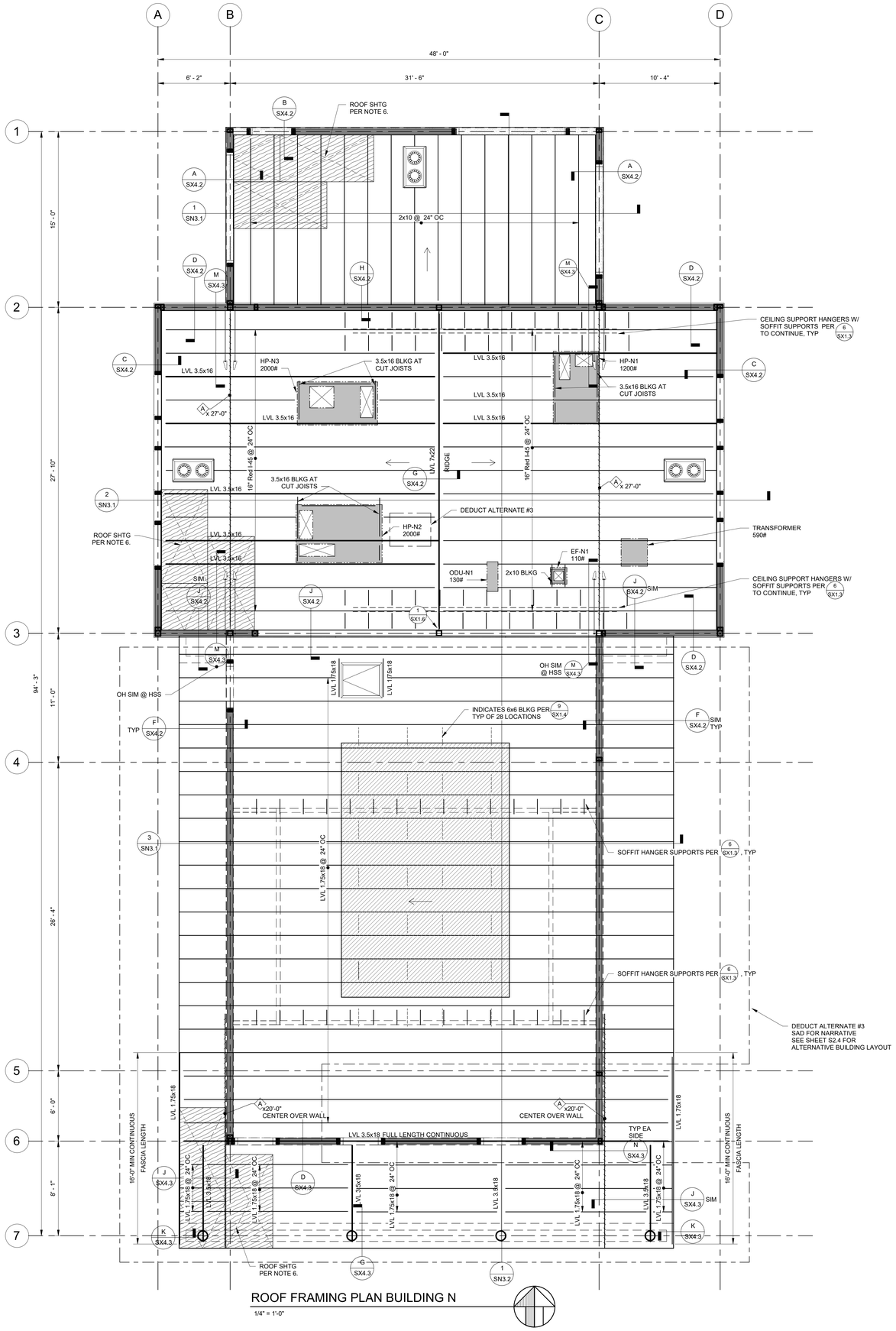

ROOF FRAMING PLAN BUILDING N

1/4" = 1'-0"

ROOF FRAMING NOTES:

1. REFER TO GENERAL NOTES & SPECIFICATIONS ON SHEET SX0.1-SX.02.
2. SEE SHEET SX1.1-SX1.6 FOR TYPICAL FRAMING DETAILS.
3. SEE ARCHITECTURAL DRAWINGS FOR ROOF ELEVATIONS.
4. CONTRACTOR TO VERIFY ALL DIMENSIONS AND ELEVATIONS SHOWN WITH ARCHITECTURAL DRAWINGS AND INFORM BOTH ARCHITECT AND ENGINEER OF ANY CONFLICTING INFORMATION.
5. CONTRACTOR SHALL FIELD VERIFY ALL EXISTING SIZES, CONDITIONS, MEMBER ELEVATIONS AND DIMENSIONS BEFORE BEGINNING CONSTRUCTION AND/OR ORDERING MATERIALS. ANY CONDITIONS ENCOUNTERED IN THE FIELD THAT CONFLICT WITH THESE PLANS SHALL BE BROUGHT TO THE ATTENTION OF THE ENGINEER IMMEDIATELY.
6. ROOF SHEATHING SHALL CONSIST OF 1/2" CDX PLYWOOD W/ 10d @ 6" O.C. AT BOUNDARIES AND EDGES, 10d @ 12" O.C. FIELD NAILING. ALL PLYWOOD EDGES SHALL BE FULLY BLOCKED TYPICAL, U.N.O.
7. FLOOR/ROOF DIAPHRAGM FASTENING SHALL BE APPROVED BY BUILDING DEPARTMENT PRIOR TO COVERING.
8. INSTALL EXTRA 2x6 AT RIDGE LOCATIONS WHERE NECESSARY.
9. SEE ARCHITECTURAL DRAWINGS FOR SIZE & LOCATION OF ROOF OPENINGS.
10. VERIFY SIZE AND LOCATION OF ALL OPENINGS WITH ARCHITECTURAL DRAWINGS AND MECHANICAL DRAWINGS. NOTIFY STRUCTURAL ENGINEER IMMEDIATELY OF ANY DISCREPANCIES, TYPICAL U.N.O.
11. FIRE SPRINKLER PIPING SHALL NOT BE SUPPORTED BY MEMBERS 6" OR LESS IN DEPTH. DESIGN OF THE ATTACHMENT TO THE SUPPORTING MEMBERS SHALL BE THE RESPONSIBILITY OF THE SPRINKLER INSTALLER.
12. THE SIZE, LOCATIONS AND ORIENTATIONS OF ALL MECHANICAL UNITS, CURBS, SLEEPERS AND OPENINGS SHALL BE VERIFIED WITH THE UNIT SUPPLIERS. ANY CONFLICTS SHALL BE BROUGHT TO THE ATTENTION OF THE ENGINEER IMMMEDIATELY.
13. ROOF JOISTS SHALL BE BRIDGED EVERY 10 FEET BY SOLID 2X BLOCKING OR BY 1x3 WOOD CROSS BRIDGING OR NAILED STEEL CROSS BRIDGING OF EQUAL STRENGTH.
14. ALL RAFTER TO BEAM/GIRDER CONNECTIONS SHALL BE W/ SIMPSON HU HANGERS, U.N.O.
15. CONTRACTOR TO USE SKEWED HANGERS IN LIEU OF HANGER SHOWN AS REQUIRED.
16. ALL 4x BEAM TO POST CONNECTIONS SHALL BE WITH EPC OR PC POST CAPS, U.N.O.
17. ALL 6x BEAM OR GL BEAM TO POST CONNECTIONS SHALL BE WITH ECC OR CC COLUMN CAPS, U.N.O. SEE 10 SX1.2
18. SEE SHEET SN3.1-SN3.4 FOR BUILDING SECTIONS & ELEVATIONS

19. 1 A101 — INDICATES DETAIL/SECTION VIEW WITH VIEW DIRECTION ARROW, DETAIL NUMBER AND SHEET REFERENCE.
20. 1 — INDICATES GRID
21. INDICATES WALL BELOW
22. INDICATES SHEARWALL BELOW
23. INDICATES SIMPSON STRAP. SEE PLAN.
24. INDICATES FRAMED DECK OPENING.
25. INDICATES DIRECTION OF ROOF SLOPE. S.A.D.
26. INDICATES ALLOWED SOLAR AREA. S.E.D. & ANCHOR PER 9 SX1.4
27. INDICATES NEW MECHANICAL UNITS ABOVE ROOF. S.M.D. PROVIDE 4x6 BLKG AROUND PERIMETER OF UNIT AND OPENINGS FOR CURB ATTACHMENT WITH SIMPSON U HANGER EA END. SEE 2 SX1.3
    600# INDICATES MAXIMUM UNIT WEIGHT.
28. A x LENGTH — INDICATES SIMPSON CMSTC16 & LENGTH ON ROOF INTO BLKG PER EXCEPT AS NOTED IN PROJECT SPECIFIC DETAIL AT COLUMN 8 SX1.3

PBK

www.pbk.com

TX FIRM REGISTRATION # 608

HOUSTON, TX
713-665-0008

PARLIER HS STADIUM REPLACEMENT

603 3RD STREET
PARLIER, CA. 93648

DSA BACKCHECK 2

PARLIER UNIFIED SCHOOL DISTRICT

CORNERSTONE structural engineering group
9 River Park Place East, Suite 330
Fresno, California 93720
559.320.3200
fax 559.320.3201

REGISTERED PROFESSIONAL ENGINEER
DAVID A. ARMSTRONG
No. 39623
EXP. 3/31/27
STRUCTURAL
STATE OF CALIFORNIA

CLIENT
PARLIER UNIFIED SCHOOL DISTRICT

DATE	PROJECT NUMBER
6/19/26	250093

DRAWING HISTORY

No.	Description	Date
4	Addendum 4	6/12/26

CHECKED BY: DGL

DRAWN BY: DAA/MRC

ROOF FRAMING PLAN - BUILDING N

SN2.3

Plot Stamp:
6/19/2026 3:51:55 PM

DEDUCT ALTERNATE #3
SN2.4
FOR BLUEBEAM LABELING/OCR:

0"
1"

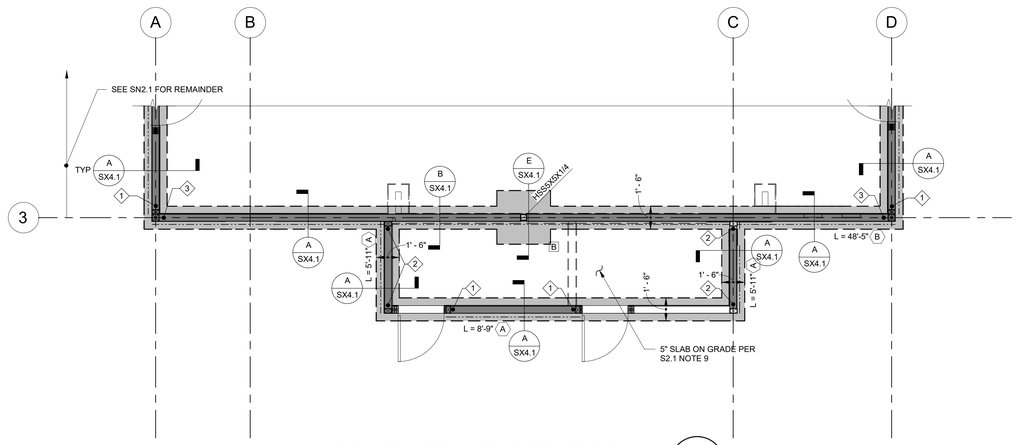

DEDUCT ALTERNATE #3 FOUNDATION PLAN 1 / SN2.4

1/4" = 1'-0"

DEDUCT ALTERNATE #3 FOUNDATION PLAN NOTES:
1. SEE NOTES ON SN2.1

DEDUCT ALTERNATE #3 CEILING FRAMING PLAN NOTES:
1. SEE NOTES ON SN2.2

DEDUCT ALTERNATE #3 ROOF FRAMING PLAN NOTES:
1. SEE NOTES ON SN2.3

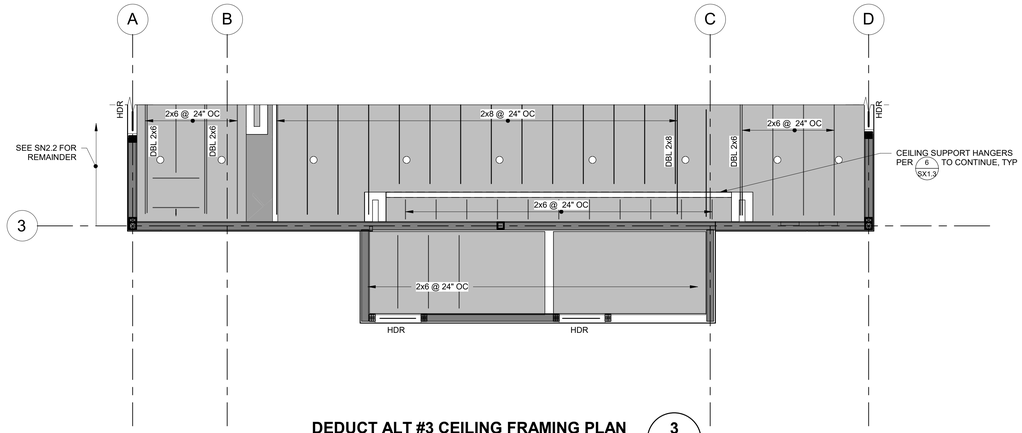

DEDUCT ALT #3 CEILING FRAMING PLAN 3 / SN2.4

1/4" = 1'-0"

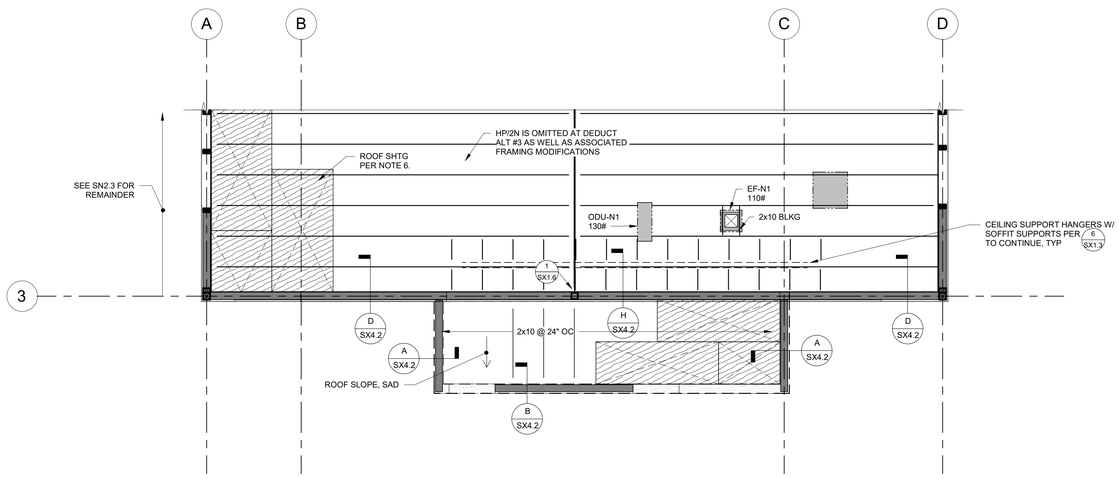

DEDUCT ALT #3 ROOF FRAMING PLAN 4 / SN2.4

1/4" = 1'-0"

Plot Stamp:
6/19/2026 3:51:55 PM

PBK
HOUSTON, TX
713-665-0008
TX FIRM: BR 1608
www.pbk.com

PARLIER HS STADIUM REPLACEMENT

603 3RD STREET
PARLIER, CA. 93648

DSA BACKCHECK 2

PARLIER UNIFIED SCHOOL DISTRICT

CORNERSTONE structural engineering group
9 River Park Place East, Suite 330
Fresno, California 93720
559.320.3200
fax 559.320.3201

REGISTERED PROFESSIONAL ENGINEER
JUSTIN G. LEGGE
No. S6623
EXP. 3/31/27
STRUCTURAL
STATE OF CALIFORNIA

CLIENT
PARLIER UNIFIED SCHOOL DISTRICT

DATE	PROJECT NUMBER
6/19/26	250093

DRAWING HISTORY

No.	Description	Date

CHECKED BY: Checker
DRAWN BY: Author

DEDUCT ALTERNATE #3

SN2.4

BUILDING SECTIONS No. 1 - BUILDING N
SN3.1
FOR BLUEBEAM LABELING/OCR:

0"
1"

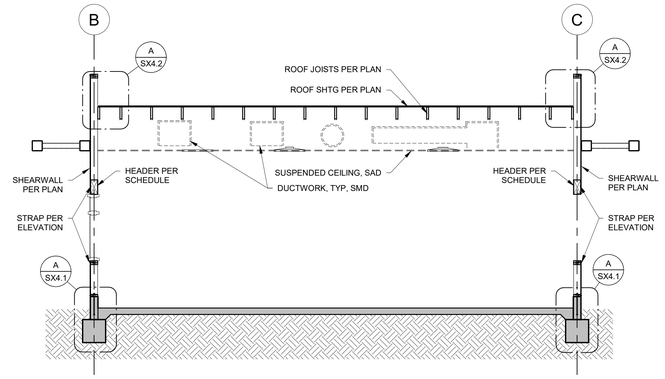

SECTION 1 SN3.1
1/4" = 1'-0"

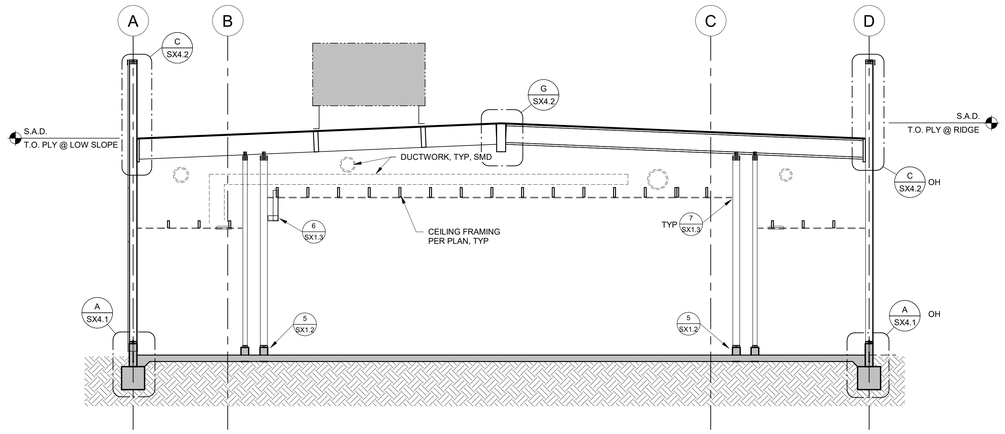

SECTION 2 SN3.1
1/4" = 1'-0"

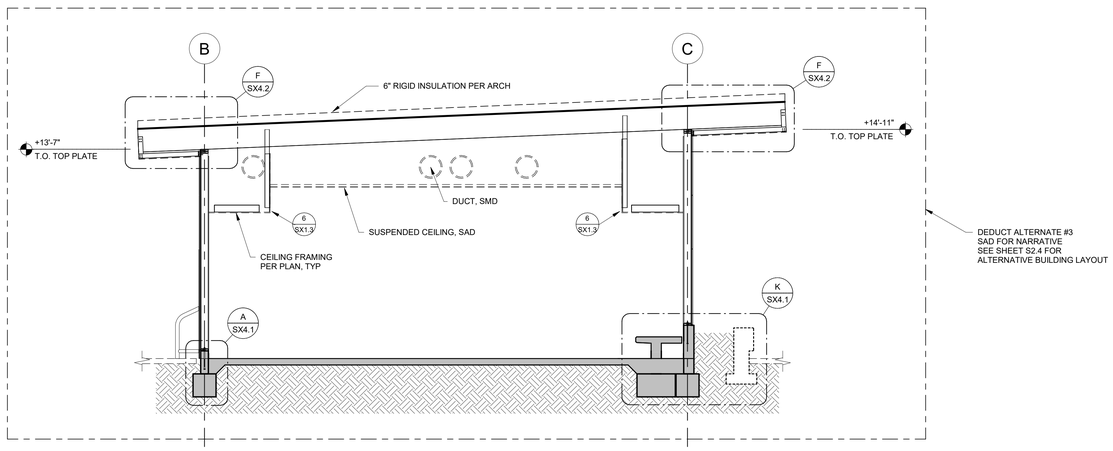

SECTION 3 SN3.1
1/4" = 1'-0"

PBK
HOUSTON, TX
713-865-6008
TX FIRM REGISTRATION # 1608
www.pbk.com

PARLIER HS STADIUM REPLACEMENT

603 3RD STREET
PARLIER, CA. 93648

DSA BACKCHECK 2

PARLIER UNIFIED SCHOOL DISTRICT

CORNERSTONE structural engineering group
9 River Park Place East, Suite 330
Fresno, California 93720
559.320.3200
fax 559.320.3201

REGISTERED PROFESSIONAL ENGINEER
JUSTIN G. [illegible]
No. 56623
EXP. 3/31/27
STRUCTURAL
STATE OF CALIFORNIA

CLIENT	
PARLIER UNIFIED SCHOOL DISTRICT	
DATE	PROJECT NUMBER
6/19/26	250093

DRAWING HISTORY

No.	Description	Date

CHECKED BY: DGL
DRAWN BY: DAA/MRC

BUILDING SECTIONS
No. 1 - BUILDING N

SN3.1

Plot Stamp:
6/19/2026 3:51:56 PM

0"
1"

BUILDING SECTIONS No. 2 - BUILDING N
SN3.2
FOR BLUEBEAM LABELING/OCR:

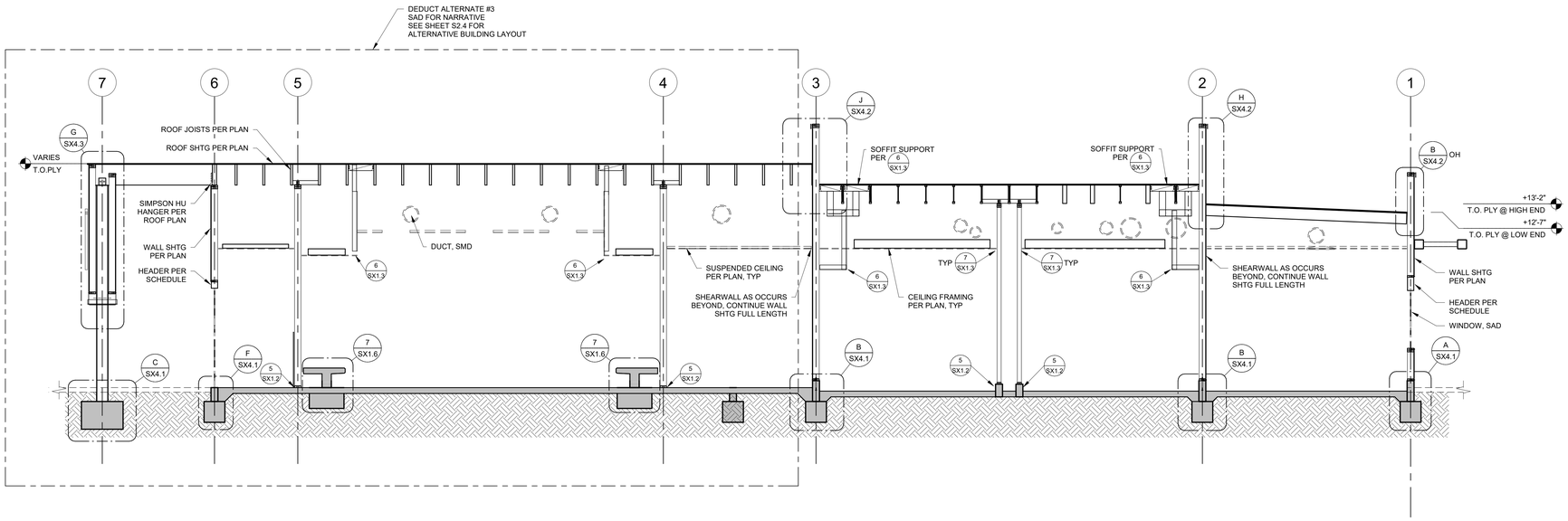

SECTION 1 / SN3.2
1/4" = 1'-0"

PBK
HOUSTON, TX
713-365-0008
TX FIRM REGISTRATION # 1608
www.pbk.com

PARLIER HS STADIUM REPLACEMENT

603 3RD STREET
PARLIER, CA. 93648

DSA BACKCHECK 2

PARLIER UNIFIED SCHOOL DISTRICT

CORNERSTONE
structural engineering group
9 River Park Place East, Suite 330
Fresno, California 93720
559.320.3200
fax 559.320.3201

REGISTERED PROFESSIONAL ENGINEER
DUSTIN G. LEGGE
No. S6623
EXP. 3/31/27
STRUCTURAL
STATE OF CALIFORNIA

CLIENT
PARLIER UNIFIED SCHOOL DISTRICT

DATE	PROJECT NUMBER
6/19/26	250093

DRAWING HISTORY

No.	Description	Date

CHECKED BY: DGL
DRAWN BY: DAA/MRC

BUILDING SECTIONS
No. 2 - BUILDING N

SN3.2

Plot Stamp:
6/19/2026 3:51:56 PM

BUILDING ELEVATIONS No.1 - BUILDING N
SN3.3
FOR BLUEBEAM LABELING/OCR:

0"
1"

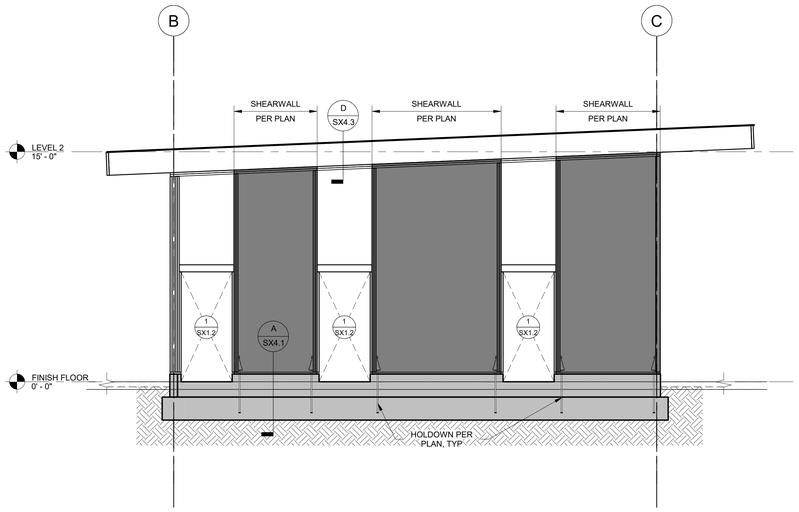

GRID 6 WALL ELEVATION — 1/4" = 1'-0" — 1 / SN3.3

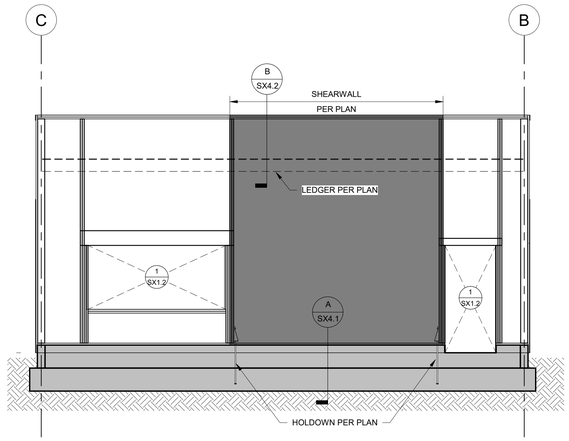

GRID 1 ELEVATION — 1/4" = 1'-0" — 3 / SN3.3

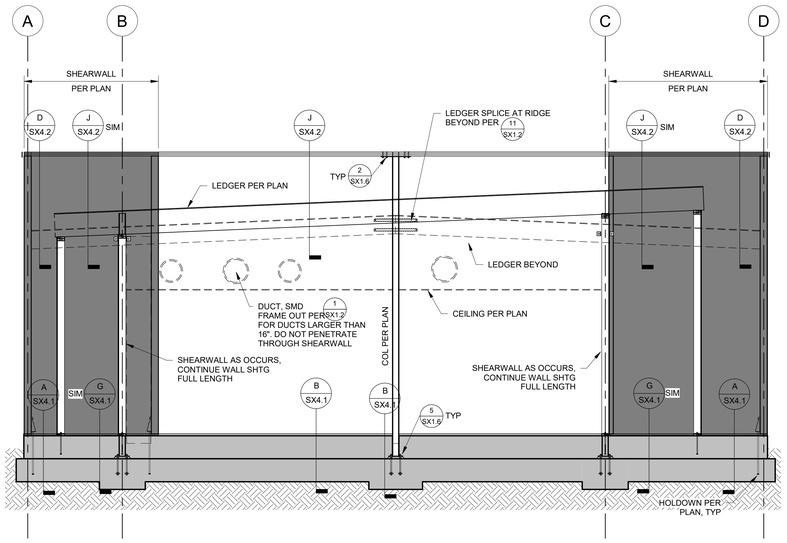

NOTE: GRID 2 SIMILAR

GRID 3 WALL ELEVATION — 1/4" = 1'-0" — 2 / SN3.3

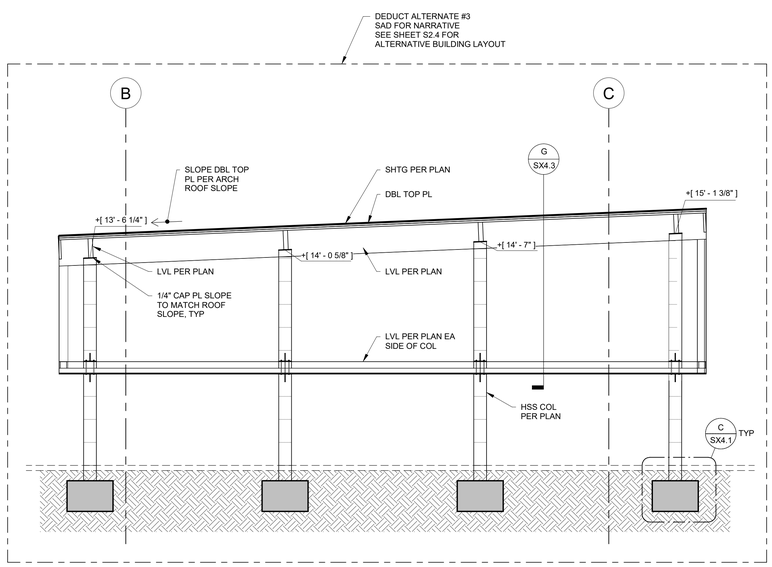

GRID 7 WALL ELEVATION — 1/4" = 1'-0" — 4 / SN3.3

PBK
www.pbk.com
TX FIRM REGISTRATION # 1608
HOUSTON, TX
713-865-6006

PARLIER HS STADIUM REPLACEMENT

603 3RD STREET
PARLIER, CA. 93648

DSA BACKCHECK 2

PARLIER UNIFIED SCHOOL DISTRICT

CORNERSTONE
structural
engineering
group
9 River Park Place East, Suite 330
Fresno, California 93720
559.320.3200
fax 559.320.3201

REGISTERED PROFESSIONAL ENGINEER
JUSTIN G. LEE
No. S6623
EXP. 3/31/27
STRUCTURAL
STATE OF CALIFORNIA

CLIENT	
PARLIER UNIFIED SCHOOL DISTRICT	
DATE	PROJECT NUMBER
6/19/26	250093

DRAWING HISTORY

No.	Description	Date

CHECKED BY: DGL
DRAWN BY: DAA/MRC

BUILDING ELEVATIONS No.1 - BUILDING N

SN3.3

Plot Stamp:
6/19/2026 3:51:57 PM

BUILDING ELEVATIONS No.2 - BUILDING N
SN3.4
FOR BLUEBEAM LABELING/OCR:

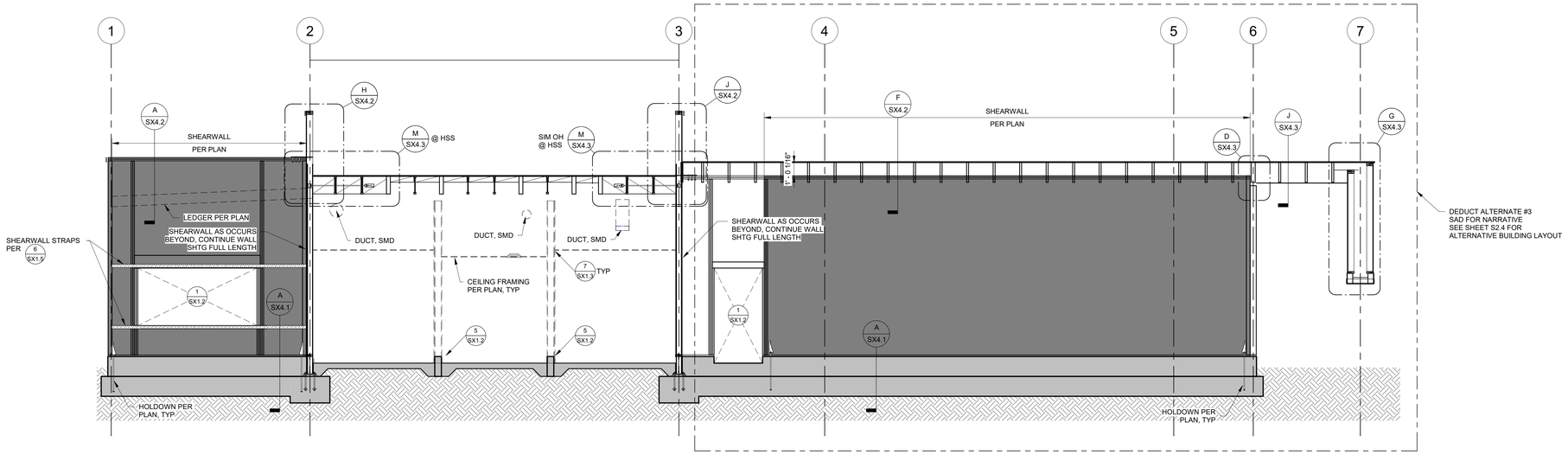

NOTE: GRID C SIMILAR

GRID B ELEVATION

1/4" = 1'-0"

1 SN3.4

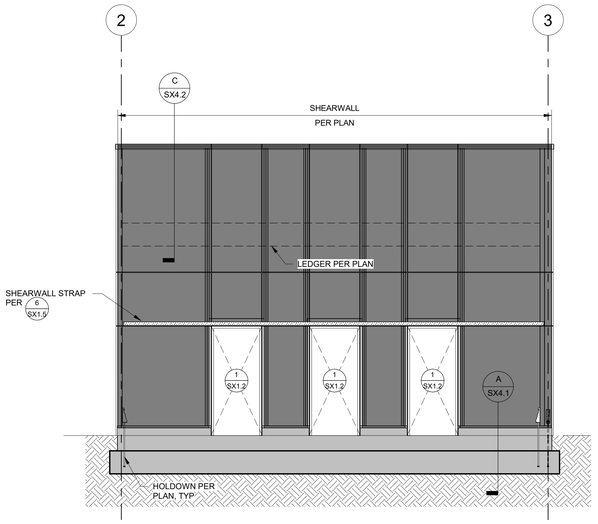

GRID A WALL ELEVATION

1/4" = 1'-0"

2 SN3.4

NOTE: GRID D SIMILAR

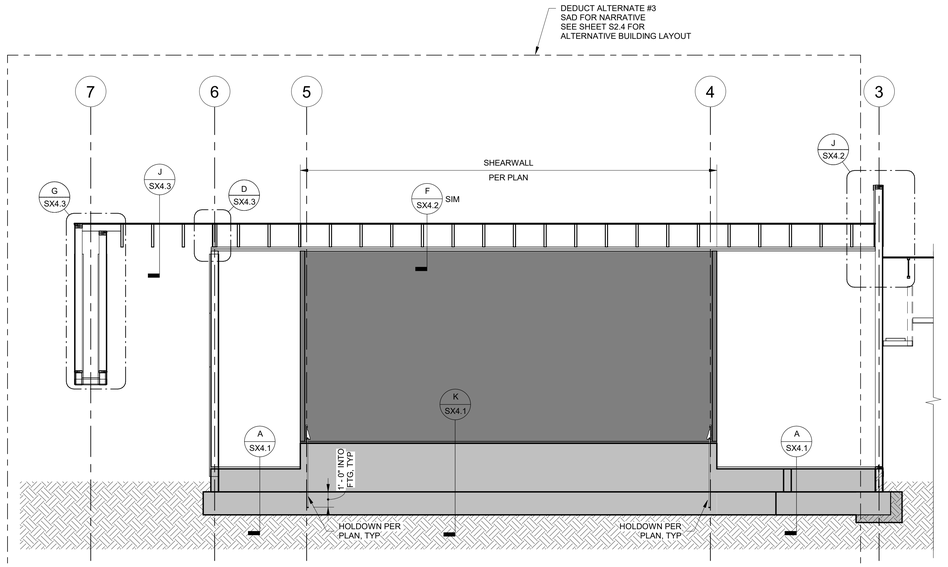

PARTIAL GRID C ELEVATION

1/4" = 1'-0"

3 SN3.4

PBK

www.pbk.com
TX FIRM: BR 1608
HOUSTON, TX
713-965-0608

PARLIER HS STADIUM REPLACEMENT

603 3RD STREET
PARLIER, CA, 93648

DSA BACKCHECK 2

PARLIER UNIFIED SCHOOL DISTRICT

CORNERSTONE structural engineering group
9 River Park Place East, Suite 330
Fresno, California 93720
559.320.3200
fax 559.320.3201

REGISTERED PROFESSIONAL ENGINEER
DUSTIN G. LEE
No. S6623
EXP. 3/31/27
STRUCTURAL
STATE OF CALIFORNIA

CLIENT
PARLIER UNIFIED SCHOOL DISTRICT

DATE	PROJECT NUMBER
6/19/26	250093

DRAWING HISTORY

No.	Description	Date

CHECKED BY: DGL
DRAWN BY: DAA/MRC

BUILDING ELEVATIONS No.2 - BUILDING N

SN3.4

Plot Stamp:
6/19/2026 3:51:58 PM

BUILDING M - MECHANICAL FLOOR PLAN
MM1.1
FOR BLUEBEAM LABELING/OCR:

0"
1"

SHEET NOTES:

1. SEE DETAIL E/MX1.1 FOR S/A GRILLE AND BRANCH DUCT REQUIREMENTS. (TYP.)

2. SEE DETAIL F/MX1.1 FOR R/A & E/A GRILLE AND BRANCH DUCT REQUIREMENTS. (TYP.)

3. SEE DETAIL G/MX1.1 FOR ROUND DUCT HANGING DETAIL. (TYP.)

4. SEE DETAIL B/MX1.1 FOR GRILLE RESTRAINT IN T-BAR. (TYP.)

5. SEE DETAIL A/MX1.1 FOR GRILLE RESTRAINT IN GYP. BOARD CEILING. (TYP.)

6. PROVIDE REMOTE REGULATORS PER DETAIL A/MX1.2 FOR ALL INACCESSIBLE VOLUME DAMPERS (TYP.)

7. SEE DETAIL A/MX1.3 FOR EMS NETWORK DIAGRAM.

KEYNOTES (THIS SHEET ONLY):

1. *25"X22" SA DUCT DROP THRU ROOF.*
2. *16"X16" EXHAUST AIR DUCT RISER UP THRU ROOF TO EF.*
3. *WALL MOUNTED INDOOR UNIT ABOVE DOOR SEE DETAIL K/MX1.1 FOR MTG.*
4. *CEILING CASSETTE INDOOR UNIT SEE DETAIL C/MX1.2 FOR MTG.*
5. *OSA INTAKE FOR IDU, 6"Ø DUCT UP THRU ROOF TRANSITION TO 8"X8" TO GRAVITY VENTILATOR.*
6. *EMS CABINET. 120V POWER & DATA BY ELECTRICAL. SEE DETAILS E AND F/MX1.2 FOR MOUNTING INFORMATION.*

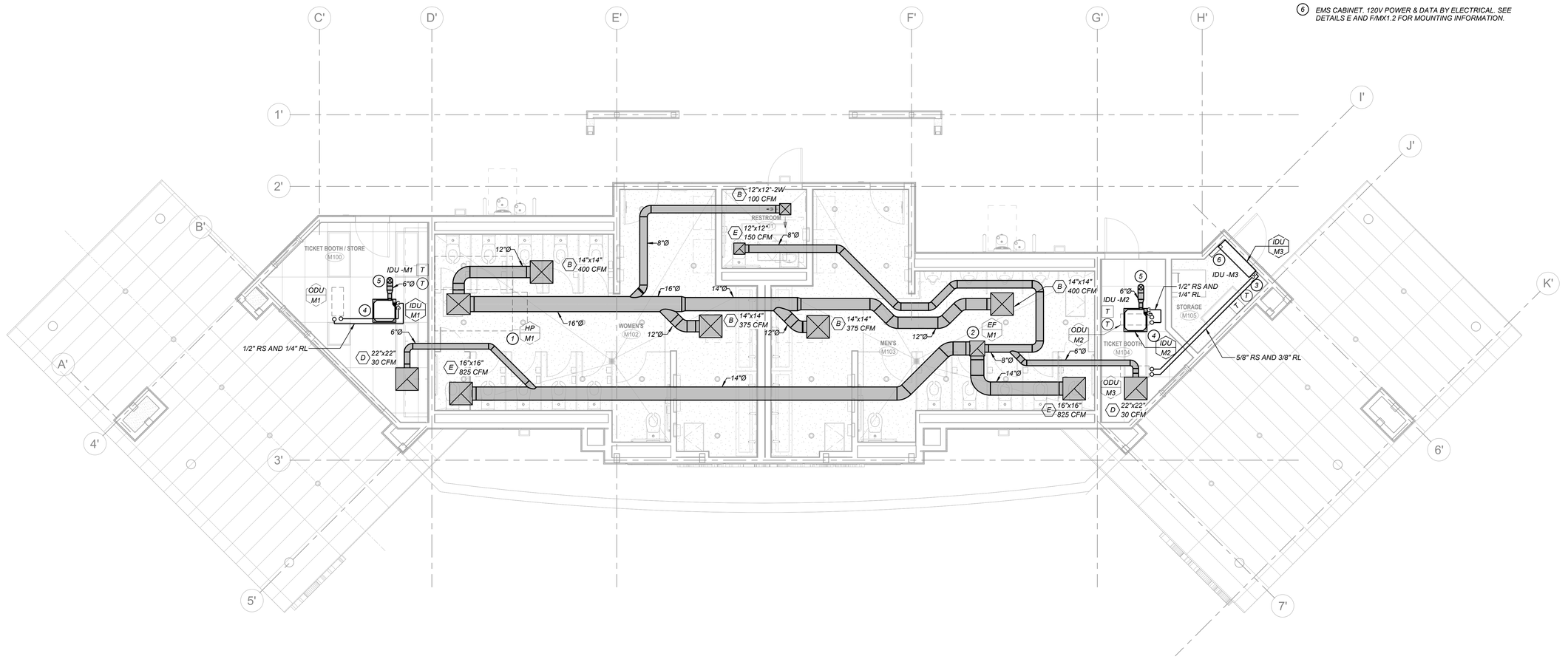

1 BUILDING M - MECHANICAL FLOOR PLAN
1/4" = 1'-0"

TRUE NORTH
N
PLAN NORTH

REGISTERED PROFESSIONAL ENGINEER
RYAN W. BARTLOW
No. 1034846
Exp. 6-30-28
MECHANICAL
STATE OF CALIFORNIA

LAWRENCE ENGINEERING GROUP
4910 E. Clinton Way., Suite 101
(559) 431-0101
25106
Fresno, CA 93727
FAX (559) 431-1362

PBK
www.pbk.com
559-448-8400
FRESNO, CA

PARLIER HS STADIUM REPLACEMENT

603 3rd Street
Parlier, CA 93648

CLIENT PROJECT NO: 250093
DSA SUBMISSION
DSA APPL. NO. : 02-124002 DSA FILE NO. : 10-H12

PARLIER UNIFIED SCHOOL DISTRICT

CLIENT	
PARLIER UNIFIED SCHOOL DISTRICT	
DATE	PROJECT NUMBER
YYYY/MM/DD	250093

DRAWING HISTORY

No.	Description	Date

CHECKED BY: Checker
DRAWN BY: Author

BUILDING M - MECHANICAL FLOOR PLAN

MM1.1

Plot Stamp:
6/19/2026 8:57:17 AM

BUILDING M - MECHANICAL ROOF PLAN
MM2.1
FOR BLUEBEAM LABELING/OCR:

0"
1"

KEYNOTES:

1. *PACKAGE HEAT PUMP. REFER TO DETAIL D/MX1.1 FOR MOUNTING AND G/MX1.2 FOR EMS*
2. *EXHAUST FAN. REFER TO DETAIL M/MX1.1 FOR MOUNTING AND H/MX1.2 FOR EMS*
3. *OUTDOOR UNIT. REFER TO DETAIL J/MX1.1 FOR MOUNTING. FOR PIPING THROUGH ROOF REFER TO DETAIL L/MX1.1 FOR EMS REFER TO DETAIL J/MX1.2*
4. *HOODED GRAVITY INTAKE VENTILATOR SEE DETAIL D/MX1.2 FOR MTG.*

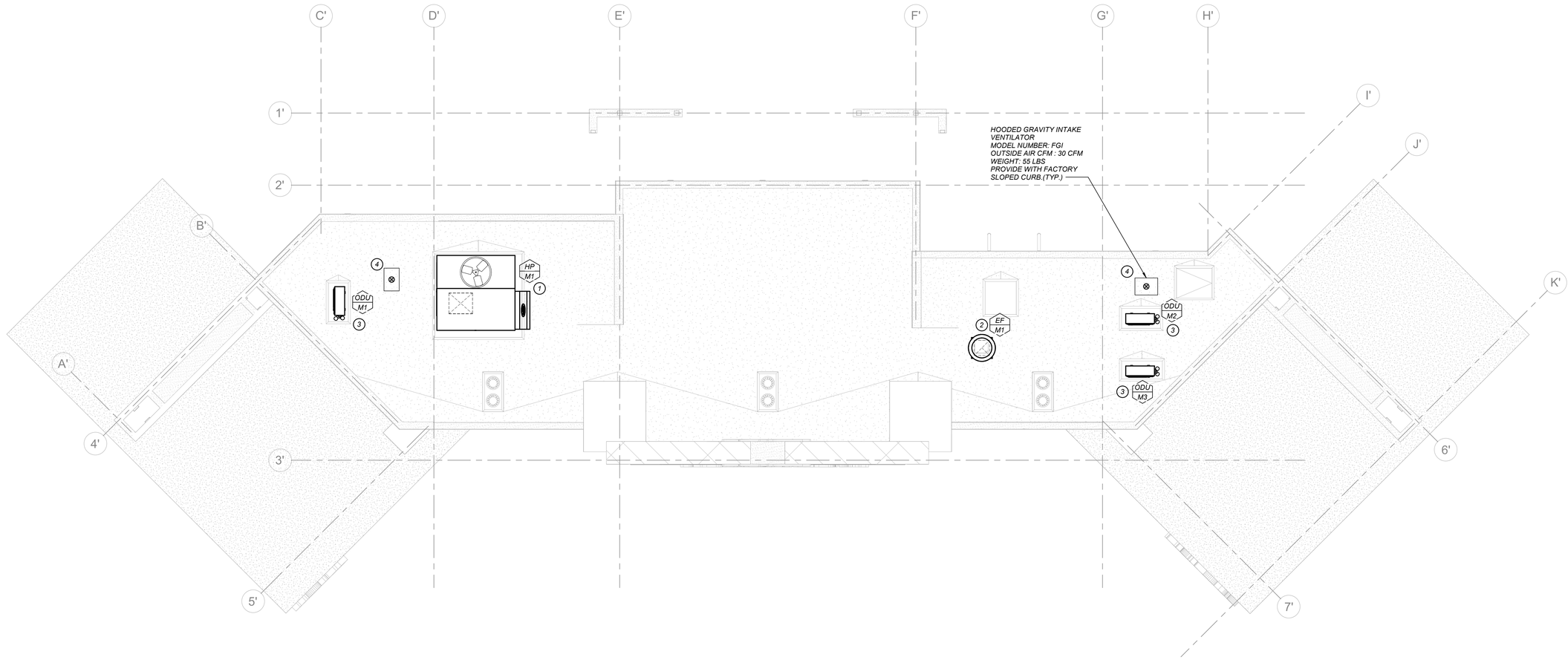

A BUILDING M - MECHANICAL ROOF PLAN
1/4" = 1'-0"

TRUE NORTH
PLAN NORTH

REGISTERED PROFESSIONAL ENGINEER
RYAN W. BARTLOW
No. M34846
Exp. 6-30-28
MECHANICAL
STATE OF CALIFORNIA

LAWRENCE ENGINEERING GROUP
4910 E. Clinton Way., Suite 101
(559) 431-0101
25106
Fresno, CA 93727
FAX (559) 431-1362

PBK
FRESNO, CA
559-448-8400
www.pbk.com

PARLIER HS STADIUM REPLACEMENT

603 3rd Street
Parlier, CA 93648

CLIENT PROJECT NO: 250093
DSA SUBMISSION
DSA APPL. NO. : 02-124002 DSA FILE NO. : 10-H12

PARLIER UNIFIED SCHOOL DISTRICT

CLIENT	
PARLIER UNIFIED SCHOOL DISTRICT	
DATE: YYYY/MM/DD	PROJECT NUMBER: 250093

DRAWING HISTORY

No.	Description	Date

CHECKED BY: Checker
DRAWN BY: Author

BUILDING M - MECHANICAL ROOF PLAN

MM2.1

Plot Stamp:
6/19/2026 8:57:17 AM

BUILDING N - MECHANICAL FLOOR PLAN
MN1.1
FOR BLUEBEAM LABELING/OCR:

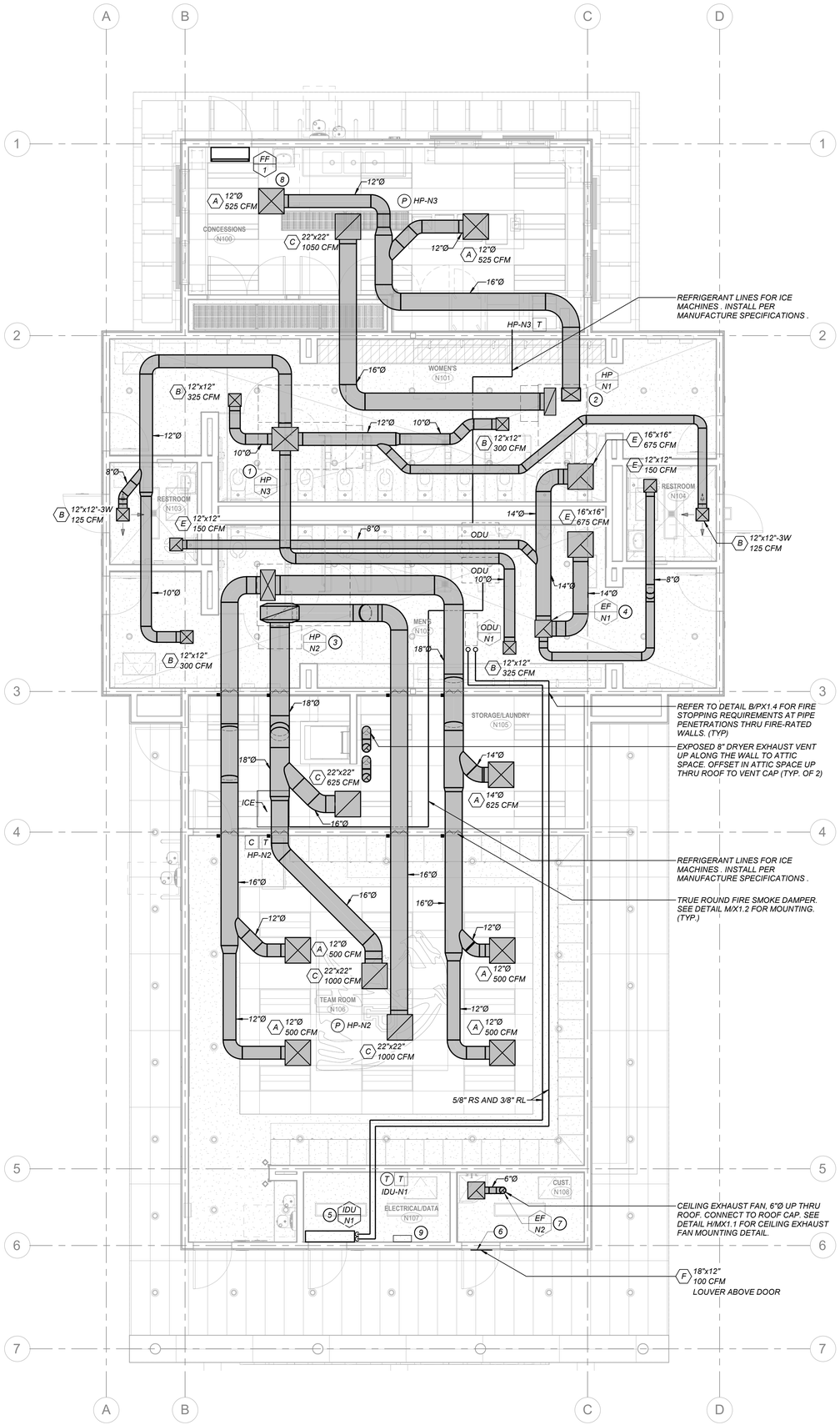

A BUILDING N - MECHANICAL FLOOR PLAN
1/4" = 1'-0"

SHEET NOTES:

1. SEE DETAIL E/MX1.1 FOR S/A GRILLE AND BRANCH DUCT REQUIREMENTS. (TYP.)

2. SEE DETAIL F/MX1.1 FOR R/A & E/A GRILLE AND BRANCH DUCT REQUIREMENTS. (TYP.)

3. SEE DETAIL G/MX1.1 FOR ROUND DUCT HANGING DETAIL. (TYP.)

4. SEE DETAIL B/MX1.1 FOR GRILLE RESTRAINT IN T-BAR. (TYP.)

5. SEE DETAIL A/MX1.1 FOR GRILLE RESTRAINT IN GYP. BOARD CEILING. (TYP.)

6. PROVIDE REMOTE REGULATORS PER DETAIL A/MX1.2 FOR ALL INACCESSIBLE VOLUME DAMPERS (TYP.)

7. SEE DETAIL M/MX1.2 FOR PRESSURE TUBE MOUNTING DETAIL. (TYP.)

8. 8" DRYER DUCT THRU ROOF, SHALL BE FIRE WRAPPED MIN 2" AROUND DUCT, TO VENT CAP (TYP. OF 2). DRYER DUCT SHALL COMPLY WITH THE FOLLOWING (PER CMC 504.4):

1. *THE DRYER EXHAUST DUCT SHALL BE CONSTRUCTED OF RIGID METAL WITH THICKNESS OF NO LESS THAN 0.02" AND SHALL NOT BE ASSEMBLED WITH SCREWS OR OTHER FASTENING MEANS THAT EXTEND INTO THE DUCT AND THAT ARE CAPABLE OF CATCHING LINT.*
2. *DRYER EXHAUST SHALL BE INSTALLED WITH A CLEARANCE OF NOT LESS THAN 6" FROM ADJACENT COMBUSTIBLE MATERIAL. WHERE DUCTS PASS THRU WALLS, FLOORS, OR PARTITIONS, THE SPACE AROUND THE DUCT SHALL BE SEALED WITH NON-COMBUSTIBLE MATERIAL.*
3. *INDIVIDUAL DRYER EXHAUST DUCT CONNECTIONS SHALL NOT EXCEED 14' IN LENGTH.*

9. SEE DETAIL A/MX1.3 FOR EMS NETWORK DIAGRAM.

10. SEE DETAIL N/MX1.2 FOR DUCT THRU WALL DETAIL.

KEYNOTES (THIS SHEET ONLY):

1. *25"X22" SA DUCT DROP THRU ROOF.*
2. *12"X18" SA DUCT DROP THRU ROOF. 26"X11" RA DUCT RISER UP THRU ROOF.*
3. *14"X29" SA DUCT DROP THRU ROOF. 36"X13" RA DUCT RISER UP THRU ROOF.*
4. *16"X16" EXHAUST AIR DUCT RISER UP THRU ROOF TO EF.*
5. *WALL MOUNTED INDOOR UNIT ABOVE DOOR SEE DETAIL K/MX1.1 FOR MTG.*
6. *TRANSFER LOUVER ABOVE DOOR. REFER TO DETAIL L/MX1.2 FOR ADDITIONAL INFORMATION.*
7. *CEILING EXHAUST FAN, 6"Ø UP THRU ROOF. CONNECT TO ROOF CAP. SEE DETAIL C/MX1.1 FOR CEILING EXHAUST FAN MOUNTING DETAIL.*
8. *WALL MOUNTED FLY FAN ABOVE DOOR SEE DETAIL B/MX1.2 FOR MTG.*
9. *EMS CABINET. 120V POWER & DATA BY ELECTRICAL. SEE DETAILS F/MX1.2 FOR MOUNTING INFORMATION.*

PBK
FRESNO, CA
559-448-8400
www.pbk.com

PARLIER HS STADIUM REPLACEMENT

603 3rd Street
Parlier, CA 93648

CLIENT PROJECT NO.: 250093
DSA SUBMISSION 02-124002 DSA FILE NO. : 10-H12
DSA APPL. NO. : 02-124002 DSA FILE NO. : 10-H12

PARLIER UNIFIED SCHOOL DISTRICT

CLIENT
PARLIER UNIFIED SCHOOL DISTRICT
DATE YYYY/MM/DD | PROJECT NUMBER 250093
DRAWING HISTORY

No.	Description	Date

CHECKED BY: Checker
DRAWN BY: Author

REGISTERED PROFESSIONAL ENGINEER
RYAN W. BARROW
No. M34846
Exp. 6-30-28
MECHANICAL
STATE OF CALIFORNIA

PLAN NORTH

LAWRENCE ENGINEERING GROUP
4910 E. Clinton Way., Suite 101 Fresno, CA 93727
(559) 431-0101 25106 FAX (559) 431-1362

BUILDING N - MECHANICAL FLOOR PLAN

MN1.1

Plot Stamp:
6/19/2026 8:57:20 AM

BUILDING N - MECHANICAL FLOOR PLAN - ALT 3
MN1.2
FOR BLUEBEAM LABELING/OCR:

0"
1"

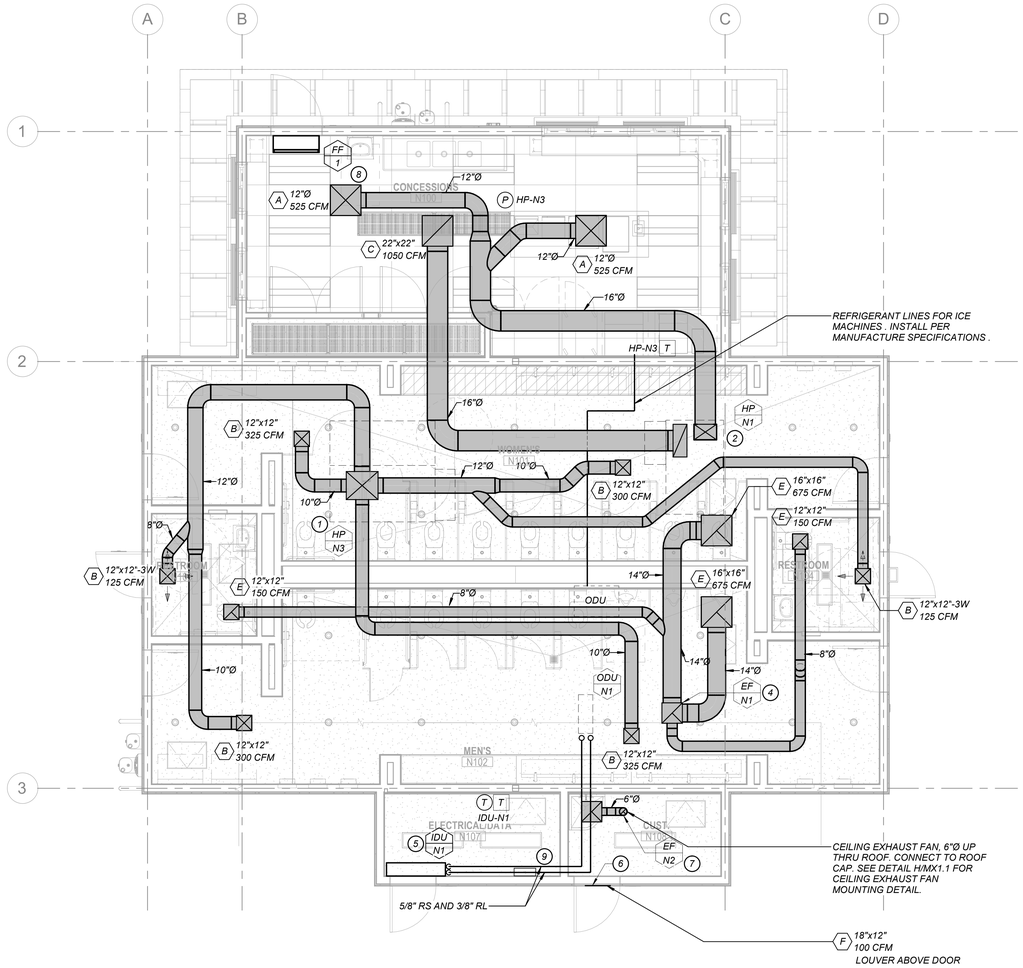

SHEET NOTES:

1. SEE DETAIL E/MX1.1 FOR S/A GRILLE AND BRANCH DUCT REQUIREMENTS. (TYP.)

2. SEE DETAIL F/MX1.1 FOR R/A & E/A GRILLE AND BRANCH DUCT REQUIREMENTS. (TYP.)

3. SEE DETAIL G/MX1.1 FOR ROUND DUCT HANGING DETAIL. (TYP.)

4. SEE DETAIL B/MX1.1 FOR GRILLE RESTRAINT IN T-BAR. (TYP.)

5. SEE DETAIL A/MX1.1 FOR GRILLE RESTRAINT IN GYP. BOARD CEILING. (TYP.)

6. PROVIDE REMOTE REGULATORS PER DETAIL A/MX1.2 FOR ALL INACCESSIBLE VOLUME DAMPERS (TYP.)

7. SEE DETAIL M/MX1.2 FOR PRESSURE TUBE MOUNTING DETAIL. (TYP.)

8. 8" DRYER DUCT THRU ROOF, SHALL BE FIRE WRAPPED MIN 2" AROUND DUCT, TO VENT CAP (TYP. OF 2). DRYER DUCT SHALL COMPLY WITH THE FOLLOWING (PER CMC 504.4):

1. *THE DRYER EXHAUST DUCT SHALL BE CONSTRUCTED OF RIGID METAL WITH THICKNESS OF NO LESS THAN 0.02" AND SHALL NOT BE ASSEMBLED WITH SCREWS OR OTHER FASTENING MEANS THAT EXTEND INTO THE DUCT AND THAT ARE CAPABLE OF CATCHING LINT.*
2. *DRYER EXHAUST SHALL BE INSTALLED WITH A CLEARANCE OF NOT LESS THAN 6" FROM ADJACENT COMBUSTIBLE MATERIAL. WHERE DUCTS PASS THRU WALLS, FLOORS, OR PARTITIONS, THE SPACE AROUND THE DUCT SHALL BE SEALED WITH NON-COMBUSTIBLE MATERIAL.*
3. *INDIVIDUAL DRYER EXHAUST DUCT CONNECTIONS SHALL NOT EXCEED 14' IN LENGTH.*

9. SEE DETAIL A/MX1.3 FOR EMS NETWORK DIAGRAM.

10. SEE DETAIL N/MX1.2 FOR DUCT THRU WALL DETAIL.

KEYNOTES (THIS SHEET ONLY):

1. *25"X22" SA DUCT DROP THRU ROOF.*
2. *12"X18" SA DUCT DROP THRU ROOF. 26"X11" RA DUCT RISER UP THRU ROOF.*
3. ~~*14"X29" SA DUCT DROP THRU ROOF. 36"X13" RA DUCT RISER UP THRU ROOF.*~~
4. *16"X16" EXHAUST AIR DUCT RISER UP THRU ROOF TO EF.*
5. *WALL MOUNTED INDOOR UNIT ABOVE DOOR SEE DETAIL K/MX1.1 FOR MTG.*
6. *TRANSFER LOUVER ABOVE DOOR. REFER TO DETAIL L/MX1.2 FOR ADDITIONAL INFORMATION.*
7. *CEILING EXHAUST FAN, 6"Ø UP THRU ROOF. CONNECT TO ROOF CAP. SEE DETAIL C/MX1.1 FOR CEILING EXHAUST FAN MOUNTING DETAIL.*
8. *WALL MOUNTED FLY FAN ABOVE DOOR SEE DETAIL B/MX1.2 FOR MTG.*
9. *EMS CABINET. 120V POWER & DATA BY ELECTRICAL. SEE DETAILS F/MX1.2 FOR MOUNTING INFORMATION.*

PLAN NORTH

A BUILDING N - MECHANICAL FLOOR PLAN - ALT 3
1/4" = 1'-0"

PBK
FRESNO, CA
559-448-8400
www.pbk.com

PARLIER HS STADIUM REPLACEMENT

603 3rd Street
Parlier, CA 93648

CLIENT PROJECT NO: 250093
DSA SUBMISSION
DSA APPL. NO.: 02-124002 DSA FILE NO.: 10-H12

PARLIER UNIFIED SCHOOL DISTRICT

CLIENT
PARLIER UNIFIED SCHOOL DISTRICT

DATE	PROJECT NUMBER
YYYY/MM/DD	250093

DRAWING HISTORY

No.	Description	Date

CHECKED BY: Checker
DRAWN BY: Author

REGISTERED PROFESSIONAL ENGINEER
RYAN W. PARKINSON
No. M34846
Exp. 6-30-28
MECHANICAL
STATE OF CALIFORNIA

LAWRENCE ENGINEERING GROUP
4910 E. Clinton Way., Suite 101 (559) 431-0101
25106
Fresno, CA 93727 FAX (559) 431-1362

BUILDING N - MECHANICAL FLOOR PLAN - ALT 3

MN1.2

Plot Stamp:
6/19/2026 9:00:20 AM

BUILDING N - MECHANICAL ROOF PLAN
MN2.1
FOR BLUEBEAM LABELING/OCR:

0"
1"

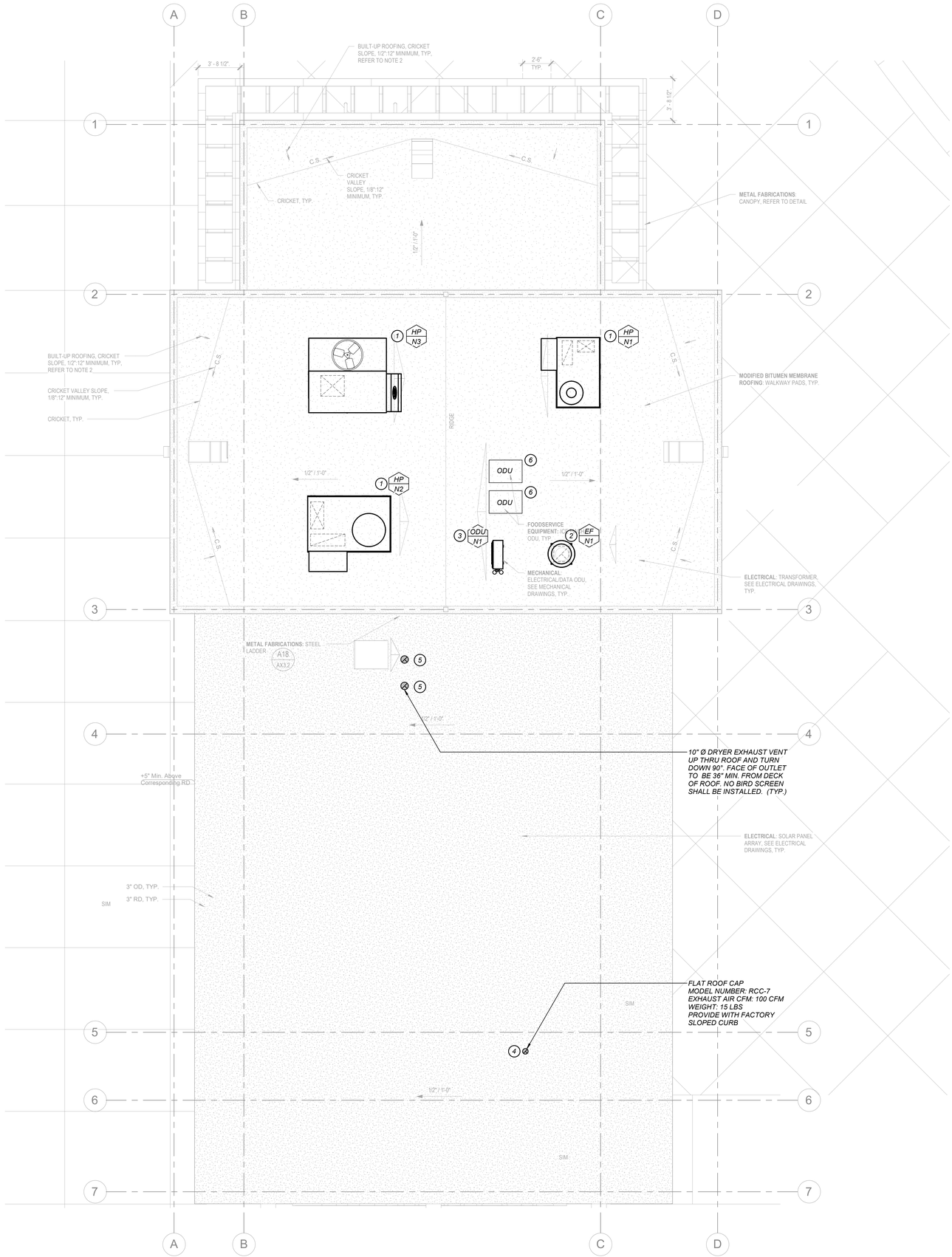

KEYNOTES:

1. *PACKAGE HEAT PUMP. REFER TO DETAIL D/MX1.1 FOR MOUNTING AND G/MX1.2 FOR EMS*
2. *EXHAUST FAN. REFER TO DETAIL M/MX1.1 FOR MOUNTING AND H/MX1.2 FOR EMS*
3. *OUTDOOR UNIT. REFER TO DETAIL J/MX1.1 FOR MOUNTING. FOR PIPING THROUGH ROOF REFER TO DETAIL L/MX1.1 FOR EMS REFER TO DETAIL J/MX1.2*
4. *EXHAUST ROOF CAP. SEE DETAIL D/MX1.2 FOR MTG.*
5. *DRYER EXHAUST DUCT SHALL BE CONSTRUCTED OF RIGID METALLIC MATERIAL AND EQUIPPED WITH BACKDRAFT DAMPER. EXHAUST DUCT SHALL NOT BE ASSEMBLED WITH SCREWS OR OTHER FASTENING MEANS THAT EXTEND INTO THE DUCT AND THAT ARE CAPABLE OF CATCHING LINT AND REDUCE EFFICIENCY OF THE EXHAUST SYSTEM.*
6. *ODU FOR ICE MACHINES. SEE ARCHITICAL PLAN FOR ADDITIONAL INFORMATION.*

A BUILDING N - MECHANICAL ROOF PLAN
1/4" = 1'-0"

PLAN NORTH

PBK
FRESNO, CA
559-448-8400
www.pbk.com

PARLIER HS STADIUM REPLACEMENT

603 3rd Street
Parlier, CA 93648

CLIENT PROJECT NO: 250093
DSA SUBMISSION
DSA APPL. NO. : 02-124002 DSA FILE NO. : 10-H12

PARLIER UNIFIED SCHOOL DISTRICT

CLIENT	
PARLIER UNIFIED SCHOOL DISTRICT	
DATE	PROJECT NUMBER
YYYY/MM/DD	250093

DRAWING HISTORY

No.	Description	Date

CHECKED BY: Checker
DRAWN BY: Author

REGISTERED PROFESSIONAL ENGINEER
RYAN W. BARTLOW
No. 034846
Exp. 6-30-28
MECHANICAL
STATE OF CALIFORNIA

LAWRENCE ENGINEERING GROUP
4910 E. Clinton Way., Suite 101
(559) 431-0101
25106
Fresno, CA 93727
FAX (559) 431-1362

BUILDING N - MECHANICAL ROOF PLAN

MN2.1

Plot Stamp:
6/19/2026 8:57:21 AM

BUILDING N - MECHANICAL ROOF PLAN - ALT 3
MN2.2
FOR BLUEBEAM LABELING/OCR:

0"
1"

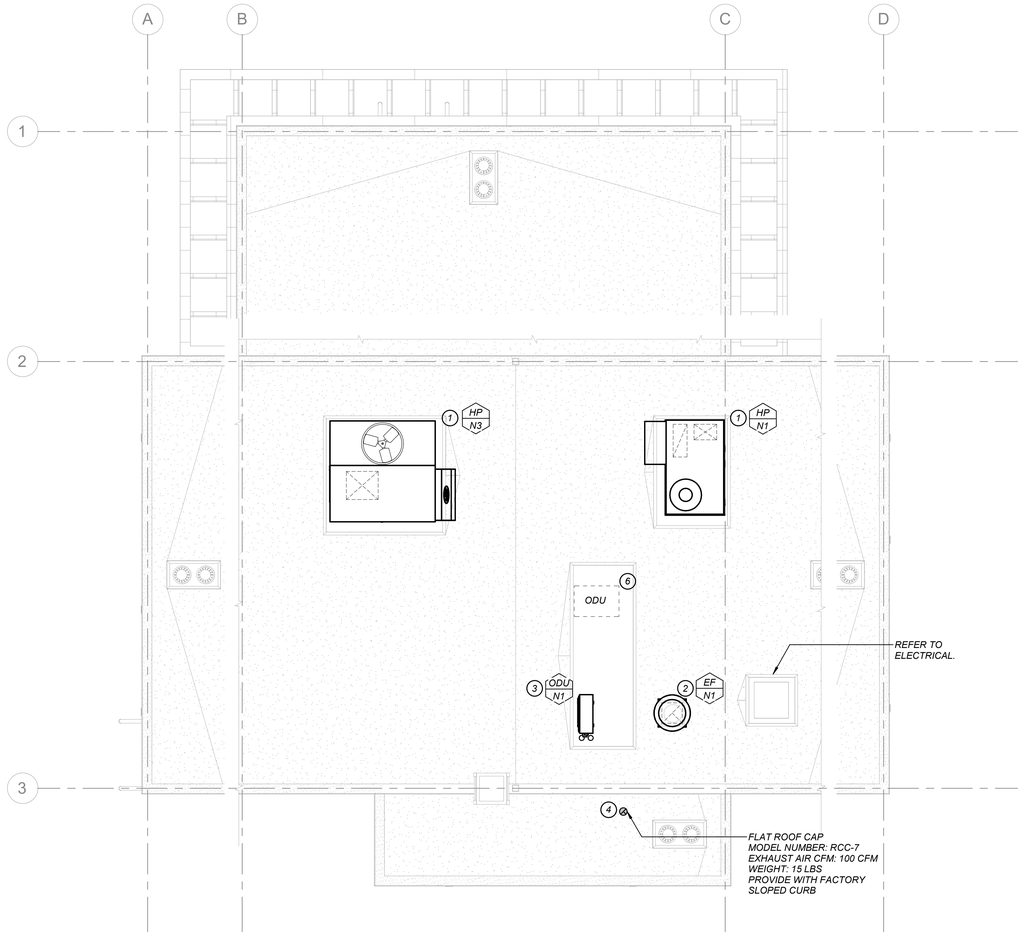

KEYNOTES:

1. *PACKAGE HEAT PUMP. REFER TO DETAIL D/MX1.1 FOR MOUNTING AND G/MX1.2 FOR EMS*
2. *EXHAUST FAN. REFER TO DETAIL M/MX1.1 FOR MOUNTING AND H/MX1.2 FOR EMS*
3. *OUTDOOR UNIT. REFER TO DETAIL J/MX1.1 FOR MOUNTING. FOR PIPING THROUGH ROOF REFER TO DETAIL L/MX1.1 FOR EMS REFER TO DETAIL J/MX1.2*
4. *EXHAUST ROOF CAP. SEE DETAIL D/MX1.2 FOR MTG.*
5. *DRYER EXHAUST DUCT SHALL BE CONSTRUCTED OF RIGID METALLIC MATERIAL AND EQUIPPED WITH BACKDRAFT DAMPER. EXHAUST DUCT SHALL NOT BE ASSEMBLED WITH SCREWS OR OTHER FASTENING MEANS THAT EXTEND INTO THE DUCT AND THAT ARE CAPABLE OF CATCHING LINT AND REDUCE EFFICIENCY OF THE EXHAUST SYSTEM.*
6. *ODU FOR ICE MACHINES. SEE ARCHITICAL PLAN FOR ADDITIONAL INFORMATION.*

A BUILDING N - MECHANICAL ROOF PLAN - ALT 3
1/4" = 1'-0"

PLAN NORTH

PBK
FRESNO, CA
559-448-8400
www.pbk.com

PARLIER HS STADIUM REPLACEMENT

603 3rd Street
Parlier, CA 93648

CLIENT PROJECT NO: 250093
DSA SUBMISSION
DSA APPL. NO. : 02-124002 DSA FILE NO. : 10-H12

PARLIER UNIFIED SCHOOL DISTRICT

CLIENT
PARLIER UNIFIED SCHOOL DISTRICT

DATE	PROJECT NUMBER
YYYY/MM/DD	250093

DRAWING HISTORY

No.	Description	Date

CHECKED BY: Checker
DRAWN BY: Author

REGISTERED PROFESSIONAL ENGINEER
RYAN W. BARTLOW
No. M34846
Exp. 6-30-28
MECHANICAL
STATE OF CALIFORNIA

LAWRENCE ENGINEERING GROUP
4910 E. Clinton Way., Suite 101
(559) 431-0101
25106
Fresno, CA 93727
FAX (559) 431-1362

BUILDING N - MECHANICAL ROOF PLAN - ALT 3

MN2.2

Plot Stamp:
6/19/2026 9:00:20 AM

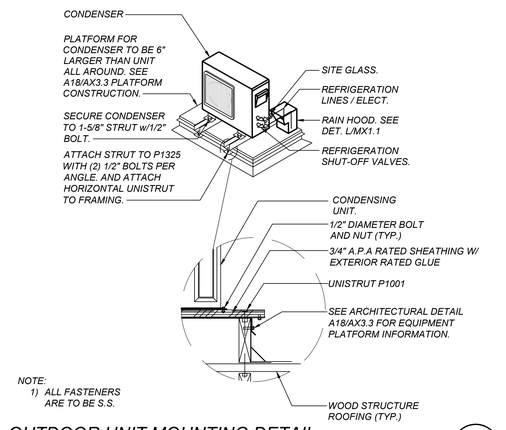

NOTE:
1) ALL FASTENERS ARE TO BE S.S.

OUTDOOR UNIT MOUNTING DETAIL

MM064B — J / MX1.1

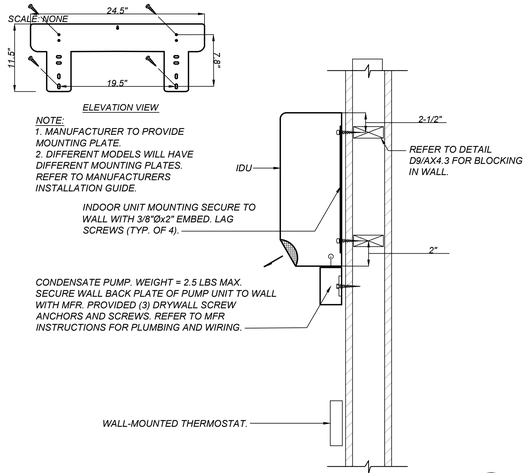

IDU MOUNTING DETAIL (WALL)

SCALE: NONE — K / MX1.1

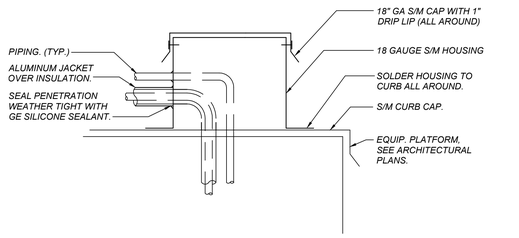

PIPE THRU PLATFORM DETAIL

SCALE: NONE

MP198 — L / MX1.1

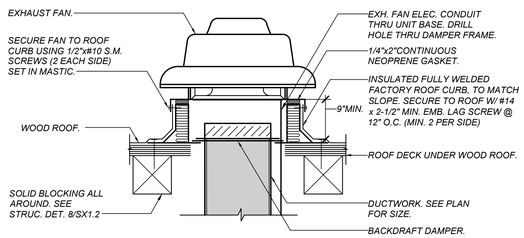

ROOF EXHAUST FAN MOUNTING DETAIL

SCALE: NONE — M / MX1.1

NOTE: FOR GRILLE RESTRAINT. SEE DET. A/MX1.1 AND B/MX1.1.

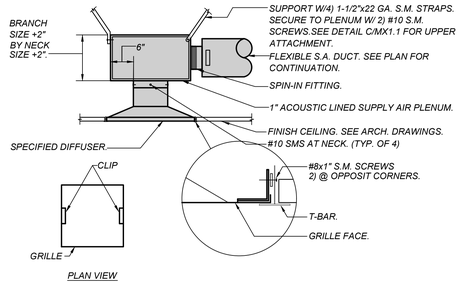

PLAN VIEW

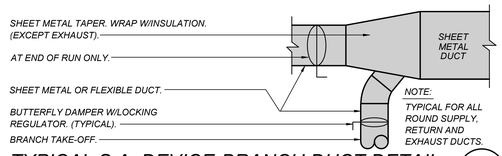

TYPICAL S.A. DEVICE-BRANCH DUCT DETAIL

SCALE: NONE

MD001 — E / MX1.1

NOTE: FOR GRILLE RESTRAINT. SEE DET. A/MX1.1 AND B/MX1.1.

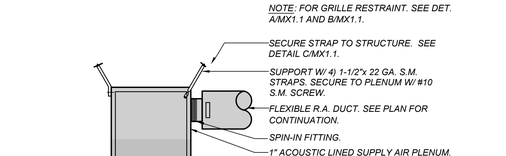

TYPICAL R.A. DEVICE-BRANCH DUCT DETAIL

SCALE: NONE

F / MX1.1

NOTES:
1. DUCT SUPPORTS SHALL BE 10'-0" O.C.
2. ALL DUCTS ARE LESS THAN 36"Ø PER SMACNA - HVAC DUCT CONSTRUCTION STANDARDS, FIGURE 5-5.
3. ALL ROUND DUCT DO NOT REQUIRE SEISMIC BRACING PER DSA 1R 16-13, SECTION 3.3.2. REFER TO ROUND DUCT SESIMIC REGULATIONS FOR ADDITIONAL DETAIL.

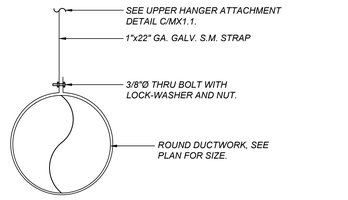

NOTES:

1. THE DETAIL SHALL BE USED ONLY IF ALL OF THE FOLLOWING CONDITIONS ARE MET:
   - THE DUCT HAS A CROSS-SECTIONAL AREA LESS THAN 6.0 SQUARE FEET.
   - THE DUCT WEIGHS 20 POUNDS PER FOOT OR LESS.
   - PER IR 16-13 SECTION 3.5, PROVIDE ADEQUATE SEPARATION TO AVOID IMPACT BETWEEN STRUCTURAL OR NONSTRUCTURAL COMPONENTS BY EITHER (1) CALCULATING REQUIRED CLEARANCE USING ASCE 7 CHAPTER 13 DEFLECTION CRITERIA (USING SRSS OF ADJACENT COMPONENT DEFLECTIONS), (2) USING MINIMUM SEPARATIONS OF 12 IN. BETWEEN UNBRACED AND BRACED COMPONENTS OR 18 IN. BETWEEN ADJACENT UNBRACED COMPONENTS WHEN CALCULATIONS ARE NOT PERFORMED, OR (3) ALLOWING SMALLER SEPARATIONS ONLY FOR COMPONENTS WITH IP = 1.0 WHERE IMPACT WOULD NOT RELEASE CONTENTS OR COMPROMISE OCCUPANT SAFETY, BUILDING INTEGRITY, OR COMPONENT FUNCTIONALITY (E.G., AIR VENTS, AIR DUCTS).
2. NOTIFY DPOR IF ABOVE CONDITION CANNOT BE MET, CDD SHALL BE SUBMITTED TO DSA FOR REVIEW FOR BRACING LAYOUT AND DETAIL.

ROUND DUCT HANGING DETAIL

SCALE: NONE

G / MX1.1

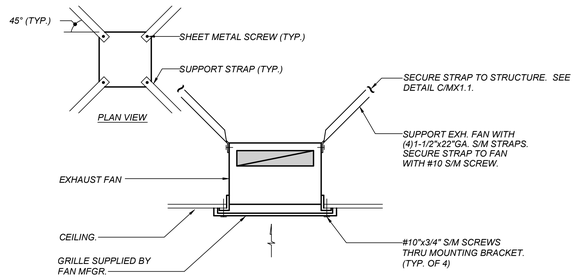

CEILING EXHAUST FAN MOUNTING DETAIL

SCALE: NONE

MM012 — H / MX1.1

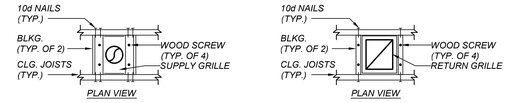

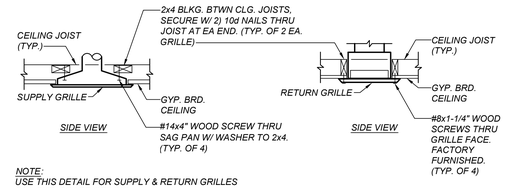

NOTE:
USE THIS DETAIL FOR SUPPLY & RETURN GRILLES IN A GYP. BOARD CEILING.

SURFACE MOUNT GRILLE RESTRAINT DETAIL

SCALE: NONE

MD107 — A / MX1.1

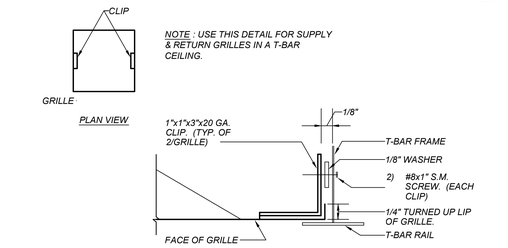

T-BAR GRILLE RESTRAINT DETAIL

SCALE: NONE

MD090 — B / MX1.1

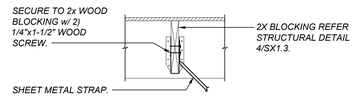

UPPER HANGER ATTACHMENT DETAIL

SCALE: NONE

C / MX1.1

NOTE:
CONDENSATE PIPING TO RISE UP WITHIN CURB. COND. PIPE P-TRAP TO BE OUTSIDE OF CURB & ENTER THRU SIDE OF CURB. POWER WIRING & CONTROL WIRING TO RISE UP WITHIN CURB. FOR POWER WIRING SEE ELEC. PLANS.

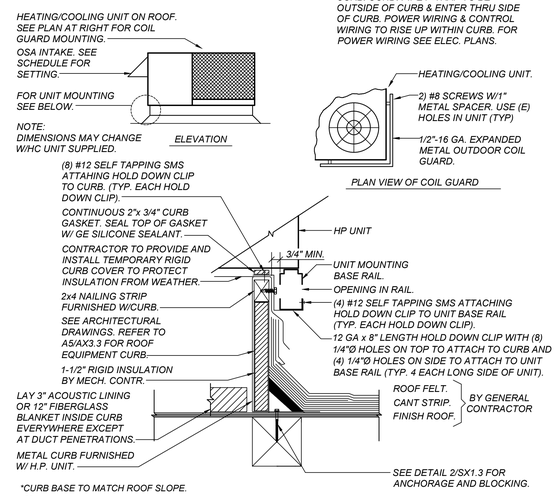

*CURB BASE TO MATCH ROOF SLOPE.

(1) CURB TO HAVE A MINIMUM 8" AND MAXIMUM OF 24" CLEARANCE BETWEEN FINISH ROOF & BOTTOM OF HVAC EQUIPMENT & ACCESSORIES.

H.P. UNIT ROOF MOUNTING DETAIL

SCALE: NONE

D / MX1.1

PBK
www.pbk.com
559-448-8400
FRESNO, CA

PARLIER HS STADIUM REPLACEMENT

603 3rd Street
Parlier, CA 93648

CLIENT PROJECT NO: 250093

DSA SUBMISSION

DSA APPL. NO.: 02-124002 DSA FILE NO.: 10-H12

PARLIER UNIFIED SCHOOL DISTRICT

CLIENT	
PARLIER UNIFIED SCHOOL DISTRICT	
DATE: YYYY/MM/DD	PROJECT NUMBER: 250093

DRAWING HISTORY

No.	Description	Date

CHECKED BY: Checker

DRAWN BY: Author

BENJAMIN W. EARLEY — No. M34846 Exp. 6-30-28 — MECHANICAL — STATE OF CALIFORNIA

LAWRENCE ENGINEERING GROUP
4910 E. Clinton Way, Suite 101
(559) 431-0101
25106
Fresno, CA 93727
FAX (559) 431-1362

MECHANICAL DETAILS

MX1.1

19 June 2026 8:47 AM P:\2025\25106 Parlier HS Stadium Replacement\4-Drawings\4 MX\MX1.1 - MECHANICAL DETAILS.dwg rose

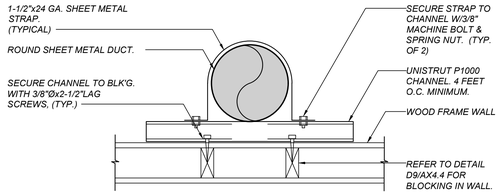

ROUND DUCT ON WALL SUPPORT DETAIL

SCALE: NONE

MD063

K / MX1.2

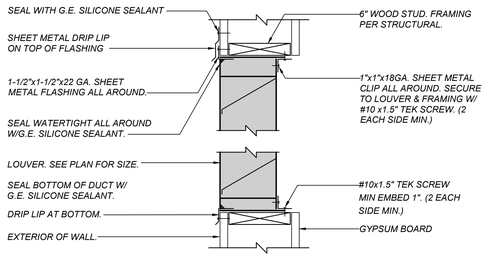

LOUVER MOUNTING DETAIL

SCALE: NONE

MD022

L / MX1.2

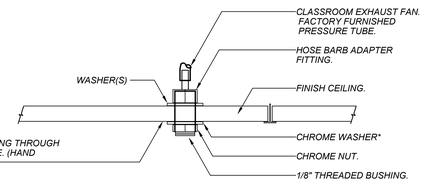

*NOTE: A WHITE COLORED CO-AXIAL COVER PLATE MAY BE USED INSTEAD OF CHROME WASHER.

PRESSURE SENSOR TUBE MOUNTING DETAIL

SCALE: NONE

M / MX1.2

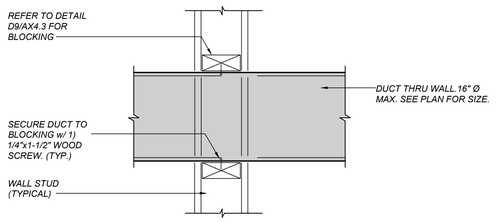

DUCT THRU WOOD WALL DETAIL

SCALE: NONE

MD400

N / MX1.2

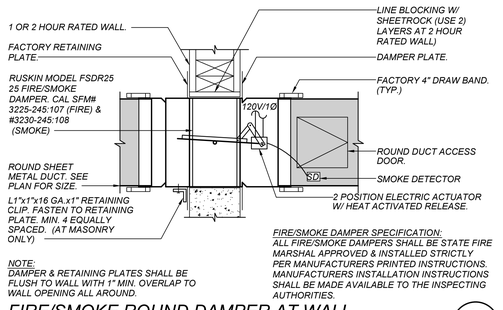

NOTE:
DAMPER & RETAINING PLATES SHALL BE FLUSH TO WALL WITH 1" MIN. OVERLAP TO WALL OPENING ALL AROUND.

FIRE/SMOKE DAMPER SPECIFICATION:
ALL FIRE/SMOKE DAMPERS SHALL BE STATE FIRE MARSHAL APPROVED & INSTALLED STRICTLY PER MANUFACTURERS PRINTED INSTRUCTIONS. MANUFACTURERS INSTALLATION INSTRUCTIONS SHALL BE MADE AVAILABLE TO THE INSPECTING AUTHORITIES.

FIRE/SMOKE ROUND DAMPER AT WALL

SCALE: NONE

FIRE/SMOKE DAMPER DETAIL FOR REFERENCE ONLY.

MF033

M / MX1.2

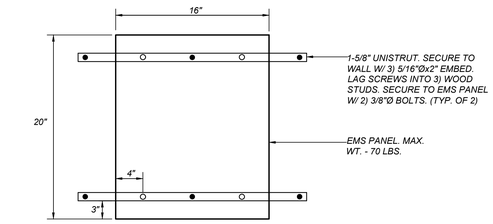

EMS PANEL MOUNTING DETAIL

SCALE: NONE

MC015

E / MX1.2

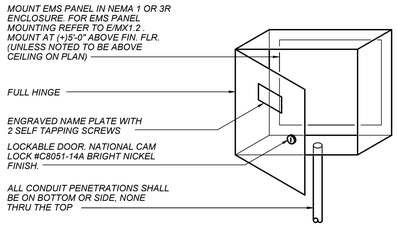

EMS PANEL ENCLOSURE DETAIL

SCALE: NONE

MC014

F / MX1.2

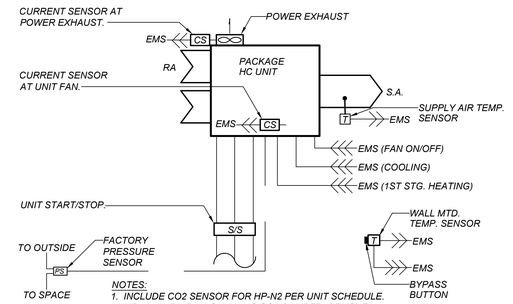

NOTES:
1. INCLUDE CO2 SENSOR FOR HP-N2 PER UNIT SCHEDULE.
2. HP-M1 AND HP-N3 ONLY HAS OSA DAMPER, REMOVE ECONOMIZER & POWER EXHAUST PER UNIT SCHEDULE.

PACKAGE HP UNIT DIAGRAM

SCALE: NONE

MC090

G / MX1.2

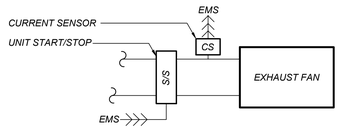

EXHAUST FAN DIAGRAM

SCALE: NONE

MC125

H / MX1.2

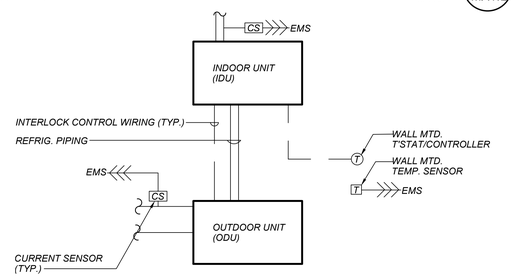

SPLIT SYSTEM DIAGRAM

SCALE: NONE

MC146

J / MX1.2

NOTE:
ALL WIRE CONNECTIONS ARE MADE WITH PRE-WIRED RJ11 PLUGS AND SOCKETS. NO ADDITIONAL WIRING OR TOOL REQUIRED.

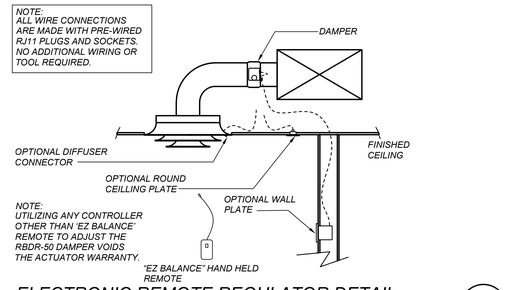

ELECTRONIC REMOTE REGULATOR DETAIL

SCALE: NONE

A / MX1.2

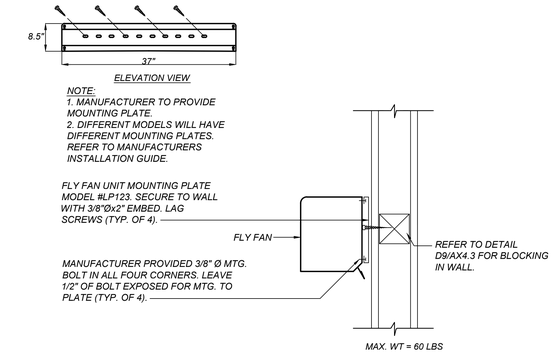

FLY FAN MOUNTING DETAIL

SCALE: NONE

B / MX1.2

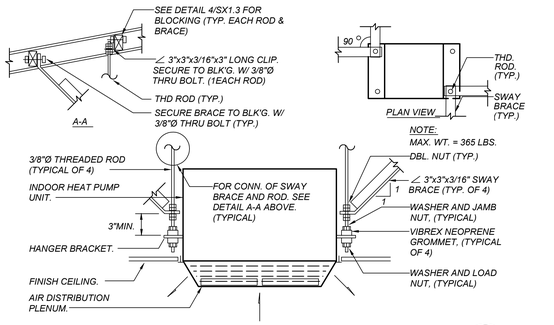

INDOOR CASSETTE UNIT MOUNTING DETAIL

SCALE: NONE

C / MX1.2

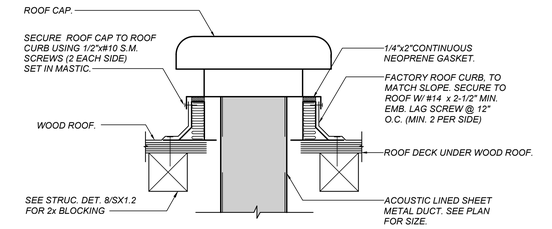

EXHAUST AND GRAVITY VENTILATOR CAP DETAIL

SCALE: NONE

MM028

D / MX1.2

PBK
www.pbk.com
559-448-8400
FRESNO, CA

PARLIER HS STADIUM REPLACEMENT

CLIENT PROJECT NO.: 250093

DSA SUBMISSION DSA FILE NO. : 10-H12

DSA APPL. NO. : 02-124002

603 3rd Street
Parlier, CA 93648

PARLIER UNIFIED SCHOOL DISTRICT

CLIENT	
PARLIER UNIFIED SCHOOL DISTRICT	
DATE: YYYY/MM/DD	PROJECT NUMBER: 250093

DRAWING HISTORY

No.	Description	Date

CHECKED BY: Checker

DRAWN BY: Author



LAWRENCE ENGINEERING GROUP
4910 E. Clinton Way, Suite 101
(559) 431-0101
25106
Fresno, CA 93727
FAX (559) 431-1362

MECHANICAL DETAILS

MX1.2

19 June 2026 8:47 AM P:\2025\25106 Parlier HS Stadium Replacement\1-Drawings\1 MVMX1.1 – MECHANICAL DETAILS.dwg rose

PARLIER HIGH SCHOOL – STADIUM REPLACEMENT

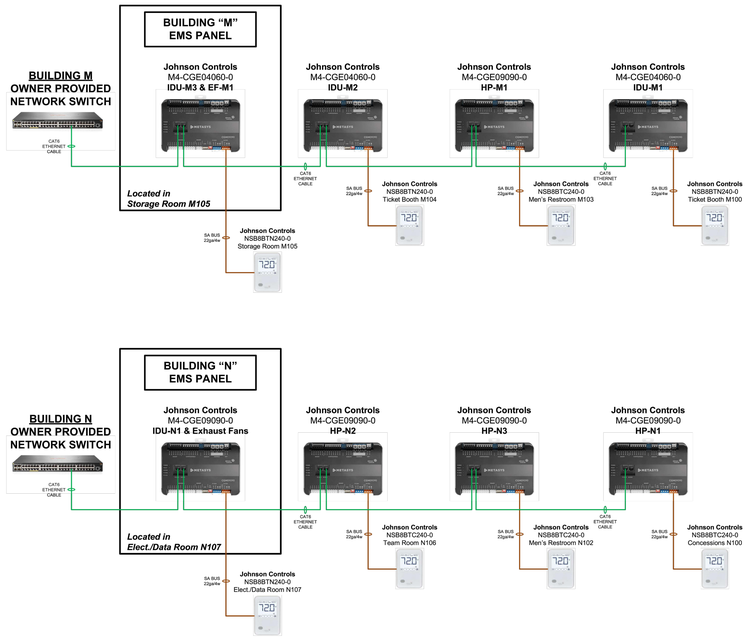

NETWORK DIAGRAM

SCALE: NONE

A
MX1.3

PBK

www.pbk.com

559-448-8400

FRESNO, CA

PARLIER HS STADIUM REPLACEMENT

603 3rd Street
Parlier, CA 93648

CLIENT PROJECT NO: 250093

DSA SUBMISSION

DSA APPL. NO. : 02-124002 DSA FILE NO. : 10-H12

PARLIER UNIFIED SCHOOL DISTRICT

CLIENT
PARLIER UNIFIED SCHOOL DISTRICT

DATE	PROJECT NUMBER
YYYY/MM/DD	250093

DRAWING HISTORY

No.	Description	Date

CHECKED BY: Checker

DRAWN BY: Author

REGISTERED PROFESSIONAL ENGINEER
RYAN W. CARLSON
No. M34846
Exp. 6-30-28
MECHANICAL
STATE OF CALIFORNIA

LAWRENCE
ENGINEERING GROUP
4910 E. Clinton Way, Suite 101
(559) 431-0101
25106
Fresno, CA 93727
FAX (559) 431-1362

MECHANICAL DETAILS

MX1.3

19 June 2026 8:47 AM P:\2025\25106 Parlier HS Stadium Replacement\4-Drawings\4 M\MX1.1 - MECHANICAL DETAILS.dwg rose

GENERAL NOTES :

1. THE INTENT OF THE DRAWING AND SPECIFICATIONS IS TO CONSTRUCT THE BUILDING IN ACCORDANCE WITH THE 2025 EDITION OF TITLE 24, CALIFORNIA CODE OF REGULATIONS. CHANGES TO THE STRUCTURAL, ACCESSIBILITY OR FIRE AND LIFE-SAFETY PORTIONS OF THE APPROVED PLANS AND SPECIFICATIONS SHALL BE MADE BY AN ADDENDUM OR CONSTRUCTION CHANGE DOCUMENT AS REQUIRED IN SECTION 4-338, PART 1, TITLE 24, CCR, AND SHALL BE SUBMITTED TO AND APPROVED BY DSA PRIOR TO COMMENCEMENT OF THE WORK. DOCUMENTS SHALL BE PREPARED AND SUBMITTED TO DSA IN COMPLIANCE WITH DSA INTERPRETATION OF REGULATION IR A-6.

2. THE APPLICABLE CODES AND REGULATIONS FOR THIS PROJECT INCLUDE, BUT ARE NOT LIMITED TO, THE FOLLOWING:

   CALIFORNIA CODE OF REGULATIONS
   - TITLE 8, INDUSTRIAL RELATIONS
   - TITLE 19, PUBLIC SAFETY, STATE FIRE MARSHAL REGULATIONS
   - TITLE 24, PART 1, ADMINISTRATIVE REGULATIONS

   2025 CALIFORNIA BUILDING CODE, PART 2, TITLE 24 CCR
   2025 CALIFORNIA ELECTRICAL CODE, PART 3, TITLE 24 CCR
   2025 CALIFORNIA MECHANICAL CODE, PART 4, TITLE 24 CCR
   2025 CALIFORNIA PLUMBING CODE, PART 5, TITLE 24 CCR
   2025 CALIFORNIA FIRE CODE, PART 9, TITLE 24 CCR
   NFPA 101 2024 EDITION
   OSHA - OCCUPATIONAL SAFETY AND HEALTH ACT

3. LAYOUT OF MATERIALS, EQUIPMENT AND SYSTEMS IS GENERALLY DIAGRAMMATIC UNLESS SPECIFICALLY DIMENSIONED. SOME WORK MAY BE SHOWN OFFSET FOR CLARITY. THE HVAC BUILDING PLANS HAVE BEEN PREPARED TO MATCH THE ARCHITECTURAL PLANS. IF DIFFERENCES OCCUR, THE ARCHITECTURAL PLANS ARE TO TAKE PRECEDENCE. THE ACTUAL LOCATIONS OF ALL MATERIALS, PIPING, DUCTWORK, FIXTURES, EQUIPMENT, SUPPORTS, ETC. SHALL BE CAREFULLY PLANNED, PRIOR TO INSTALLATION OF ANY WORK, TO AVOID ALL INTERFERENCE WITH EACH OTHER, OR WITH STRUCTURAL, ELECTRICAL, ARCHITECTURAL, OR OTHER ELEMENTS. ALL DUCT AND PIPE OFFSET ELBOWS FOR COORDINATION BETWEEN TRADES ARE NOT SHOWN. CONTRACTOR SHALL INCLUDE SUFFICIENT FUNDS FOR THE COORDINATION OFFSETS IN THE BID. VERIFY THE PROPER VOLTAGE AND PHASE OF ALL EQUIPMENT WITH THE ELECTRICAL PLANS. ALL CONFLICTS SHALL BE CALLED TO THE ATTENTION OF THE ARCHITECT AND THE ENGINEER PRIOR TO THE INSTALLATION OF ANY WORK OR THE ORDERING OF ANY EQUIPMENT.

4. WHEN INSTALLING DRILLED-IN ANCHORS AND/OR POWDER-DRIVEN PINS IN EXISTING NON-PRESTRESSED CONCRETE, USE CARE AND CAUTION TO AVOID CUTTING OR DAMAGING THE EXISTING REINFORCING BARS. WHEN INSTALLING THEM INTO EXISTING PRESTRESSED CONCRETE (PRE- OR POST-TENSIONED), LOCATE THE PRESTRESSED TENDONS BY USING A NON-DESTRUCTIVE METHOD PRIOR TO INSTALLATION. EXERCISE EXTREME CARE AND CAUTION TO AVOID CUTTING OR DAMAGING THE TENDONS DURING INSTALLATION. MAINTAIN A MINIMUM CLEARANCE OF ONE INCH BETWEEN THE REINFORCEMENT AND THE DRILLED-IN ANCHOR AND/OR PIN.

5. **MEP COMPONENT ANCHORAGE:**

   ALL MECHANICAL, PLUMBING, AND ELECTRICAL COMPONENTS SHALL BE ANCHORED AND INSTALLED PER THE DETAILS ON THE DSA APPROVED CONSTRUCTION DOCUMENTS. WHERE THERE NO DETAIL IS INDICATED, THE FOLLOWING COMPONENTS SHALL BE ANCHORED OR BRACED TO MEET THE FORCE AND DISPLACEMENT REQUIREMENTS PRESCRIBED IN THE 2025 CBC, SECTIONS 1617A.1.18 THROUGH 1617A.1.26 AND ASCE 7-22 CHAPTERS 13, 26 AND 30.

   1. ALL PERMANENT EQUIPMENT AND COMPONENTS.
   2. TEMPORARY OR MOVABLE EQUIPMENT THAT IS PERMANENTLY ATTACHED (E.G. HARD WIRED) TO THE BUILDING UTILITY SERVICES SUCH AS ELECTRICITY, GAS OR WATER. "PERMANENTLY ATTACHED" SHALL INCLUDE ALL ELECTRICAL CONNECTIONS EXCEPT PLUGS FOR 110/220 VOLT RECEPTACLES HAVING A FLEXIBLE CABLE.
   3. TEMPORARY, MOVEABLE OR MOBILE EQUIPMENT WHICH IS HEAVIER THAN 400 POUNDS OR HAS A CENTER OF MASS LOCATED 4 FEET OR MORE ABOVE THE ADJACENT FLOOR OR ROOF LEVEL THAT DIRECTLY SUPPORT THE COMPONENT IS REQUIRED TO BE RESTRAINED IN A MANNER APPROVED BY DSA.

   THE ATTACHMENT OF THE FOLLOWING MECHANICAL AND ELECTRICAL COMPONENTS SHALL BE POSITIVELY ATTACHED TO THE STRUCTURE, BUT NEED NOT DEMONSTRATE DESIGN COMPLIANCE WITH THE REFERENCES NOTED ABOVE NOR BE DETAILED ON THE PLANS. THESE COMPONENTS SHALL HAVE FLEXIBLE CONNECTIONS PROVIDED BETWEEN THE COMPONENT AND ASSOCIATED DUCTWORK, PIPING, AND CONDUIT. FLEXIBLE CONNECTIONS MUST ALLOW MOVEMENT IN BOTH TRANSVERSE AND LONGITUDINAL DIRECTIONS.

   A. COMPONENTS WEIGHING LESS THAN 400 POUNDS AND HAVE A CENTER MASS LOCATED 4 FEET OR LESS ABOVE THE ADJACENT FLOOR OR ROOF LEVEL THAT DIRECTLY SUPPORTS THE COMPONENT.
   B. COMPONENTS WEIGHING LESS THAN 20 POUNDS, OR IN THE CASE OF DISTRIBUTED SYSTEMS, LESS THAN THAN 5 POUNDS PER FOOT, WHICH ARE SUSPENDED FROM A ROOF OR FLOOR OR HUNG FROM A WALL.

   FOR THOSE ELEMENTS THAT DO NOT REQUIRE DETAILS ON THE APPROVED DRAWINGS, THE INSTALLATION SHALL BE SUBJECT TO THE APPROVAL OF THE STRUCTURAL ENGINEER OF RECORD AND THE DSA DISTRICT STRUCTURAL ENGINEER. THE PROJECT INSPECTOR WILL VERIFY THAT ALL COMPONENTS AND EQUIPMENT HAVE BEEN ANCHORED IN ACCORDANCE WITH ABOVE REQUIREMENTS.

   PIPING, DUCTWORK, AND ELECTRICAL DISTRIBUTION SYSTEM BRACING:

   PIPING, DUCTWORK, AND ELECTRICAL DISTRIBUTION SYSTEMS SHALL BE BRACED TO COMPLY WITH THE FORCES AND DISPLACEMENTS PRESCRIBED IN ASCE 7 SECTION 13.3 AS DEFINED IN ASCE 7 SECTION 13.6.5, 13.6.6, 13.6.7, 13.6.8, AND 2025 CBC, SECTIONS 1617A.1.24, 1617A.1.25, 1617A.1.26.

   THE METHOD OF SHOWING BRACING AND ATTACHMENTS TO THE STRUCTURE FOR THE IDENTIFIED DISTRIBUTION SYSTEM ARE AS NOTED BELOW. THE MEP DESIGN PROFESSIONAL ENGINEER RESPONSIBLE FOR THE CONTENT ON THE SHEETS HAS VERIFIED THAT THE DESIGN METHODS IDENTIFIED BELOW ARE IN ACCORDANCE WITH DSA IR16-13.

   MECHANICAL PIPING (MP), MECHANICAL DUCTS (MD), PLUMBING PIPING (PP), ELECTRICAL DISTRIBUTION SYSTEMS (E):

   MP☒ MD☒ PP☐ E☐ — OPTION 1: DETAILED ON THE APPROVED DRAWINGS WITH PROJECT SPECIFIC NOTES AND DETAILS.

   MP☐ MD☐ PP☐ E☐ — OPTION 2: SHALL COMPLY WITH THE APPLICABLE OSHPD OPM, WITHIN PROJECT SUBMITTAL.

   MP☐ MD☐ PP☐ E☐ — OPTION 3: SHALL COMPLY WITH THE APPLICABLE OSHPD OPM, DEFERRED SUBMITTAL

6. PENETRATIONS THROUGH FIRE RATED WALLS, FLOOR/CEILING, AND ROOF/CEILING ASSEMBLIES SHALL BE SEALED USING AN APPROVED SYSTEM CAPABLE OF PREVENTING THE PASSAGE OF FLAMES AND HOT GASES WHEN SUBJECTED TO THE REQUIREMENTS OF THE TEST STANDARD SPECIFIC TO FIRE STOPS PER 2025 CBC SECTION 714. THIS INCLUDES EXISTING PIPE AND CONDUIT THROUGH NEW ASSEMBLIES. CUSTOM DESIGNED SYSTEMS WHICH COMBINE COMPONENTS FROM DIFFERENT APPROVED SYSTEMS BUT HAVE NOT BEEN TESTED AS A COMPLETE ASSEMBLY WILL NOT BE ACCEPTABLE. FOR FIRE STOPS FOR PIPE PENETRATIONS SEE SPECIFICATIONS.

7. DUCTWORK SIZES SHOWN ARE INSIDE CLEAR DIMENSIONS. WHERE ACOUSTIC LINING IS SHOWN, INCREASE EACH SHEET METAL DIMENSION TO ACCOMMODATE LINING & MAINTAIN CLEAR INSIDE DUCT DIMENSIONS SHOWN.

8. SA DUCTWORK SHALL BE 1" PRESSURE CLASS, AND RA & EA DUCTWORK SHALL 1" PRESSURE CLASS UNLESS OTHERWISE NOTED.

9. ALL DIFFUSERS ARE 4-WAY DISTRIBUTION UNLESS OTHERWISE NOTED ON THE PLANS.

10. A DSA CERTIFIED PROJECT INSPECTOR (CLASS 2) EMPLOYED BY THE DISTRICT & APPROVED BY DSA SHALL PROVIDE CONTINUOUS INSPECTION OF THE WORK. THE DUTIES OF THE INSPECTOR ARE DEFINED IN SECTION 4-338, PART 1, TITLE 24, CCR.

11. A DSA ACCEPTED TESTING LABORATORY DIRECTLY EMPLOYED BY THE DISTRICT SHALL CONDUCT ALL THE REQUIRED TESTS AND INSPECTIONS FOR THE PROJECT.

AIR CONDITIONING LEGEND

SYMBOL	ITEM	ABBR
	ROUND DUCT	Ø
	FLAT OVAL DUCT	⊖
	SHEET METAL DUCT	—
	ACOUSTIC LINING FOR DUCT OR GRILLES	(L)
	SUPPLY AIR DUCT DROP	—
	RETURN AIR DUCT DROP	—
	EXHAUST DUCT AIR DROP	—
	SUPPLY AIR DUCT RISE	—
	RETURN AIR DUCT RISE	—
	EXHAUST AIR DUCT RISE	—
	TURNING VANES	TV
	EXTRACTOR	—
	VOLUME CONTROL DAMPER W/LOCKING QUADRANT	VCD
	OPPOSED BLADE DAMPER	OBD
	BACKDRAFT DAMPER	BDD
	VOLUME CONTROL DAMPER W/ REMOTE REGULATOR	VCR
& ■	FIRE/SMOKE DAMPER WITH ACCESS PANEL	F/SD
& ▲	FIRE DAMPER WITH ACCESS PANEL	FD
& ◆	SMOKE DAMPER WITH ACCESS PANEL	SD
CFM	CUBIC FEET OF AIR PER MINUTE	CFM
M	EMS MOTORIZED DUCT DAMPER/ PIPE VALVE ACTUATOR	—
Ⓣ	THERMOSTAT @ +4'-0" TOP OF BOX	T'STAT
Ⓗ	HUMIDISTAT @ +4'-0" TOP OF BOX	H'STAT
Ⓒ	CO_2 SENSOR @ +4'-0" TOP OF BOX	CO_2
T	EMS TEMPERATURE SENSOR @ +4'-0" TOP OF BOX	—
H	EMS HUMIDITY SENSOR @ +4'-0" TOP OF BOX	—
C	EMS CO_2 SENSOR @ +4'-0" TOP OF BOX	CO_2
SP	EMS STATIC PRESSURE SENSOR	SP
DP	EMS DIFFERENTIAL PRESSURE SENSOR	DP
CS	EMS CURRENT SENSOR	CS
	DIRECTION OF FLOW	—
	SUPPLY AIR	SA
	RETURN AIR	RA
	EXHAUST AIR	EA
—	OUTSIDE AIR	OSA
	PIPE/DUCT TURN DOWN	—
	PIPE/DUCT TURN UP	—
	POINT OF CONNECTION	POC
------	EXISTING (DESIGNATED)	(E)
	NEW (DESIGNATED)	(N)
SD	DUCT SMOKE DETECTOR	SD
A/V	AUDIBLE/VISUAL ALARM	A/VA
	BYPASS TIMER	BPT
—EMS—	ENERGY MANAGEMENT SYSTEM CABLE IN CONDUIT	EMS

FLY FAN SCHEDULE

DESIGNATION	FF 1
CFM	1178
FPM AT NOZZLE	2142
(QUANTITY) HP	1/5
VOLTS/ PHASE	120 / 1
MANUFACTURER	POWERED AIRE INC.
TYPE	UNHEATED
MODEL NUMBER	RMP - 1 - 36
CONTROL	MAGNETIC SWITCH
LOCATION	CONCESSIONS
OPER. WT. (LBS)	55
ACCESSORIES	1, 2, 3

1. 24V MAGNETIC DOOR SWITCH
2. WASHABLE FILTER
3. PROVIDE WITH LP123 QUICK MOUNTING PLATE

PACKAGE HEAT PUMP SCHEDULE

	DESIGNATION	HP M1	HP N1	HP N2	HP N3
	VOLTS / PHASE	460 / 3	460 / 3	460 / 3	460 / 3
	FLA / MCA	30 / 36	- / 18	- / 37	30 / 36
	M.O.C.P	45	20	40	45
	EER / IEER / SEER (AT ARI)	11.37 / 14.1 / -	9.4 / - / 17.0	12.2 / 17 / -	11.37 / 14.1 / -
BLOWER	CFM	1,650	1,050	2,625	1,500
BLOWER	EXT. SP (IN WC)	0.8	0.8	0.8	0.8
BLOWER	MIN OSA	1,650	75	740	1,500
BLOWER	HP / BHP	2 / 0.65	- / 0.45	- / 1.01	2 / 0.58
BLOWER	RPM	1,344	1,837	1,416	1,287
BLOWER	DRIVE	DIRECT	DIRECT	DIRECT	DIRECT
COOLING	SENSIBLE (MBH)	87	22.4	79.5	80.1
COOLING	TOTAL (MBH)	91.7	30.67	90.39	88.2
COOLING	EADB / EAWB (°F)	105 / 72	78 / 64	84 / 66.7	105 / 72
COOLING	AMBIENT AIR (°F)	105	105	105	105
COOLING	REFRIGERANT	R - 454B	R - 454B	R - 454B	R - 454B
COOLING	REFRIGERANT CLASS	A2L	A2L	A2L	A2L
HEATING	CAPACITY @ 47 DEG. (MBH)	76.4	19.2	57.79	76.5
HEATING	COP	3.60	3.90	3.60	3.17
HEATING	AUXILARY ELEC. (KW)	10	5.5	10.6	10
HEATING	NO. OF STAGES	-	-	-	-
FILTER	QUANTITY / SIZE (RETURN)	SEE FACTORY	4 / 20X20X4	2 / 16X25X4	SEE FACTORY
FILTER	TYPE	MERV 13	MERV 13	MERV 13	MERV 13
FILTER	QUANTITY / SIZE (OSA)	SEE FACTORY	-	-	SEE FACTORY
FILTER	TYPE	4" PLEATED	-	-	4" PLEATED
FILTER	P D (IN WC)	N/A	-	-	N/A
	MANUFACTURER	AAON	CARRIER	CARRIER	AAON
	TYPE	HEAT PUMP	HEAT PUMP	HEAT PUMP	HEAT PUMP
	MODEL NUMBER	RN-008-3-0-GBBC	50GEQM04A2M6	50GEQM08A2M6	RN-008-3-0-GBBC
	LOCATION	ROOF	ROOF	ROOF	ROOF
	OPER. WT. (LBS)	1,650	1,100	1,800	1,650
	ACCESSORIES	1, 3, 4, 6, 9, 10, 11, 12, 13	1, 2, 3, 4, 6, 7	1, 2, 3, 4, 5, 6, 8, 14	1, 3, 4, 6, 9, 10, 11, 12, 13

1. FACTORY SLOPED SEISMIC CURB
2. TITLE 24 COMPLIANT DRY BULB MODULATING ECONOMIZER, ACTUATOR & CONTROLLED BY EMS
3. SUPPLEMENTAL ELECTRIC STRIP HEAT
4. EMS CONTRACTOR TO PROVIDE BACNET/IP METASYS INTEGRATION WITH FIELD INSTALLED CONTROLLER
5. DEMAND CONTROL VENTILATION WITH CO2 SENSOR (BY EMS)
6. REFRIGERANT DETECTOR FOR UNIT SHUTDOWN. CLASSIFIED AS LOW PROBABILITY SYSTEM PER CMC 1103.2
7. MODULATING POWERED EXHAUST W/ 460/3PH SEPARATE DISCONNECT, 2.4 FLA
8. MODULATING POWERED EXHAUST W/ 460/3PH SEPARATE DISCONNECT, 1.2 FLA
9. VFD FOR BALANCING
10. ECM CONDENSER FANS WITH COIL GUARDS
11. LOW LEAK MOTORIZED OSA DAMPER
12. DOUBLE WALL CONSTRUCTION W/ S/S DRIP PANS
13. VARIABLE CAPACITY SCROLL COMPRESSOR
14. SMOKE DETECTOR FOR AUTOMATIC SHUTOFF NOT REQUIRED PER CMC 609.1 EXCEPTION (2).

GRILLE SCHEDULE

MARK	DUTY	DESCRIPTION
A	CEILING SUPPLY	TITUS TDC (TYPE 3) LOUVER FACE SQUARE OR RECTANGULAR NECK DIFFUSER FOR STD. LAY-IN CEILING, AND NO. 26 OFF-WHITE FINISH. (18"X18" NECK ADAPTER SIZE SHOWN).
B	CEILING SUPPLY	TITUS TDC (TYPE 1) LOUVER FACE SQUARE OR RECTANGULAR NECK DIFFUSER FOR SURFACE MOUNTING. NO. 26 OFF-WHITE FINISH.
C	CEILING RETURN	TITUS CORE 50F (TYPE 3) ALUMINUM EGG CRATE REGISTER WITH 1/2" x 1/2" GRID, FOR LAY-IN CEILING. NO. 26 OFF-WHITE FINISH.
D	CEILING EXHAUST	TITUS CORE 50F (TYPE 3) ALUMINUM EGG CRATE REGISTER WITH 1/2" x 1/2" GRID, FOR LAY-IN CEILING. NO. 26 OFF-WHITE FINISH.
E	CEILING EXHAUST	TITUS CORE 50F (TYPE 1) ALUMINUM EGG CRATE REGISTER WITH 1/2" x 1/2" GRID, FOR SURFACE MOUNTING. NO. 26 OFF-WHITE FINISH.
F	WALL RELIEF OR INTAKE LOUVER	RUSKIN L811 20 GAGE GALVANIZED SHEET METAL LOUVER WITH 3/4" MESH SCREEN ON INSIDE FACE. COORDINATE WITH ARCH FOR FINISH.

ROUND DUCT SEISMIC REGULATIONS

24 GA. (LBS/SQFT)	1.156	HANGER SPACING: 10' O.C.
22 GA. (LBS/SQFT)	1.406	

DUCT DIAM. (IN.)	GALV. METAL GA.	CROSS-SECTIONAL AREA (SQFT)	GALV. METAL LBS/FT
6"	24	0.20	2.0
8"	24	0.35	2.8
10"	24	0.55	3.1
12"	24	0.79	4.1
14"	24	1.07	4.8
16"	24	1.40	5.5
18"	24	1.77	6.1
20"	24	2.18	6.8
22"	22	2.64	9.1
24"	22	3.14	9.9

NOTES:
1. CROSS-SECTIONAL AREA FOR ALL DUCTS IS LESS THAN 6 SQ.FT.
2. ALL DUCTS ARE LESS THAN 20 LBS PER LINEAL FOOT.
3. THE SEPARATION DISTANCE BETWEEN AN UNBRACED COMPONENT AND BRACED ELEMENTS OR COMPONENTS SHALL BE BASED ON A MINIMUM HORIZONTAL DISTANCE OF 12 INCHES. WHEN ADJACENT COMPONENTS ARE ALSO UNBRACED, THIS SEPARATION SHALL BE INCREASED TO A MINIMUM OF 18 INCHES.

INDOOR UNIT SCHEDULE

	DESIGNATION	IDU M1	IDU M2	IDU M3	IDU N1
BLOWER	SUPPLY AIR (CFM)	385	385	618	618
BLOWER	EXT. S P (IN. WC)	-	-	-	-
BLOWER	MIN. O.S.A. (CFM)	30	30	-	-
BLOWER	MOCP	SEE ODU M1	SEE ODU M1	SEE ODU-M3	SEE ODU-N1
BLOWER	MCA / FLA (AMPS)	SEE ODU-M1	SEE ODU-M1	SEE ODU-M3	SEE ODU-N1
BLOWER	VOLTS / PHASE	208 / 1	208 / 1	208 / 1	208 / 1
BLOWER	SEER / EER	-	-	-	-
BLOWER	SEER2 / EER2	SEE ODU-M1	SEE ODU-M1	23.1 / 14	23.1 / 14
COOLING	SENSIBLE (MBH)	12.160	12.160	19.70	19.70
COOLING	TOTAL (MBH)	14.70	14.70	25	25
COOLING	EADB/EAWB (°F)	80 / 67	80 / 67	80 / 67	80 / 67
COOLING	REFRIGERANT	R454B	R454B	R454B	R454B
COOLING	REFRIGERANT CLASS	A2L	A2L	A2L	A2L
HEATING	CAPACITY (MBH) @47°F	16.6	16.6	22.9	22.9
HEATING	KW	-	-	-	-
HEATING	STAGES	-	-	-	-
FILTER	QUANTITY/SIZE	FACTORY	FACTORY	-	-
FILTER	TYPE	FACTORY	FACTORY	-	-
FILTER	P D (IN. WC)	0.3	0.3	-	-
	MANUFACTURER	CARRIER	CARRIER	CARRIER	CARRIER
	TYPE	CASSETTE	CASSETTE	HIGHWALL	HIGHWALL
	MODEL NUMBER	45MBCAQ18XA3	45MBCAQ18XA3	45MAHAQ24XA3	45MAHAQ24XA3
	CONDENSING UNIT	ODU-M1	ODU-M2	ODU-M3	ODU-N1
	SERVICE	TICKET BOOTH	TICKET BOOTH	STORAGE	STORAGE
	LOCATION	CEILING	CEILING	WALL	WALL
	OPER. WT (LBS)	45	45	60	60
	ACCESSORIES	1, 2	1, 2	1, 2, 3	1, 2, 3

1. POWER FROM ASSOCIATED ODU.
2. FACTORY PROVIDED CONDENSATE PUMP AND THERMOSTAT INTERFACE.
3. THERMOSTAT INTERFACE FOR TEMEPRATURE MONITORING AT EMS. EMS SHALL ALARM ANYTIME SPACE TEMPERATURE REACHES ABOVE 78ºF (ADJ.)

OUTDOOR UNIT SCHEDULE

DESIGNATION	ODU M1	ODU M2	ODU M3	ODU N1
COOLING CAPACITY (MBH)	14.70	14.70	25.0	25.0
HEATING CAPACITY (MBH)	16.60	16.60	22.90	22.90
NOMINAL TONS	1.50	1.50	2.0	2.0
VOLTS/PHASE	208 / 1	208 / 1	208 / 1	208 / 1
FLA	-	-	-	-
MCA / MOCP	18 / 20	18 / 20	24 / 25	24 / 25
SEER2 / EER2	20.8 / 12.5	20.8 / 12.5	23.1 / 14	23.1 / 14
SEER / EER (AT ARI)	-	-	-	-
HSPF/COP (AT 47°F)	11.4 / 3.36	11.4 / 3.36	11.7 / 3.96	11.7 / 3.96
AMBIENT (°F)	105	105	105	105
REFRIG. LINE SIZE				
LIQUID (IN.OD)	1/4"	1/4"	3/8"	3/8"
SUCTION (IN. OD)	1/2"	1/2"	5/8"	5/8"
REFRIG. TYPE	R454B	R454B	R454B	R454B
MANUFACTURER	CARRIER	CARRIER	CARRIER	CARRIER
TYPE	SPLIT HEAT PUMP	SPLIT HEAT PUMP	SPLIT HEAT PUMP	SPLIT HEAT PUMP
MODEL NUMBER	37MARAQ18AA3	37MARAQ18AA3	37MARAQ24AA3	37MARAQ24AA3
SERVICE	IDU-M1	IDU-M2	IDU-M3	IDU-N1
LOCATION	ROOF	ROOF	ROOF	ROOF
OPER. WT (LBS)	115	115	130	130
ACCESSORIES	1, 2	1, 2	1, 2	1, 2

1. FACTORY DRAIN SOCKET.
2. BACNET ENABLED

EXHAUST FAN SCHEDULE

DESIGNATION	EF M1	EF N1	EF N2
CFM	1860	1650	100
EXT. S.P. (IN. WC)	1.0	0.57	0.28
HP / BHP	1.0 / 0.61	0.5 / 0.34	- / 0.04
VOLTS / PHASE	115/1	115/1	115/1
MCA / MOP (AMPS)	16.2 / 25	8 / 15	1.4 / 15
FLA (AMPS)	13.0	6.4	1.2
RPM	1435	1177	950
TIP SPEED/ SONES	- / 12.8	4506 / 9.8	- / 5
DRIVE	VARI-GREEN	VARI-GREEN	DIRECT
MOUNTING	ROOF	ROOF	CEILING
MANUFACTURER	GREENHECK	GREENHECK	GREENHECK
TYPE	DOWN BLAST	DOWN BLAST	CEILING
MODEL NUMBER	G-140-VG	G-140-VG	SP-A390
CONTROL	EMS	EMS	I.L. W / LIGHTS
LOCATION	MEN / WOMEN	MEN / WOMEN	CUST.
OPER. WT. (LBS)	110	110	35
ACCESSORIES	1 2 3 4 5 6	1 2 3 4 5 6	1, 3, 7

1. BACK DRAFT DAMPER
2. FACTORY SLOPED CURB
3. E.C. MOTOR
4. BIRDSCREEN
5. FACTORY DISCONNECT (FIELD MTD)
6. DIAL ON MOTOR FOR BALANCING
7. FACTORY PROVIDED REGISTER

REGISTERED PROFESSIONAL ENGINEER
RYAN W. CARLSON
No. M34846
Exp. 6-30-28
MECHANICAL
STATE OF CALIFORNIA

LAWRENCE ENGINEERING GROUP
4910 E. Clinton Way, Suite 101
(559) 431-0101
Fresno, CA 93727
FAX (559) 431-1362
25106

PBK
FRESNO, CA
559-448-8400
www.pbk.com

PARLIER HS STADIUM REPLACEMENT

603 3rd Street
Parlier, CA 93648

CLIENT PROJECT NO: 250093
DSA SUBMISSION
DSA APPL. NO. : 02-124002 DSA FILE NO. : 10-H12

PARLIER UNIFIED SCHOOL DISTRICT

CLIENT	
PARLIER UNIFIED SCHOOL DISTRICT	
DATE: YYYY/MM/DD	PROJECT NUMBER: 250093

DRAWING HISTORY

No.	Description	Date

CHECKED BY: Checker
DRAWN BY: Author

MECHANICAL NOTES AND SCHEDULES

MX2.1

19 June 2026 8:47 AM P:\2025\25106 Parlier HS Stadium Replacement\4-Drawings\4 M\MX2.1 - MECHANICAL NOTES AND SCHEDULES.dwg rose

0"

1"

TITLE 24 ACCEPTANCE TESTING TABLE

DESIGNATION		HP N1	HP N2	HP N3	IDU N1
FORM / TITLE	NRCA-MCH-02-A OUTDOOR AIR.	X	X	X	X
	NRCA-MCH-03-A CONSTANT VOLUME SINGLE ZONE HVAC.	X	X	X	X
	NRCA-MCH-04-A AIR DISTRIBUTION DUCT LEAKAGE.				
	NRCA-MCH-05-A AIR ECONOMIZER CONTROLS.	X	X		
	NRCA-MCH-06-A DEMAND CONTROL VENTILATION SYSTEMS.		X		
	NRCA-MCH-07-A SUPPLY FAN VARIABLE FLOW CONTROLS.				
	NRCA-MCH-08-A VALVE LEAKAGE TEST.				
	NRCA-MCH-09-A SUPPLY WATER TEMPERATURE RESET CONTROLS.				
	NRCA-MCH-10-A HYDRONIC SYSTEM VARIABLE FLOW CONTROLS.				
	NRCA-MCH-11-A AUTOMATIC DEMAND SHED CONTROLS.				
	NRCA-MCH-12-A FDD FOR PACKAGED DIRECT EXPANSION UNITS.		X		
	NRCA-MCH-13-A AUTOMATIC FDD FOR AIR HANDLING UNITS AND ZONE TERMINAL UNITS.				
	NRCA-MCH-14-A DISTRIBUTED ENERGY STORAGE DX AC SYSTEMS.				
	NRCA-MCH-15-A THERMAL ENERGY STORAGE (TES) SYSTEM.				
	NRCA-MCH-16-A SUPPLY AIR TEMPERATURE RESET CONTROLS.				
	NRCA-MCH-17-A CONDENSER WATER TEMPERATURE RESET CONTROLS.				
	NRCA-MCH-18-A ENERGY MANAGEMENT CONTROL SYSTEMS.				
	NRCA-MCH-19-A OCCUPANCY SENSOR CONTROLS.				
	NRCA-MCH-20 MULTI-FAMILY VENTILATION.				
	NRCA-MCH-21 MULTI-FAMILY ENVENLOPE LEAKAGE.				
	NRCA-MCH-22-A MF DUCT LEAKAGE.				
	NRCA-MCH-23-A MF HRV/ERV VERIFICATION.				

1. REFER TO TITLE-24 DOCUMENTS FOR ADDITIONAL INFORMATION.
2. NRCA MUST BE SUMBITTED AND COMPLETED BY A CERTIFED ACCEPTANCE TEST TECHNICIAN TO COMPLY WITH CALIFORNIA ENERGY CODE.
3. SUBMIT ACCEPTANCE FORMS TO PROJECT INSPECTOR & MEOR FOR REVIEW.

TITLE 24 ACCEPTANCE TESTING TABLE

DESIGNATION		HP M1	IDU M1	IDU M2	IDU M3
FORM / TITLE	NRCA-MCH-02-A OUTDOOR AIR.	X	X	X	X
	NRCA-MCH-03-A CONSTANT VOLUME SINGLE ZONE HVAC.	X	X	X	X
	NRCA-MCH-04-A AIR DISTRIBUTION DUCT LEAKAGE.				
	NRCA-MCH-05-A AIR ECONOMIZER CONTROLS.				
	NRCA-MCH-06-A DEMAND CONTROL VENTILATION SYSTEMS.				
	NRCA-MCH-07-A SUPPLY FAN VARIABLE FLOW CONTROLS.				
	NRCA-MCH-08-A VALVE LEAKAGE TEST.				
	NRCA-MCH-09-A SUPPLY WATER TEMPERATURE RESET CONTROLS.				
	NRCA-MCH-10-A HYDRONIC SYSTEM VARIABLE FLOW CONTROLS.				
	NRCA-MCH-11-A AUTOMATIC DEMAND SHED CONTROLS.				
	NRCA-MCH-12-A FDD FOR PACKAGED DIRECT EXPANSION UNITS.				
	NRCA-MCH-13-A AUTOMATIC FDD FOR AIR HANDLING UNITS AND ZONE TERMINAL UNITS.				
	NRCA-MCH-14-A DISTRIBUTED ENERGY STORAGE DX AC SYSTEMS.				
	NRCA-MCH-15-A THERMAL ENERGY STORAGE (TES) SYSTEM.				
	NRCA-MCH-16-A SUPPLY AIR TEMPERATURE RESET CONTROLS.				
	NRCA-MCH-17-A CONDENSER WATER TEMPERATURE RESET CONTROLS.				
	NRCA-MCH-18-A ENERGY MANAGEMENT CONTROL SYSTEMS.				
	NRCA-MCH-19-A OCCUPANCY SENSOR CONTROLS.				
	NRCA-MCH-20 MULTI-FAMILY VENTILATION.				
	NRCA-MCH-21 MULTI-FAMILY ENVENLOPE LEAKAGE.				
	NRCA-MCH-22-A MF DUCT LEAKAGE.				
	NRCA-MCH-23-A MF HRV/ERV VERIFICATION.				

1. REFER TO TITLE-24 DOCUMENTS FOR ADDITIONAL INFORMATION.
2. NRCA MUST BE SUMBITTED AND COMPLETED BY A CERTIFED ACCEPTANCE TEST TECHNICIAN TO COMPLY WITH CALIFORNIA ENERGY CODE.
3. SUBMIT ACCEPTANCE FORMS TO PROJECT INSPECTOR & MEOR FOR REVIEW.

PBK
FRESNO, CA
559-448-8400
www.pbk.com

PARLIER HS STADIUM REPLACEMENT

603 3rd Street
Parlier, CA 93648

CLIENT PROJECT NO: 250093

DSA SUBMISSION

DSA APPL. NO. : 02-124002 DSA FILE NO. : 10-H12

PARLIER UNIFIED SCHOOL DISTRICT

CLIENT	
PARLIER UNIFIED SCHOOL DISTRICT	
DATE: YYYY/MM/DD	PROJECT NUMBER: 250093

DRAWING HISTORY

No.	Description	Date

CHECKED BY: Checker

DRAWN BY: Author

BENJAMIN W. GARDNER — No. M34846 — Exp. 6-30-28 — MECHANICAL — STATE OF CALIFORNIA

LAWRENCE ENGINEERING GROUP
4910 E. Clinton Way, Suite 101
(559) 431-0101
25106
Fresno, CA 93727
FAX (559) 431-1562

MECHANICAL NOTES AND SCHEDULES

MX2.2

19 June 2026 8:47 AM P:\2025\25106 Parlier HS Stadium Replacement\4-Drawings\4 M\MX2.1 - MECHANICAL NOTES AND SCHEDULES.dwg rose

Project Name:	25106 Parlier HS Bldg M	Date Prepared:	2026-01-28

A. General Information

1	Project Name	25106 Parlier HS Bldg M			
2	Run Title	Title 24 Analysis			
3	Project Location	603 3rd Street			
4	City	Parlier	5	Standards Version	Compliance 2025
6	Zip code	63648	7	Compliance Software (version)	EnergyPro 10.0
8	Climate Zone	13	9	Building Orientation (deg)	0
10	Building Type(s)	• Nonresidential	11	Weather File	CA_Title24_2025_CZ13_FRESNO-YOSEMITE.epw
12	Project Scope	• New envelope and mechanical	13	Number of Dwelling Units	0
14	Total Conditioned Floor Area in Scope (ft²)	1325	15	Total # of hotel/motel rooms	0
16	Total Unconditioned Floor Area (ft²)	0	17	Fuel Type	Natural gas
18	Is Natural Gas Available per Section 100.1?	Yes	19	Nonresidential Conditioned Floor Area	1325
20	Total # of Stories (Habitable Above-Grade)	1	21	Residential Conditioned Floor Area	0

B. PROJECT SUMMARY

Table B shows which building components are included in the performance calculation. If indicated as not included, the project must show compliance prescriptively if within the permit application.

Building Components Complying via Performance					Building Components Complying Prescriptively		
Envelope (See Table G)	Nonres	Performance	Solar Thermal Water Heating (See Table I3)	☐	Performance	The following building components are ONLY eligible for prescriptive compliance and should be documented on the NRCC form listed if within the scope of the permit application (i.e. compliance will not be shown on the NRCC-PRF-E).	
	MultiFam	Not Included		☒	Not Included		
Mechanical (See Table H)	Nonres	Performance	Covered Process: Commercial Kitchens (see Table J)	☐	Performance	Indoor Lighting ((Unconditioned) 140.6 & 170.2(e)	NRCC-ITI-E is required
	MultiFam	Not Included		☒	Not Included	Outdoor Lighting 140.7 & 170.2(e)	NRCC-LTO-E is required
Domestic Hot Water (See Table I)	Nonres	Not Included	Covered Process: Laboratory Exhaust (see Table J)	☐	Performance	Sign Lighting 140.8 & 170.2(e)	NRCC-LTS-E is required
	MultiFam	Not Included		☒	Not Included	**Building Components Complying with Mandatory Measures**	
Lighting (Indoor Conditioned, see Table K)	Nonres	Not Included	Photovoltaics (see Table F)	☐	Performance	Electrical power systems, commissioning, solar ready, elevator and escalator requirements are mandatory and should be documented on the NRCC form listed if applicable (i.e. compliance will not be shown on the NRCC-PRF-E.)	
	MultiFam	Not Included		☒	Not Included	Electrical Power Distribution 110.11	NRCC-ELC-E is required
			Battery (see Table F)	☐	Performance	Commissioning 120.8	NRCC-CXR-E is required
				☒	Not Included	Solar and Battery 110.10	NRCC-SAB-E is required

C1. COMPLIANCE SUMMARY

	COMPLIES[1]		
	Long-term System Cost (LSC)[1]		Source Energy Use
	Efficiency[2] ($/ft²-yr)	Total[2] ($/ft²-yr)	Total[2] (kBtu/ft²-yr)
Standard Design	147.36	147.36	36.1
Proposed Design	131.96	131.96	34.63
Compliance Margins	**15.4**	**15.4**	**1.47**
	Pass	**Pass**	**Pass**

[1] *Long-term System Cost (LSC) is a 30-year present value cost to California's energy system. LSC is not a predicted utility bill.*
[2] *Efficiency measures include energy efficiency improvements such as better building envelope and more efficient mechanical equipment*
[3] *Compliance Totals include efficiency, photovoltaics and batteries*
[4] *New Construction: Building complies when Proposed Design is equal to or less than Standard Design in all compliance categories and unmet load hour limits are not exceeded. Complete Addition Scope and Existing, Addition and Alteration Scope: Building complies when efficiency compliance margin is greater than or equal to zero and unmet load hour limits are not exceeded.*

C2. LSC ENERGY COMPLIANCE RESULTS FOR PERFORMANCE COMPONENTS (Annual LSC Energy Use, $/ft²-yr)

COMPLIES			
Energy Component	Standard Design (LSC)	Proposed Design (LSC)	Compliance Margin (LSC)[2]
Space Heating	30.34	44.19	-13.85
Space Cooling	47.87	50.65	-2.78
Indoor Fans	55.24	23.21	32.03
Heat Rejection	0	0	0
Pumps & Misc.	0	0	0
Domestic Hot Water	2.27	2.27	0
Indoor Lighting	11.64	11.64	0
Flexibility	---	---	---
EFFICIENCY COMPLIANCE TOTAL	**147.36**	**131.96**	**15.4 (10.5%)**
Photovoltaics	---	---	---
Batteries	---	---	---
TOTAL COMPLIANCE	**147.36**	**131.96**	**15.4 (10.5%)**

[1] *Notes: This number in parenthesis following the Compliance Margin in column 4, represents the Percent Better than Standard.*

C3. LSC ENERGY RESULTS FOR NON-REGULATED COMPONENTS[1]

Non-Regulated Energy Component	Standard Design (LSC)	Proposed Design (LSC)	Compliance Margin (LSC)[2]
Receptacle	156.64	156.64	---
Process	---	---	---
Other Ltg	---	---	---
Process Motors	---	---	---
TOTAL (TOTAL COMPLIANCE + NON-REGULATED COMPONENTS)	**304**	**288.6**	**15.4 (5.1%)**

[1] *Notes: This table is not used for Energy Code Compliance.*
[2] *Notes: This number in parenthesis following the Compliance Margin in column 4, represents the Percent Better than Standard.*

C4. SOURCE ENERGY COMPLIANCE RESULTS FOR PERFORMANCE COMPONENTS (Annual SOURCE Energy Use, kBtu/ft² /yr)

COMPLIES			
Energy Component	Standard Design (SOURCE)	Proposed Design (SOURCE)	Compliance Margin (SOURCE)[2]
Space Heating	13.22	18.24	-5.02
Space Cooling	6.91	7.02	-0.11
Indoor Fans	12.66	6.06	6.6
Heat Rejection	0	0	0
Pumps & Misc.	0	0	0
Domestic Hot Water	0.62	0.62	0
Indoor Lighting	2.69	2.69	0
Flexibility	---	---	---
EFFICIENCY COMPLIANCE TOTAL	**36.1**	**34.63**	**1.47 (4.1%)**
Photovoltaics	---	---	---
Batteries	---	---	---
TOTAL COMPLIANCE	**36.1**	**34.63**	**1.47 (4.1%)**

[1] *Notes: This number in parenthesis following the Compliance Margin in column 4, represents the Percent Better than Standard.*

C5. SOURCE ENERGY RESULTS FOR NON-REGULATED COMPONENTS[1]

Non-Regulated Energy Component	Standard Design (SOURCE)	Proposed Design (SOURCE)	Compliance Margin (SOURCE)[2]
Receptacle	34.04	34.04	---
Process	---	---	---
Other Ltg	---	---	---
Process Motors	---	---	---
TOTAL (TOTAL COMPLIANCE + NON-REGULATED COMPONENTS)	**70.14**	**68.67**	**1.47 (2.1%)**

[1] *Notes: This table is not used for Energy Code Compliance.*
[2] *Notes: This number in parenthesis following the Compliance Margin in column 4, represents the Percent Better than Standard.*

C6. 'ABOVE CODE' QUALIFICATIONS

☐ This project is pursuing CalGreen Tier 1 ☐ This project is pursuing CalGreen Tier 2

C7. ENERGY USE SUMMARY

Energy Component	Standard Design Site (MWh)	Proposed Design Site (MWh)	Margin (MWh)	Standard Design Site (MBtu)	Proposed Design Site (MBtu)	Margin (MBtu)
Space Heating	6.5	9.6	-3.1	---	---	---
Space Cooling	13.4	13.7	-0.3	---	---	---
Indoor Fans	14.1	5.9	8.2	---	---	---
Heat Rejection	---	---	---	---	---	---
Pumps & Misc.	---	---	---	---	---	---
Domestic Hot Water	0.6	0.6	0	---	---	---
Indoor Lighting	3.2	3.2	0	---	---	---
Flexibility	---	---	---	---	---	---
EFFICIENCY TOTAL	**37.8**	**33**	**4.8**	**0**	**0**	**0**
Photovoltaics	---	---	---	---	---	---
Batteries	---	---	---	---	---	---
ENERGY USE SUBTOTAL	**37.8**	**33**	**4.8**	**0**	**0**	**0**
Receptacle	44.1	44.1	0	---	---	---
Process	---	---	---	---	---	---
Other Ltg	---	---	---	---	---	---
Process Motors	---	---	---	---	---	---
ENERGY USE TOTAL	**81.9**	**77.1**	**4.8**	**0**	**0**	**0**

C8. ENERGY USE INTENSITY (EUI)

	Standard Design (kBtu/ft² / yr)	Proposed Design (kBtu/ft² / yr)	Margin (kBtu/ft² / yr)	Margin Percentage
GROSS EUI[1]	210.9	198.54	12.36	5.86
NET EUI[1]	210.9	198.54	12.36	5.86

[1] *Notes: Gross EUI is Energy Use Total (not including PV)/Total Building Area. Net EUI is Energy Use Total (including PV)/Total Building Area.*

D1. EXCEPTIONAL CONDITIONS

• The building does not include service water heating. Verify that service water heating is not required and is not included in the design.
• The user model includes space(s) that are designed to be served by mechanical cooling systems, but the cooling systems were not included in the simulation model. A cooling system has been modeled for both the proposed and standard cases.
• The user model includes space(s) without sufficient cooling equipment. Cooling equipment has been added to the model to meet cooling loads.
• Project is claiming Exception 2 to Section 140.1(b)2: No PV system is required where the required PV system size is less than 4 kWdc.
• PV/Battery Building Type has been modified from software defaults for one or more spaces. Review project's PV/Battery Building Type(s) with documentation author. Refer to Energy Code section 140.10 for Nonresidential or 170.2(g) for more information.
• Verify project meets the requirements for Vestibules as per Section 120.7(e).

G1. ENVELOPE GENERAL INFORMATION (conditioned spaces only)

01 Opaque Surfaces & Orientation	02 Total Gross Surface Area (ft²)	03 Total Fenestration Area (ft²)	04 Window to Wall Ratio (%)
West-Facing[4]	1144	0	0
Total	**1071**	**14.19**	**1.32**
South-Facing[3]	420	66.99	15.95

Notes
[1] *North-Facing is oriented to within 45 degrees of true north, including 4500'00" east of north (NE), but excluding 4500'00" west of north (NW),*
[2] *East-Facing is oriented to within 45 degrees of true east, including 4500'00" south of east (SE), but excluding 4500'00" north of east (NE),*
[3] *South-Facing is oriented to within 45 degrees of true south, including 4500'00" west of south (SW), but excluding 4500'00" east of south (SE),*
[4] *West-Facing is oriented to within 45 degrees of true west, including 4500'00" north of west (NW), but excluding 4500'00" south of west (SW),*

G1. ENVELOPE GENERAL INFORMATION (conditioned spaces only)

01 Opaque Surfaces & Orientation	02 Total Gross Surface Area (ft²)	03 Total Fenestration Area (ft²)	04 Window to Wall Ratio (%)
West-Facing[4]	1144	0	0
Total	**2713**	**81.18**	**2.99**
Roof	1325	0	0

Notes
[1] *North-Facing is oriented to within 45 degrees of true north, including 4500'00" east of north (NE), but excluding 4500'00" west of north (NW),*
[2] *East-Facing is oriented to within 45 degrees of true east, including 4500'00" south of east (SE), but excluding 4500'00" north of east (NE),*
[3] *South-Facing is oriented to within 45 degrees of true south, including 4500'00" west of south (SW), but excluding 4500'00" east of south (SE),*
[4] *West-Facing is oriented to within 45 degrees of true west, including 4500'00" north of west (NW), but excluding 4500'00" south of west (SW),*

G4. NONRESIDENTIAL AIR BARRIER

01 Building Story Name	02 Air Barrier
Com-Floor 1	No air barrier

G5. OPAQUE SURFACE ASSEMBLY SUMMARY

01 Surface Name	02 Construction Type	03 Area (ft²)	04 Framing Type	05 Cavity R-Value	06 Continuous R-Value Interior	06 Continuous R-Value Exterior	07 Units	08 Value	09 Description of Assembly Layers	10 Status[1]
25106 Exterior Wall7	Exterior Wall	2,713	Wood	19	N/A	N/A	U-factor	0.0716	Stucco - 7/8 in. Vapor permeable felt - 1/8 in. Composite-1 Gypsum Board - 5/8 in.	N
Slab On Grade16	Underground Floor	1,325	N/A	0	N/A	N/A	F-factor	0.73	Slab Type =Unheated slab on grade Insulation Orientation =None Insulation R-Value =none	N
25106 Roof18	Roof	1,325	N/A	0	N/A	29.34	U-factor	0.0307	Built-up roofing - 3/8 in. Vapor permeable felt - 1/8 in. Plywood - 1/2 in. Cellular polyisocyanurate (unfaced) - 5 in. R29 Air - Cavity - Wall Roof Ceiling - 4 in. or more Gypsum Board - 5/8 in.	N

[1] *Status: N - New, A - Altered, E - Existing*

G6A. OPAQUE DOOR SUMMARY (NONRESIDENTIAL)

01 Assembly Name	02 Area (ft²)	03 Overall U-factor	04 Status[1]
25106 HM Door9	126	0.7	N

[1] *Status: N - New, A - Altered, E - Existing*

G7A. FENESTRATION ASSEMBLY SUMMARY (NONRESIDENTIAL)

01 Fenestration Assembly Name	02 Fenestration Type/ Product Type / Frame Type	03 Certification Method[2]	04 Assembly Method	05 Area (ft²)	06 Overall U-factor	07 Overall SHGC	08 Overall VT	09 Status[1]
25106 Window	Vertical fenestration Fixed window N/A	NFRC	Manufactured	81.18	0.34	0.22	0.42	N

[1] *Notes: Newly installed fenestration shall have a certified NFRC Label Certificate or use the CEC default tables found in Table 110.6-A and Table 110.6-B. Center of Glass (COG) values are for the glass-only, determined by the manufacturer, and are shown for ease of verification. Site-built fenestration values are calculated per Nonresidential Appendix NA6 and are used in the analysis.*
[2] *Status: N - New, A - Altered, E - Existing*

H1. DRY SYSTEM EQUIPMENT (FURNACES, AIR HANDLING UNITS, HEAT PUMPS, VRF, ECONOMIZERS ETC.)

01	02	03	04	05	06	07	08	09	10	11	12
			Heating				Cooling				
Equipment Name	Equipment Type	Qty	Total Heating Output (kBtu/h)	Supp Heat Output (kBtu/h)	Efficiency Unit	Efficiency	Total Cooling Output (kBtu/h)	Efficiency Unit	Efficiency	Economizer Type (if present)	Status[1]
IDU-M1 Carrier 45M8CAQ18X	Single Zone Heat Pump (SZHP) Air System	1	17.29	0	HSPF2	11.4	14.11	EER2 SEER2	12.5 20.8	No Economizer	N
HP-M1 AAON RN-008-3-O-GBB	Single Zone Heat Pump (SZHP) Air System	1	79.57	0	COP	3.4	88.04	EER	11.4	No Economizer	N
IDU-M2 Carrier 45M8CAQ18X	Single Zone Heat Pump (SZHP) Air System	1	17.29	0	HSPF2	11.4	14.11	EER2 SEER2	12.5 20.8	No Economizer	N

[1] *Status: N - New, A - Altered, E - Existing*

H1. DRY SYSTEM EQUIPMENT (FURNACES, AIR HANDLING UNITS, HEAT PUMPS, VRF, ECONOMIZERS ETC.)

01	02	03	04	05	06	07	08	09	10	11	12
			Heating				Cooling				
Equipment Name	Equipment Type	Qty	Total Heating Output (kBtu/h)	Supp Heat Output (kBtu/h)	Efficiency Unit	Efficiency	Total Cooling Output (kBtu/h)	Efficiency Unit	Efficiency	Economizer Type (if present)	Status[1]
IDU-M3 Carrier 45M4HAQ24X	Single Zone Heat Pump (SZHP) Air System	1	23.85	0	HSPF2	11.7	24	EER2 SEER2	14 23.1	No Economizer	N

[1] *Status: N - New, A - Altered, E - Existing*

H3. NONRESIDENTIAL / COMMON USE AREA FAN SYSTEMS SUMMARY

01	02	03	04	05	06	07	08	09	10	11	12	13
			Supply Fan				Return / Relief Fan					
Name or Item Tag	Qty	Design OA CFM	CFM	Power	Power Units	Control	Fan Type	CFM	Power	Power Units	Control	Status[1]
IDU-M1 Carrier 45M8CAQ18X	1	43.86	385	0.1	BHP	Constant Vol	N/A	N/A	N/A	N/A	N/A	N
HP-M1 AAON RN-008-3-O-GBB	1	76.5	1,650	0.65	BHP	Constant Vol	N/A	N/A	N/A	N/A	N/A	N
IDU-M2 Carrier 45M8CAQ18X	1	21.16	385	0.1	BHP	Constant Vol	N/A	N/A	N/A	N/A	N/A	N
IDU-M3 Carrier 45MAHAQ24X	1	7.5	618	0.1	BHP	Constant Vol	N/A	N/A	N/A	N/A	N/A	N

01	14	15	16	17	18	19
	Supply Fan			Return / Relief Fan		
Name or Item Tag	Modeling Method	Fan Efficiency	Motor Efficiency	Modeling Method	Fan Efficiency	Motor Efficiency
IDU-M1 Carrier 45M8CAQ18X	Brake Horse Power	0.65	0.86	N/A	N/A	N/A
HP-M1 AAON RN-008-3-O-GBB	Brake Horse Power	0.65	0.86	N/A	N/A	N/A
IDU-M2 Carrier 45M8CAQ18X	Brake Horse Power	0.65	0.86	N/A	N/A	N/A
IDU-M3 Carrier 45MAHAQ24X	Brake Horse Power	0.65	0.86	N/A	N/A	N/A

[1] *Status: N - New, A - Altered, E - Existing*

H5. GENERAL EXHAUST FAN SUMMARY

01 System ID	02 Zone Name	03 Qty	04 CFM	05 Power	06 Power Units	07 Continuous Operation?	08 Status[1]
Zone 11-EF	1-Zone 1	1	30	0.03	BHP	No	N
Zone 219-EF	2-Zone 2	1	1800	0.18	BHP	No	N
Zone 340-EF	3-Zone 3	1	30	0.03	BHP	No	N

[1] *Status: N - New, A - Altered, E - Existing*

H8. NONRESIDENTIAL / COMMON USE AREA & HOTEL/MOTEL VENTILATION

01	02	03	04	05	06	07
		Mechanical Ventilation				
Zone Name	Ventilation Function	# of People	Supply OA CFM	Exhaust CFM	Conditioned Area (sf)	DCV or Occupant Sensor Controls, or Both
1-Zone 1	Retail - Sales	2.92	43.86	30	172	N/A
2-Zone 2	Exhaust - Toilets, public	5.1	76.5	1800	1020	N/A
3-Zone 3	Retail - Sales	1.41	21.16	30	83	N/A
4-Zone 4	Misc - All others	0.25	7.5	0	50	N/A

H11. ZONAL SYSTEM AND TERMINAL UNIT SUMMARY

01 System ID	02 System Type	03 Qty	04 Rated Capacity (kBtu/h) Heating	05 Rated Capacity (kBtu/h) Cooling	06 Airflow (cfm) Design	07 Airflow (cfm) Min.	08 Min. Ratio	09 Fan Power	10 Fan Power Units	11 Fan Cycles	12 VSD
1-Zone 1-Trm	Uncontrolled	1	N/A	N/A	385	N/A	0	N/A	N/A	N/A	☐
2-Zone 2-Trm	Uncontrolled	1	N/A	N/A	1,650	N/A	0	N/A	N/A	N/A	☐
3-Zone 3-Trm	Uncontrolled	1	N/A	N/A	385	N/A	0	N/A	N/A	N/A	☐
4-Zone 4-Trm	Uncontrolled	1	N/A	N/A	618	N/A	0	N/A	N/A	N/A	☐

N. DECLARATION OF REQUIRED CERTIFICATES OF INSTALLATION

Selections made by Documentation Author indicate which Certificates of Installation must be submitted for the features to be recognized for compliance. These documents must be retained and provided to the building inspector during construction and can be found online

Building Component	Form/Title
Envelope	NRCI-ENV-E - Envelope (for all buildings)
Mechanical	NRCI-MCH-E - For all buildings with Mechanical Systems

O. DECLARATION OF REQUIRED CERTIFICATES OF ACCEPTANCE

Selections made by Documentation Author indicate which Certificates of Acceptance must be submitted for the features to be recognized for compliance. These documents must be provided to the building inspector during construction. Lighting controls and mechanical NRCAs must be completed through an Acceptance Test Technician Certification Provider (ATCP).

Building Component [1]	Form/Title & System Name(s)
Envelope	NRCA-ENV-02-F - NRFC label verification for fenestration
Mechanical	NRCA-MCH-02-A - Outdoor Air must be submitted for all newly installed HVAC units. Note: MCH-02-A can be performed in conjunction with MCH-07-A Supply Fan VFD Acceptance (if applicable) since testing activities overlap IDU-M1 Carrier 45M8CAQ18X, HP-M1 AAON RN-008-3-O-GBB, IDU-M2 Carrier 45M8CAQ18X and IDU-M3 Carrier 45MAHAQ24X.
Mechanical	NRCA-MCH-03-A - Constant Volume Single Zone HVAC IDU-M1 Carrier 45M8CAQ18X, HP-M1 AAON RN-008-3-O-GBB, IDU-M2 Carrier 45M8CAQ18X and IDU-M3 Carrier 45MAHAQ24X.

[1] *Refer to other prescriptive NRCC forms applicable to the project for additional NRCA tests required that are not included in the NRCC-PRF-E form*

P. DECLARATION OF REQUIRED CERTIFICATES OF VERIFICATION

Selections made by Documentation Author indicate which Certificates of Verification must be submitted for the features to be recognized for compliance. These documents must be retained and provided to the building inspector during construction and can be found online

There are no certificates applicable to this project

PARLIER HS STADIUM REPLACEMENT
603 3rd Street
Parlier, CA 93648
CLIENT PROJECT NO: 250093
DSA SUBMISSION DSA APPL. NO.: 02-124002 DSA FILE NO.: 10-H12
PARLIER UNIFIED SCHOOL DISTRICT
PBK
www.pbk.com
559-448-8400
FRESNO, CA
CLIENT
PARLIER UNIFIED SCHOOL DISTRICT
DATE YYYY/MM/DD
PROJECT NUMBER 250093
DRAWING HISTORY
No. | Description | Date
CHECKED BY: Checker
DRAWN BY: Author
REGISTERED PROFESSIONAL ENGINEER JOHN W. EARLOUGH No. M34846 Exp. 6-30-28 MECHANICAL STATE OF CALIFORNIA
LAWRENCE ENGINEERING GROUP
4910 E. Clinton Way, Suite 101 (559) 431-0101
Fresno, CA 93727 FAX (559) 431-1362
25106

MECHANICAL
BUILDING M T-24

MX3.1

19 June 2026 8:47 AM P:\2025\25106 Parlier HS Stadium Replacement\4-Drawings\4 WORK\3.1-MX3.6 – MECHANICAL T-24.dwg rose

19 June 2026 8:47 AM P:\2025\25106 Parlier HS Stadium Replacement\4-Drawings\4 M\MX3.1-MX3.6 - MECHANICAL T-24.dwg rose

CERTIFICATE OF COMPLIANCE - NONRESIDENTIAL PRESCRIPTIVE COMPLIANCE METHOD

NRCC-PRC-E

Nonresidential Prescriptive Compliance Method

(Page 3 of 31)

Documentation Author's Declaration Statement

I certify that the following person is the documentation author responsible for the documentation in this plan set and compliance documentation:

Documentation Author Name: Matthew Allaire

Company: Lawrence Engineering Group

Address: 4910 East Clinton Way Suite 101

City/State/Zip: Fresno, CA 93727

Phone: (559) 431-0101

Documentation Author Signature: Matthew Allaire

Signature date: 2026-01-28

Documentation Author Title: Mechanical Engineer

Documentation Author Identification (if applicable):

Responsible Person's Declaration statement

I certify that the following person is responsible for the design of the systems or components specified on this Certificate of Compliance:

1. The information provided on this Certificate of Compliance is true and correct.
2. I am eligible under Division 3 of the Business and Professions Code to accept responsibility for the building design or system design identified on this Certificate of Compliance. My responsibility for the building design or system design identified on this Certificate of Compliance does not include the acceptance of responsibility for building construction or compliance with the mandatory requirements or the prescriptive, performance or compliance approach requirements of the California Energy Standards for the building design or system design identified on this Certificate of Compliance which are not within my responsibility to verify.
3. The building design features or system design features identified on this Certificate of Compliance are consistent with the information provided on other applicable components of the building design and compliance documentation, including but not limited to, the Mandatory Measures, Compliance Manual, Compliance Forms and Worksheets, plans and specifications.
4. The building design features or system design features identified on this Certificate of Compliance are consistent with the information provided on other applicable components of the building design and compliance documentation, including but not limited to, the Mandatory Measures, Compliance Manual, Compliance Forms and Worksheets, plans and specifications.
5. I understand that a completed signed copy of this Certificate of Compliance shall be made available with the building permit(s) issued for the building and shall be made available to the building owner or his/her agent, building operator, building maintenance personnel, and to the enforcement agency upon request.
6. I understand that a completed signed copy of this Certificate of Compliance is required to be included with the documentation the builder provides to the building owner or his/her agent, building operator, building maintenance personnel, and to the enforcement agency upon request.

Responsible Designer Name: Michael Dickson

Company: PBK

Address: 7700 N. First Ave. Ste 101

City/State/Zip: Fresno, CA 93711

Phone: 559-448-8400

Title: Senior Mechanical Engineer

Responsible Designer Signature: Michael Dickson

Date Signed: 2026-01-28

Company: Lawrence Engineering Group

Address: 4910 East Clinton Way Suite 101

City/State/Zip: Fresno, CA 93727

Phone: (559) 431-0101

Title: Mechanical Engineer

Date Signed: 2026-01-28

License #: M34846

Exp. 6-30-28

CA Building Energy Efficiency Standards - 2025 Nonresidential Compliance

Report Version: 2025.0.000

Schema Version: rev 20250201

Report Generated: 2026-01-28 09:30:05

Compliance ID: Energy-Pro-2025-25106-0001

LAWRENCE ENGINEERING GROUP

4910 E. Clinton Way, Suite 101

Fresno, CA 93727

(559) 431-0101 Fax: (559) 431-1342

25106

REGISTERED PROFESSIONAL ENGINEER

RYAN W. CHADE

No. M34846

Exp. 6-30-28

MECHANICAL

STATE OF CALIFORNIA

CLIENT

PARLIER UNIFIED SCHOOL DISTRICT

DATE

YYYY/MM/DD

PROJECT NUMBER

250093

DRAWING HISTORY

No.	Description	Date

CHECKED BY: Checker

DRAWN BY: Author

MECHANICAL

BUILDING M T-24

MX3.2

PARLIER UNIFIED SCHOOL DISTRICT

PARLIER HS STADIUM REPLACEMENT

603 3rd Street

Parlier, CA 93648

CLIENT PROJECT NO: 250093

DSA SUBMISSION

DSA APPL. NO. : 02-124002 DSA FILE NO. : 10-H12

PBK

FRESNO, CA | 559-448-8400 | www.pbk.com

0"

1"

CERTIFICATE OF COMPLIANCE - NONRESIDENTIAL PERFORMANCE COMPLIANCE METHOD — NRCC-PRF-E

Nonresidential Performance Compliance Method (Page 1 of 19)

Project Name: 25106 Parlier HS Bldg N | Date Prepared: 2026-05-13

A. General Information

1	Project Name	25106 Parlier HS Bldg N			
2	Run Title	Title 24 Analysis			
3	Project Location	603 3rd Street			
4	City	Parlier	5	Standards Version	Compliance 2025
6	Zip code	63648	7	Compliance Software (version)	EnergyPro 10.0
8	Climate Zone	13	9	Building Orientation (deg)	90
10	Building Type(s)	• Nonresidential	11	Weather File	CA_Title24_2025_CZ13_FRESNO-YOSEMITE.epw
12	Project Scope	• New envelope and mechanical	13	Number of Dwelling Units	0
14	Total Conditioned Floor Area in Scope (ft^2)	2875	15	Total # of hotel/motel rooms	0
16	Total Unconditioned Floor Area (ft^2)	55	17	Fuel Type	Natural gas
18	Is Natural Gas Available per Section 100.1?	Yes	19	Nonresidential Conditioned Floor Area	2875
20	Total # of Stories (Habitable Above Grade)	1	21	Residential Conditioned Floor Area	0

CERTIFICATE OF COMPLIANCE - NONRESIDENTIAL PERFORMANCE COMPLIANCE METHOD — NRCC-PRF-E

Nonresidential Performance Compliance Method (Page 2 of 19)

B. PROJECT SUMMARY

Table B shows which building components are included in the performance calculation. If indicated as not included, the project must show compliance prescriptively if within the permit application.

Building Components Complying via Performance						Building Components Complying Prescriptively	
Envelope (See Table G)	Nonres	Performance	Solar Thermal Water Heating (See Table I3)	☐	Performance	The following building components are ONLY eligible for prescriptive compliance and should be documented on the NRCC form listed if within the scope of the permit application (i.e. compliance will not be shown on the NRCC-PRF-E).	
	MultiFam	Not Included		☒	Not Included		
Mechanical (See Table H)	Nonres	Performance	Covered Process: Commercial Kitchens (see Table J)	☐	Performance	Indoor Lighting (Unconditioned) 140.6 & 170.2(e)	NRCC-LTI-E is required
	MultiFam	Not Included		☒	Not Included	Outdoor Lighting 140.7 & 170.2(e)	NRCC-LTO-E is required
Domestic Hot Water (See Table I)	Nonres	Performance	Covered Process: Laboratory Exhaust (see Table J)	☐	Performance	Sign Lighting 140.8 & 170.2(e)	NRCC-LTS-E is required
	MultiFam	Not Included		☒	Not Included	**Building Components Complying with Mandatory Measures**	
Lighting (Indoor Conditioned, see Table K)	Nonres	Not Included	Photovoltaics (see Table F)	☒	Performance	Electrical power systems, commissioning, solar ready, elevator and escalator requirements are mandatory and should be documented on the NRCC form listed if applicable (i.e. compliance will not be shown on the NRCC-PRF-E.)	
	MultiFam	Not Included		☐	Not Included	Electrical Power Distribution 110.11	NRCC-ELC-E is required
			Battery (see Table F)	☐	Performance	Commissioning 120.8	NRCC-CXR-E is required
				☒	Not Included	Solar and Battery 110.10	NRCC-SAB-E is required

CERTIFICATE OF COMPLIANCE - NONRESIDENTIAL PERFORMANCE COMPLIANCE METHOD — NRCC-PRF-E

Nonresidential Performance Compliance Method (Page 3 of 19)

C1. COMPLIANCE SUMMARY

COMPLIES*

	Long-term System Cost (LSC)[1]		Source Energy Use
	Efficiency[2] ($/ft^2-yr)	Total[3] ($/ft^2-yr)	Total[3] (kBtu/ft^2-yr)
Standard Design	99.72	87.16	53.15
Proposed Design	94.3	80.62	24.39
Compliance Margins	**5.42**	**6.54**	**28.76**
	Pass	Pass	Pass

[1] Long-term System Cost (LSC) is a 30-year present value cost to California's energy system. LSC is not a predicted utility bill.
[2] Efficiency measures include energy efficiency improvements such as better building envelope and more efficient mechanical equipment
[3] Compliance Totals include efficiency, photovoltaics and batteries
** New Construction: Building complies when Proposed Design is equal to or less than Standard Design in all compliance categories and unmet load hour limits are not exceeded. Complete Addition Scope and Existing, Addition and Alteration Scope: Building complies when efficiency compliance margin is greater than or equal to zero and unmet load hour limits are not exceeded.*

CERTIFICATE OF COMPLIANCE - NONRESIDENTIAL PERFORMANCE COMPLIANCE METHOD — NRCC-PRF-E

Nonresidential Performance Compliance Method (Page 4 of 19)

C2. LSC ENERGY COMPLIANCE RESULTS FOR PERFORMANCE COMPONENTS (Annual LSC Energy Use, $/ft^2-yr)

COMPLIES

Energy Component	Standard Design (LSC)	Proposed Design (LSC)	Compliance Margin (LSC)[1]
Space Heating	25.58	26.76	-1.18
Space Cooling	23.83	30.28	-6.45
Indoor Fans	36.74	23.8	12.94
Heat Rejection	0	0	0
Pumps & Misc.	0	0	0
Domestic Hot Water	0.67	0.56	0.11
Indoor Lighting	12.9	12.9	0
Flexibility	---	---	---
EFFICIENCY COMPLIANCE TOTAL	**99.72**	**94.3**	**5.42 (5.4%)**
Photovoltaics	-12.56	-13.68	1.12
Batteries	---	---	---
TOTAL COMPLIANCE	**87.16**	**80.62**	**6.54 (7.5%)**

[1] Notes: This number in parenthesis following the Compliance Margin in column 4, represents the Percent Better than Standard.

CERTIFICATE OF COMPLIANCE - NONRESIDENTIAL PERFORMANCE COMPLIANCE METHOD — NRCC-PRF-E

Nonresidential Performance Compliance Method (Page 5 of 19)

C3. LSC ENERGY RESULTS FOR NON-REGULATED COMPONENTS[1]

Non-Regulated Energy Component	Standard Design (LSC)	Proposed Design (LSC)	Compliance Margin (LSC)[2]
Receptacle	54.29	54.29	---
Process	---	---	---
Other Ltg	0.13	0.13	---
Process Motors	0.38	0.38	---
TOTAL (TOTAL COMPLIANCE + NON-REGULATED COMPONENTS)	**141.96**	**135.42**	**6.54 (4.6%)**

[1] Notes: This table is not used for Energy Code Compliance.
[2] Notes: This number in parenthesis following the Compliance Margin in column 4, represents the Percent Better than Standard.

CERTIFICATE OF COMPLIANCE - NONRESIDENTIAL PERFORMANCE COMPLIANCE METHOD — NRCC-PRF-E

Nonresidential Performance Compliance Method (Page 6 of 19)

C4. SOURCE ENERGY COMPLIANCE RESULTS FOR PERFORMANCE COMPONENTS (Annual SOURCE Energy Use, kBtu/ft^2 /yr)

COMPLIES

Energy Component	Standard Design (SOURCE)	Proposed Design (SOURCE)	Compliance Margin (SOURCE)[1]
Space Heating	38.39	10.98	27.41
Space Cooling	3.49	4.33	-0.84
Indoor Fans	9.1	6.28	2.82
Heat Rejection	0	0	0
Pumps & Misc.	0	0	0
Domestic Hot Water	0.19	0.95	-0.76
Indoor Lighting	3.37	3.37	0
Flexibility	---	---	---
EFFICIENCY COMPLIANCE TOTAL	**54.54**	**25.91**	**28.63 (52.5%)**
Photovoltaics	-1.39	-1.52	0.13
Batteries	---	---	---
TOTAL COMPLIANCE	**53.15**	**24.39**	**28.76 (54.1%)**

[1] Notes: This number in parenthesis following the Compliance Margin in column 4, represents the Percent Better than Standard.

CERTIFICATE OF COMPLIANCE - NONRESIDENTIAL PERFORMANCE COMPLIANCE METHOD — NRCC-PRF-E

Nonresidential Performance Compliance Method (Page 7 of 19)

C5. SOURCE ENERGY RESULTS FOR NON-REGULATED COMPONENTS[1]

Non-Regulated Energy Component	Standard Design (SOURCE)	Proposed Design (SOURCE)	Compliance Margin (SOURCE)[2]
Receptacle	13.44	13.44	---
Process	---	---	---
Other Ltg	0.04	0.04	---
Process Motors	0.1	0.1	---
TOTAL (TOTAL COMPLIANCE + NON-REGULATED COMPONENTS)	**66.73**	**37.97**	**28.76 (43.1%)**

[1] Notes: This table is not used for Energy Code Compliance.
[2] Notes: This number in parenthesis following the Compliance Margin in column 4, represents the Percent Better than Standard.

C6. 'ABOVE CODE' QUALIFICATIONS

☐ This project is pursuing CalGreen Tier 1 ☐ This project is pursuing CalGreen Tier 2

CERTIFICATE OF COMPLIANCE - NONRESIDENTIAL PERFORMANCE COMPLIANCE METHOD — NRCC-PRF-E

Nonresidential Performance Compliance Method (Page 8 of 19)

C7. ENERGY USE SUMMARY

Energy Component	Standard Design Site (MWh)	Proposed Design Site (MWh)	Margin (MWh)	Standard Design Site (MBtu)	Proposed Design Site (MBtu)	Margin (MBtu)
Space Heating	---	12.7	---	121.9	---	---
Space Cooling	12.9	15.9	-3	---	---	---
Indoor Fans	19.7	12.8	6.9	---	---	---
Heat Rejection	---	---	---	---	---	---
Pumps & Misc.	---	---	---	---	---	---
Domestic Hot Water	0.3	---	---	---	3	---
Indoor Lighting	7	7	0	---	---	---
Flexibility	---	---	---	---	---	---
EFFICIENCY TOTAL	**39.9**	**48.4**	**-8.5**	**121.9**	**3**	**118.9**
Photovoltaics	-9	-9.8	0.8	---	---	---
Batteries	---	---	---	---	---	---
ENERGY USE SUBTOTAL	**30.9**	**38.6**	**-7.7**	**121.9**	**3**	**118.9**
Receptacle	30.8	30.8	0	---	---	---
Process	---	---	---	---	---	---
Other Ltg	0.1	0.1	0	---	---	---
Process Motors	0.2	0.2	0	---	---	---
ENERGY USE TOTAL	**62**	**69.7**	**-7.7**	**121.9**	**3**	**118.9**

CERTIFICATE OF COMPLIANCE - NONRESIDENTIAL PERFORMANCE COMPLIANCE METHOD — NRCC-PRF-E

Nonresidential Performance Compliance Method (Page 9 of 19)

C8. ENERGY USE INTENSITY (EUI)

	Standard Design (kBtu/ft^2 / yr)	Proposed Design (kBtu/ft^2 / yr)	Margin (kBtu/ft^2 / yr)	Margin Percentage
GROSS EUI[1]	124.28	93.6	30.68	24.69
NET EUI[1]	113.8	82.19	31.61	27.78

[1] Notes: Gross EUI is Energy Use Total (not including PV)/Total Building Area. Net EUI is Energy Use Total (including PV)/Total Building Area.

D1. EXCEPTIONAL CONDITIONS

• PV/Battery Building Type has been modified from software defaults for one or more spaces. Review project's PV/Battery Building Type(s) with documentation author. Refer to Energy Code section 140.10 for Nonresidential or 170.2(g) for more information.
• Verify project meets the requirements for Vestibules as per Section 120.7(e).

F1. REQUIRED PV SYSTEMS

01	02	03	04	05	06	07	08	09	10	11	12
DC System Size (kWdc)	Exception[1]	Module Type	Array Type	Power Electronics	CFI	Azimuth (deg)	Tilt Input	Array Angle (deg)	Tilt: (x in 12)	Inverter Eff. (%)	Annual Solar Access (%)
6		Standard (14-17%)	Fixed	none	false	180	Degrees	22	4.85	96	100

[1] See Table D1 for any PV exceptions used.

CERTIFICATE OF COMPLIANCE - NONRESIDENTIAL PERFORMANCE COMPLIANCE METHOD — NRCC-PRF-E

Nonresidential Performance Compliance Method (Page 10 of 19)

F1B. PV BATTERY BUILDING TYPE(S)

01	02	03
Building Occupancy Type* (From Table 140.10-A/B and 170.2-U/V)	Conditioned Floor Area (ft^2)	Unconditioned Floor Area (ft^2)
Events and Exhibits	0	0
Library	0	0
Hotel/Motel	0	0
Office, Financial Institutions, Unleased Tenant Space, Medical Office Building/Clinic	0	0
Restaurants	0	0
Retail, Grocery	447	0
School	2428	55
Warehouse	0	0
Religious Worship	0	0
Sports and Recreation	0	0
Multifamily greater than 3 stories	0	0
None	0	0

**Building Occupancy Types are defined in Section 100.1 of the Energy Code*

G1. ENVELOPE GENERAL INFORMATION (conditioned spaces only)

01	02	03	04
Opaque Surfaces & Orientation	Total Gross Surface Area (ft^2)	Total Fenestration Area (ft^2)	Window to Wall Ratio (%)
North-Facing[1]	625	36	5.76
East-Facing[2]	1091	36	3.3
South-Facing[3]	520	0	0

Notes
[1] North-Facing is oriented to within 45 degrees of true north, including 4500'00" east of north (NE), but excluding 4500'00" west of north (NW),
[2] East-Facing is oriented to within 45 degrees of true east, including 4500'00" south of east (SE), but excluding 4500'00" north of east (NE),
[3] South-Facing is oriented to within 45 degrees of true south, including 4500'00" west of south (SW), but excluding 4500'00" east of south (SE),
[4] West-Facing is oriented to within 45 degrees of true west, including 4500'00" north of west (NW), but excluding 4500'00" south of west (SW),

CERTIFICATE OF COMPLIANCE - NONRESIDENTIAL PERFORMANCE COMPLIANCE METHOD — NRCC-PRF-E

Nonresidential Performance Compliance Method (Page 11 of 19)

G1. ENVELOPE GENERAL INFORMATION (conditioned spaces only)

01	02	03	04
Opaque Surfaces & Orientation	Total Gross Surface Area (ft^2)	Total Fenestration Area (ft^2)	Window to Wall Ratio (%)
West-Facing[4]	1166	36	3.09
Total	**3402**	**108**	**3.17**
Roof	2875	0	0

Notes
[1] North-Facing is oriented to within 45 degrees of true north, including 4500'00" east of north (NE), but excluding 4500'00" west of north (NW),
[2] East-Facing is oriented to within 45 degrees of true east, including 4500'00" south of east (SE), but excluding 4500'00" north of east (NE),
[3] South-Facing is oriented to within 45 degrees of true south, including 4500'00" west of south (SW), but excluding 4500'00" east of south (SE),
[4] West-Facing is oriented to within 45 degrees of true west, including 4500'00" north of west (NW), but excluding 4500'00" south of west (SW),

G4. NONRESIDENTIAL AIR BARRIER

01	02
Building Story Name	Air Barrier
Com-Floor 1	No air barrier

CERTIFICATE OF COMPLIANCE - NONRESIDENTIAL PERFORMANCE COMPLIANCE METHOD — NRCC-PRF-E

Nonresidential Performance Compliance Method (Page 12 of 19)

G5. OPAQUE SURFACE ASSEMBLY SUMMARY

01	02	03	04	05	06		07	08	09	10
Surface Name	Construction Type	Area (ft^2)	Framing Type	Cavity R-Value	Continuous R-Value		Units	Value	Description of Assembly Layers	Status[1]
					Interior	Exterior				
25106 Exterior Wall8	Exterior Wall	3,634	Wood	19	N/A	N/A	U-factor	0.0716	Stucco - 7/8 in. Vapor permeable felt - 1/8 in. Composite-1 Gypsum Board - 5/8 in.	N
25106 Roof17	Roof	2,930	N/A	0	N/A	29.34	U-factor	0.0307	Built-up roofing - 3/8 in. Vapor permeable felt - 1/8 in. Plywood - 1/2 in. Cellular polyisocyanurate (unfaced) - 5 in. R29 Air - Cavity - Wall Roof Ceiling - 4 in. or more Gypsum Board - 5/8 in.	N
Slab On Grade19	Underground Floor	2,930	N/A	0	N/A	N/A	F-factor	0.73	Slab Type =Unheated slab on grade Insulation Orientation =None Insulation R-Value =none	N

[1] Status: N - New, A - Altered, E - Existing

G6A. OPAQUE DOOR SUMMARY (NONRESIDENTIAL)

01	02	03	04
Assembly Name	Area (ft^2)	Overall U-factor	Status[1]
Metal Door11	231	0.7	N

[1] Status: N - New, A - Altered, E - Existing

CERTIFICATE OF COMPLIANCE - NONRESIDENTIAL PERFORMANCE COMPLIANCE METHOD — NRCC-PRF-E

Nonresidential Performance Compliance Method (Page 13 of 19)

G7A. FENESTRATION ASSEMBLY SUMMARY (NONRESIDENTIAL)

01	02	03	04	05	06	07	08	09
Fenestration Assembly Name	Fenestration Type/ Product Type / Frame Type	Certification Method[1]	Assembly Method	Area (ft^2)	Overall U-factor	Overall SHGC	Overall VT	Status[2]
25106 Window	Vertical fenestration Fixed window N/A	NFRC	Manufactured	108	0.34	0.22	0.42	N

[1] Notes: Newly installed fenestration shall have a certified NFRC Label Certificate or use the CEC default tables found in Table 110.6-A and Table 110.6-B. Center of Glass (COG) values are for the glass-only, determined by the manufacturer, and are shown for ease of verification. Site-built fenestration values are calculated per Nonresidential Appendix NA6 and are used in the analysis.
[2] Status: N - New, A - Altered, E - Existing

H1. DRY SYSTEM EQUIPMENT (FURNACES, AIR HANDLING UNITS, HEAT PUMPS, VRF, ECONOMIZERS ETC.)

01	02	03	04	05	06	07	08	09	10	11	12
			Heating				Cooling				
Equipment Name	Equipment Type	Qty	Total Heating Output (kBtu/h)	Supp Heat Output (kBtu/h)	Efficiency Unit	Efficiency	Total Cooling Output (kBtu/h)	Efficiency Unit	Efficiency	Economizer Type (if present)	Status[1]
HP-N1 Carrier 50GEQM04A2M	Single Zone Heat Pump (SZHP) Air System	1	20	0	HSPF	13.3	29.45	EER SEER	9.4 17	Differential DB	N
HP-N3 AAON RN-008-3-0-GBB	Single Zone Heat Pump (SZHP) Air System	1	79.68	0	COP	3.4	84.68	EER	11.4	No Economizer	N
HP-N2 Carrier 50GEQM08A2M	Single Zone Heat Pump (SZHP) Air System	1	60.19	0	COP	3.6	86.79	EER	12.2	Differential DB	N

[1] Status: N - New, A - Altered, E - Existing

CERTIFICATE OF COMPLIANCE - NONRESIDENTIAL PERFORMANCE COMPLIANCE METHOD — NRCC-PRF-E

Nonresidential Performance Compliance Method (Page 14 of 19)

H1. DRY SYSTEM EQUIPMENT (FURNACES, AIR HANDLING UNITS, HEAT PUMPS, VRF, ECONOMIZERS ETC.)

01	02	03	04	05	06	07	08	09	10	11	12
			Heating				Cooling				
Equipment Name	Equipment Type	Qty	Total Heating Output (kBtu/h)	Supp Heat Output (kBtu/h)	Efficiency Unit	Efficiency	Total Cooling Output (kBtu/h)	Efficiency Unit	Efficiency	Economizer Type (if present)	Status[1]
IDU-N1 Carrier 45MAHAQ24X	Single Zone Heat Pump (SZHP) Air System	1	23.85	0	HSPF2	11.7	24	EER2 SEER2	14 23.1	No Economizer	N

[1] Status: N - New, A - Altered, E - Existing

CERTIFICATE OF COMPLIANCE - NONRESIDENTIAL PERFORMANCE COMPLIANCE METHOD — NRCC-PRF-E

Nonresidential Performance Compliance Method (Page 15 of 19)

H3. NONRESIDENTIAL / COMMON USE AREA FAN SYSTEMS SUMMARY

01	02	03	04	05	06	07	08	09	10	11	12	13
			Supply Fan				Return / Relief Fan					
Name or Item Tag	Qty	Design OA CFM	CFM	Power	Power Units	Control	Fan Type	CFM	Power	Power Units	Control	Status[1]
HP-N1 Carrier 50GEQM04A2M	1	113.98	1,050	0.45	BHP	Constant Vol	N/A	N/A	N/A	N/A	N/A	N
HP-N3 AAON RN-008-3-0-GBB	1	0	1,500	0.58	BHP	Constant Vol	N/A	N/A	N/A	N/A	N/A	N
HP-N2 Carrier 50GEQM08A2M	1	175.95	2,625	1.01	BHP	Constant Vol	N/A	N/A	N/A	N/A	N/A	N
IDU-N1 Carrier 45MAHAQ24X	1	0	618	0.1	BHP	Constant Vol	N/A	N/A	N/A	N/A	N/A	N

01	14	15	16	17	18	19
	Supply Fan			Return / Relief Fan		
Name or Item Tag	Modeling Method	Fan Efficiency	Motor Efficiency	Modeling Method	Fan Efficiency	Motor Efficiency
HP-N1 Carrier 50GEQM04A2M	Brake Horse Power	0.65	0.86	N/A	N/A	N/A
HP-N3 AAON RN-008-3-0-GBB	Brake Horse Power	0.65	0.86	N/A	N/A	N/A
HP-N2 Carrier 50GEQM08A2M	Brake Horse Power	0.65	0.87	N/A	N/A	N/A
IDU-N1 Carrier 45MAHAQ24X	Brake Horse Power	0.65	0.86	N/A	N/A	N/A

[1] Status: N - New, A - Altered, E - Existing

CERTIFICATE OF COMPLIANCE - NONRESIDENTIAL PERFORMANCE COMPLIANCE METHOD — NRCC-PRF-E

Nonresidential Performance Compliance Method (Page 16 of 19)

H5. GENERAL EXHAUST FAN SUMMARY

01	02	03	04	05	06	07	08
System ID	Zone Name	Qty	CFM	Power	Power Units	Continuous Operation?	Status[1]
Zone 220-EF	2-Zone 2	1	1650	0.34	BHP	No	N
Unconditioned70-EF	5-Unconditioned	1	100	0.04	BHP	No	N

[1] Status: N - New, A - Altered, E - Existing

H8. SYSTEM SPECIAL FEATURES

01	02	03	04
System Name	Equipment Type	Interlocks per 140.4(n)[1]	Other Special Features and Controls
HP-N1 Carrier 50GEQM04A2M	Single Zone Heat Pump (SZHP) Air System	N/A	Differential DB
HP-N2 Carrier 50GEQM08A2M	Single Zone Heat Pump (SZHP) Air System	N/A	Zone(s) With CO2 Sensor Vent. Control Differential DB
WH-1 Bradford WhiteEF-1001 - SHW	Service Hot Water	N/A	Fixed Temperature Control

Notes: This table includes controls related to the performance path only. For projects using the prescriptive path, mandatory and prescriptive controls requirements are documented on the NRCC-MCH-E.
[1] Yes = interlocks are provided, No = interlocks are not provided, NA means no operable openings.

H9. NONRESIDENTIAL / COMMON USE AREA & HOTEL/MOTEL VENTILATION

01	02	03	04	05	06	07
	Mechanical Ventilation					
Zone Name	Ventilation Function	# of People	Supply OA CFM	Exhaust CFM	Conditioned Area (sf)	DCV or Occupant Sensor Controls, or Both
1-Zone 1	Retail - Sales	7.6	113.98	0	447	N/A
2-Zone 2	Exhaust - Toilets, public	5.96	0	1650	1193	N/A
3-Zone 3	Misc - All others	5.87	175.95	0	1173	DCV
4-Zone 4	General - Unoccupied	0	0	0	62	N/A

PBK
FRESNO, CA | 559-448-8400 | www.pbk.com

PARLIER HS STADIUM REPLACEMENT

603 3rd Street
Parlier, CA 93648

CLIENT PROJECT NO: 250093
DSA SUBMISSION
DSA APPL. NO. : 02-124002 DSA FILE NO. : 10-H12

PARLIER UNIFIED SCHOOL DISTRICT

CLIENT	
PARLIER UNIFIED SCHOOL DISTRICT	
DATE YYYY/MM/DD	PROJECT NUMBER 250093

DRAWING HISTORY

No.	Description	Date

CHECKED BY: Checker
DRAWN BY: Author

REGISTERED PROFESSIONAL ENGINEER
RYAN W. CARLSON
No. M34846
Exp. 6-30-28
MECHANICAL
STATE OF CALIFORNIA

LAWRENCE ENGINEERING GROUP
4910 E. Clinton Way, Suite 101 (559) 431-0101
Fresno, CA 93727 FAX (559) 431-1362

25106

MECHANICAL BUILDING N T-24

MX3.3

19 June 2026 8:47 AM P:\2025\25106 Parlier HS Stadium Replacement\4-Drawings\4 M\MX3.1-MX3.6 - MECHANICAL T-24.dwg rose

0"
1"

STATE OF CALIFORNIA
Domestic Water Heating System
CALIFORNIA ENERGY COMMISSION

CERTIFICATE OF COMPLIANCE			NRCC-PLB-E
This document is used to demonstrate compliance for nonresidential occupancies with requirements in §110.1, §110.3, §120.3, and §140.5, and with requirements in §141.0 for additions and alterations, for domestic water heating scopes using the prescriptive path. For high-rise residential and hotel/motel occupancies compliance is demonstrated with requirements in §110.1, §110.3, §160.4 and §170.2(d), and with requirements §180.1 for additions and §180.2 for alterations.			
Project Name: 25106 Parlier HS Stadium Replacement		**Report Page:**	**(Page 1 of 6)**
Project Address: 603 3rd Street		**Date Prepared:**	5/13/2026

A. GENERAL INFORMATION

01	Project Location (city)	Parlier	02	Climate Zone	13
03	Occupancy Types Within Project (select all that apply):				

● Retail ● Support Areas ● All Other Occupancies

B. PROJECT SCOPE

This table includes domestic water heating systems that are within the scope of the permit application and are demonstrating compliance using the prescriptive paths outlined in §140./ §170.2(d) and §141.0(a)/§180.1, or §141.0(b)2N / §180.2 for additions or alterations. Solar water heating systems are documented on the NRCC-SAB compliance document. Combined hydronic water heating systems are documented on the NRCC-MCH compliance document.

01	02	03		
My project consists of (check all that apply):	System Type 1,2	System Components		
☒ New system (DHW system being installed for the first time)	Serving Nonresidential or MF/Hotel/Motel Common use area	☒ Equipment	☒ Distribution	☒ Controls
☐ System Alteration (equipment, distribution or controls)		☐ Equipment	☐ Distribution	☐ Controls

[1]FOOTNOTES: Point of use water heaters, or other non-central systems used to serve nonresidential spaces, are considered individual systems.
[2] Dwelling units refers to hotel/motel guest rooms and units in a multifamily residential occupancy.
[3] DHW systems serving 2 or more dwelling units are considered "Central Systems" for multifamily and hotel/motel occupancies

C. COMPLIANCE RESULTS

Table C will indicate if the project data input into the compliance document is compliant with water heating requirements. If this table says "DOES NOT COMPLY" or "COMPLIES with Exceptional Conditions" refer to Table D. or the table indicated as not compliant for guidance.

01	02	03	04	05
Domestic Hot Water Equipment	Distribution Systems	Controls	Pool/Spa	**Compliance Results**
Table F	Table G	Table H	Table J	
Yes	Yes	Yes		COMPLIES

D. EXCEPTIONAL CONDITIONS

This table is auto-filled with uneditable comments because of selections made or data entered in tables throughout the form.

CERTIFICATE OF COMPLIANCE - NONRESIDENTIAL PERFORMANCE COMPLIANCE METHOD	NRCC-PRF-E
Nonresidential Performance Compliance Method	(Page 19 of 19)

Documentation Author's Declaration Statement

1. I certify that this Certificate of Compliance documentation is accurate and complete.	
Documentation Author Name: Brent Yang	Documentation Author Signature: Brent Yang
Company: Lawrence Engineering Group	Signature Date: 2026-05-13
Address: 4910 E Clinton Way, Suite 101	CEA/AEA/ECC Certification Identification (if applicable):
City/State/Zip: Fresno, CA 93727	Phone: (559) 431-0101

Responsible Person's Declaration statement

I certify the following under penalty of perjury, under the laws of the State of California:
1. The information provided on this Certificate of Compliance is true and correct.
2. I am eligible under Division 3 of the Business and Professions Code to accept responsibility for the building design or system design identified on this Certificate of Compliance (responsible designer).
3. The energy features and performance specifications, materials, components, and manufactured devices for the building design or system design identified on this Certificate of Compliance conform to the requirements of Title 24, Part 1 and Part 6 of the California Code of Regulations.
4. The building design features or system design features identified on this Certificate of Compliance are consistent with the information provided on other applicable compliance documents, worksheets, calculations, plans and specifications submitted to the enforcement agency for approval with this building permit application.
5. I understand that a completed signed copy of this Certificate of Compliance shall be made available with the building permit(s) issued for the building and shall be made available to the enforcement agency for all applicable inspections. I will take the necessary steps to fulfill this requirement.
6. I understand that a completed signed copy of this Certificate of Compliance is required to be included with the documentation the builder provides to the building owner at occupancy. I will take the necessary steps to fulfill this requirement.

Responsible Designer Name: Michael Schoen	Responsible Designer Signature:	
Company: PBK		
Address: 7790 N Palm Ave 93711	Date Signed:	
City/State/Zip: Fresno, CA 93711	License #: C-35165	
Phone: 559-448-8400	Title:	Scope:
Responsible Designer Name: Ryan Carlson	Responsible Designer Signature:	
Company: Lawrence Engineering Group		
Address: 4910 East Clinton Way Suite 101	Date Signed: 2026-05-13	
City/State/Zip: Fresno, CA 93727	License #: M34846	
Phone: 559-431-0101	Title:	Scope:

CERTIFICATE OF COMPLIANCE - NONRESIDENTIAL PERFORMANCE COMPLIANCE METHOD	NRCC-PRF-E
Nonresidential Performance Compliance Method	(Page 18 of 19)

O. DECLARATION OF REQUIRED CERTIFICATES OF ACCEPTANCE

Selections made by Documentation Author indicate which Certificates of Acceptance must be submitted for the features to be recognized for compliance. These documents must be provided to the building inspector during construction. Lighting controls and mechanical NRCAs must be completed through an Acceptance Test Technician Certification Provider (ATTCP).

Building Component 1	Form/Title & System Name(s)
Envelope	NRCA-ENV-02-F - NRFC label verification for fenestration
Mechanical	NRCA-MCH-02-A - Outdoor Air must be submitted for all newly installed HVAC units. Note: MCH-02-A can be performed in conjunction with MCH-07-A Supply Fan VFD Acceptance (if applicable) since testing activities overlap
	HP-N1 Carrier 50GEQM04A2M, HP-N3 AAON RN-008-3-0-GBB, HP-N2 Carrier 50GEQM08A2M and IDU-N1 Carrier 45MAHAQ24X.
Mechanical	NRCA-MCH-03-A - Constant Volume Single Zone HVAC
	HP-N1 Carrier 50GEQM04A2M, HP-N3 AAON RN-008-3-0-GBB, HP-N2 Carrier 50GEQM08A2M and IDU-N1 Carrier 45MAHAQ24X.
Mechanical	NRCA-MCH-05-A - Air Economizer Controls
	HP-N1 Carrier 50GEQM04A2M and HP-N2 Carrier 50GEQM08A2M.
Mechanical	NRCA-MCH-06-A Demand Control Ventilation Systems must be submitted for all systems required to employ demand controlled ventilation (refer to) can vary outside ventilation flow rates based on maintaining interior carbon dioxide (CO2) concentration setpoints.
	HP-N2 Carrier 50GEQM08A2M
Mechanical	NRCA-MCH-12-A FDD for Packaged Direct Expansion Units
	HP-N2 Carrier 50GEQM08A2M

[1]Refer to other prescriptive NRCC forms applicable to the project for additional NRCA tests required that are not included in the NRCC-PRF-E form

P. DECLARATION OF REQUIRED CERTIFICATES OF VERIFICATION

Selections made by Documentation Author indicate which Certificates of Verification must be submitted for the features to be recognized for compliance. These documents must be retained and provided to the building inspector during construction and can be found online

There are no certificates applicable to this project

CERTIFICATE OF COMPLIANCE - NONRESIDENTIAL PERFORMANCE COMPLIANCE METHOD	NRCC-PRF-E
Nonresidential Performance Compliance Method	(Page 17 of 19)

H11. ZONAL SYSTEM AND TERMINAL UNIT SUMMARY

01	02	03	04	05	06	07	08	09	10	11	12
System ID	System Type	Qty	Rated Capacity (kBtuh) Heating	Rated Capacity (kBtuh) Cooling	Airflow (cfm) Design	Airflow (cfm) Min.	Airflow (cfm) Min. Ratio	Fan Power	Fan Power Units	Fan Cycles	VSD
1-Zone 1-Trm	Uncontrolled	1	N/A	N/A	1,050	N/A	0	N/A	N/A	N/A	☐
2-Zone 2-Trm	Uncontrolled	1	N/A	N/A	1,500	N/A	0	N/A	N/A	N/A	☐
3-Zone 3-Trm	Uncontrolled	1	N/A	N/A	2,625	N/A	0	N/A	N/A	N/A	☐
4-Zone 4-Trm	Uncontrolled	1	N/A	N/A	618	N/A	0	N/A	N/A	N/A	☐

I1. WATER HEATER EQUIPMENT SUMMARY

01	02	03	04	05	06	07	08	09	10	11	12	13	14
Name	Heater Element Type	Tank Type	Qty	Tank Vol (gal)	Rated Input	Rated Input Unit	Efficiency	Efficiency Unit	Tank Insulation R-value Int/Ext	Standby Loss Fraction	1st Hr. Rating or Flow Rate (gal)	Heat Pump Type	Tank Location or Ambient Condition
WH-1 Bradford WhiteEF-1002	Natural Gas	Storage	1	100	200	kBtu/Hr	0.97	TE	N/A	0.01	N/A	N/A	N/A

N. DECLARATION OF REQUIRED CERTIFICATES OF INSTALLATION

Selections made by Documentation Author indicate which Certificates of Installation must be submitted for the features to be recognized for compliance. These documents must be retained and provided to the building inspector during construction and can be found online

Building Component	Form/Title
Envelope	NRCI-ENV-E - Envelope (for all buildings)
Mechanical	NRCI-MCH-E - For all buildings with Mechanical Systems
Plumbing	NRCI-PLB-E - For all buildings with Plumbing Systems
Solar and Battery	NRCI-SAB-E - Solar Water Heating, PV and Battery Storage Systems

STATE OF CALIFORNIA
Domestic Water Heating System
CALIFORNIA ENERGY COMMISSION

CERTIFICATE OF COMPLIANCE		NRCC-PLB-E
Project Name: 25106 Parlier HS Stadium Replacement	**Report Page:**	**(Page 5 of 6)**
	Date Prepared:	5/13/2026

DECLARATION OF REQUIRED CERTIFICATES OF INSTALLATION

Selections have been made based on information provided in this document. If any selection have been changed by permit applicant, an explanation should be included in Table E. Additional Remarks. These documents must be provided to the building inspector during construction and can be found online

Form/Title
NRCI-PLB-E - Must be submitted for all buildings

DECLARATION OF REQUIRED CERTIFICATES OF ACCEPTANCE

There are no forms required for this project.

DECLARATION OF REQUIRED CERTIFICATES OF VERIFICATION

There are no forms required for this project.

STATE OF CALIFORNIA
Domestic Water Heating System
CALIFORNIA ENERGY COMMISSION

CERTIFICATE OF COMPLIANCE		NRCC-PLB-E
Project Name: 25106 Parlier HS Stadium Replacement	**Report Page:**	**(Page 4 of 6)**
	Date Prepared:	5/13/2026

DOMESTIC HOT WATER CONTROLS - §110.3, §120.9, §160.4(d), §170.2(d), §180.1(b)3

This table is used to demonstrate compliance with control requirements in §110.3 for all occupancies. For nonresidential occupancies, compliance is demonstrated with requirements in §120.9. For multifamily residential and hotel/motel occupancies, compliance is also demonstrated with requirements in §160.4(d) / §170.2(d).

System Name	Yes	Not Applicable	Requirement
01	☒	☐	Construction documents require manufacturer certification that service water-heating systems are equipped with automatic temperature controls capable of adjusting temperature settings per §110.3(a).
02	☒	☐	Systems with capacity > 167,000 BTUH equipped with outlet temperature controls per §110.3(c)1 unless covered by California Plumbing Code 613.0.
03	☐	☒	Controls for circulating pumps or electrical heat trace systems are capable of automatically turning off the system per §110.3(c)2 unless systems serves healthcare facility.
04	☐	☒	For recirculation systems serving multiple dwelling units, design includes a mechanical or digital thermostatic master mixing valve on each distribution supply and return loop per §170.2(d) or §180.1(b)3 for additions.
05	☐	☒	For recirculation systems serving individual dwelling units, design includes manual on/off controls as specified in Reference Appendix RA4.4.9 per §170.2(d).
06	☐	☒	Combustion air positive shut-off shall be provided per §120.9(a) & §160.4(d) on all newly installed commercial boilers as follows: • Boilers with input capacity >= 2.5 MMBtu/h, in which the boiler is designed to operate with a nonpositive vent static pressure • Boilers where one stack serves two or more boilers with a total combined input capacity per stack of 2.5 MMBtu/h.
07	☐	☒	Boiler combustion air fans with motor >= 10 hp shall meet one of the following for newly installed boilers per §120.9(b) & §160.4(d)2: • The fan motor shall be driven by a variable speed drive OR • The fan motor shall include controls that limit the fan motor demand to <=30% of the total design wattage at 50% of the design air volume.
08	☐	☒	Newly installed boilers with an input capacity [d:gte/] 5MMBtu/h and a steady state full-load combustion efficiency < 90% shall maintain excess (stack-gas) oxygen concentrations <= 5% by volume on a dry basis over firing rates of 20-100%. Combustion air volume shall be controlled with respect to firing rate or flue gas oxygen concentration. Use of a common gas and combustion air control linkage or jack shaft is prohibited per §120.9(c) & §160.4(d)3.

STATE OF CALIFORNIA
Domestic Water Heating System
CALIFORNIA ENERGY COMMISSION

CERTIFICATE OF COMPLIANCE		NRCC-PLB-E
Project Name: 25106 Parlier HS Stadium Replacement	**Report Page:**	**(Page 3 of 6)**
	Date Prepared:	5/13/2026

DOMESTIC HOT WATER DISTRIBUTION SYSTEM

This table is used to demonstrate compliance for nonresidential occupancies with distribution requirements in §120.3 and §140.5. For multifamily and hotel/motel occupancies, compliance is demonstrated with requirements §110.3(c), §160.4, §170.2(d).

Mandatory Pipe Insulation All Occupancies - §120.3, §160.4

System Name	Yes	Not Applicable	Requirement
16	○	●	For systems serving dwelling units, pipe insulation must meet the minimum insulation requirements in Table 160.4-A (see blow) except: • Piping that penetrates framing members shall not be required to have pipe insulation for the distance of the framing penetration. Piping that penetrates metal framing shall use grommets, plugs, wrapping or other insulating material to assure that no contact is made with the metal framing. Insulation shall abut securely against all framing members • Piping installed in interior or exterior walls shall not be required to have pipe insulation if all of the requirements are met for compliance with Quality Insulation Installation (QII) as specified in the Reference Residential Appendix RA3.5. • Piping surrounded with a minimum of 1 inch of wall insulation, 2 inches of crawlspace insulation, or 4 inches of attic insulation, shall not be required to have pipe insulation.
17	●	○	For systems serving nonresidential spaces, pipe insulation for the following applications is specified to comply with Table 120.3-A1 or Table 120.3-A2 (see below) per §120.3: • Recirculating system piping, including supply and return piping of the water heater • The first 8 ft of hot and cold outlet piping, including between storage tank and heat trap, for a nonrecirculating storage system • Pipes that are externally heated
18	●	○	Per §120.3(b)/ §160.4(f), pipe and appurtenance insulation shall be protected from damage, including that due to sunlight, moisture, equipment maintenance, and wind. Insulation exposed to weather shall be installed with a cover suitable for outdoor service. Pipe insulation buried below grade must be installed in a water proof and non-crushable casing or sleeve.

TABLE 160.4-A PIPE INSULATION THICKNESS

Fluid Temperature Range (°F)	Conductivity Range (Btu-in per hour per ft² per °F)	Insulation Mean Rating Temp (°F)	Nominal Pipe Diameter (in): < 1	1 to < 1.5	1.5 to < 4	1.5 to < 4 Multifamily & Hotel/Motel
			Minimum Insulation Required			
105-140	0.22 - 0.28	100	1.0 in or R-7.7	1.5 in or R-12.5	1.5 in or R-11	2.0 in or R-16

STATE OF CALIFORNIA
Domestic Water Heating System
CALIFORNIA ENERGY COMMISSION

CERTIFICATE OF COMPLIANCE		NRCC-PLB-E
Project Name: 25106 Parlier HS Stadium Replacement	**Report Page:**	**(Page 2 of 6)**
	Date Prepared:	5/13/2026

E. ADDITIONAL REMARKS

This table includes remarks made by the permit applicant to the Authority Having Jurisdiction.

F. DOMESTIC HOT WATER EQUIPMENT

This table is used to demonstrate compliance with mandatory equipment requirements in §110.1 and §110.3. Compliance with prescriptive requirements in §140.5(c) / §170.2(d) must also be demonstrated and with §141.0 / §180.1/ §180.2 for addition and alteration scopes.

Equipment Schedule: Water Heating Efficiency and Standby Loss

01		02		03		04		
System Name	WH-1 Bradford WhiteEF-100T-199E-3N(A)	Space type	Nonresidential	Exception to §140.5(c)/§170.2(d)2B			Capacity-weighted Average Efficiency %	
05	06	07	08	09	10	11	12	13
Name or Item Tag	Quantity	System Status	Equipment Type	Volume (gal)	Rated Input Capacity (Btu/h)	Rated Efficiency	Minimum Efficiency Required	Maximum Standby Loss
WH-1 Bradford WhiteEF-100T-199E-3N(A)	1	New/ Addition	Electric Instantaneous	100	199,999	0.97	Must meet Federal Minimum Requirements	Must meet Federal Minimum Requirements

[1]FOOTNOTE: In systems >= 1MMBtu/h with multiple units, gas water heaters with input capacity > 100,000 Btu/h may meet 90% Et requirements via an input capacity-weighted average.
[2]FOOTNOTE: Compliant equipment may be found in the Modernized Appliance Efficiency Database System (MAEDBS) on the Energy Commission website: https://cacertappliances.energy.ca.gov/Pages/Search/AdvancedSearch.aspx

STATE OF CALIFORNIA
Domestic Water Heating System
CALIFORNIA ENERGY COMMISSION

CERTIFICATE OF COMPLIANCE			NRCC-PLB-E
Project Name: 25106 Parlier HS Stadium Replacement		**Report Page:**	**(Page 6 of 6)**
Project Address: 603 3rd Street		**Date Prepared:**	5/13/2026

DOCUMENTATION AUTHOR'S DECLARATION STATEMENT

I certify that this Certificate of Compliance documentation is accurate and complete.

Documentation Author Name: Brent Yang	Documentation Author Signature: Brent Yang
Company: Lawrence Engineering Group	Signature Date: 2026-05-13
Address: 4910 E Clinton Way, Suite 101	CEA/AEA/ECC Certification Identification (if applicable):
City/State/Zip: Fresno CA 93727	Phone: (559) 431-0101

RESPONSIBLE PERSON'S DECLARATION STATEMENT

I certify the following under penalty of perjury, under the laws of the State of California:
1. The information provided on this Certificate of Compliance is true and correct.
2. I am eligible under Division 3 of the Business and Professions Code to accept responsibility for the building design or system design identified on this Certificate of Compliance (responsible designer)
3. The energy features and performance specifications, materials, components, and manufactured devices for the building design or system design identified on this Certificate of Compliance conform to the requirements of Title 24, Part 1 and Part 6 of the California Code of Regulations.
4. The building design features or system design features identified on this Certificate of Compliance are consistent with the information provided on other applicable compliance documents, worksheets, calculations, plans and specifications submitted to the enforcement agency for approval with this building permit application.
5. I will ensure that a completed signed copy of this Certificate of Compliance shall be made available with the building permit(s) issued for the building, and made available to the enforcement agency for all applicable inspections. I understand that a completed signed copy of this Certificate of Compliance is required to be included with the documentation the builder provides to the building owner at occupancy.

Responsible Person Name: Ryan Carlson	Responsible Person Signature:
Responsible Person Scope:	
Company: Lawrence Engineering Group	Date Signed: 2026-05-13
Address: 4910 East Clinton Way Suite 101	License: M34846
City/State/Zip: Fresno CA 93727	Phone: 559-431-0101

PBK
www.pbk.com
559-448-8400
FRESNO, CA

PARLIER HS STADIUM REPLACEMENT
603 3rd Street
Parlier, CA 93648

CLIENT PROJECT NO: 250093
DSA SUBMISSION
DSA APPL. NO. : 02-124002 DSA FILE NO. : 10-H12

PARLIER UNIFIED SCHOOL DISTRICT

CLIENT	
PARLIER UNIFIED SCHOOL DISTRICT	
DATE YYYY/MM/DD	PROJECT NUMBER 250093
DRAWING HISTORY	

No.	Description	Date

CHECKED BY: Checker
DRAWN BY: Author

REGISTERED PROFESSIONAL ENGINEER RYAN W. CARLSON No. M34846 Exp. 6-30-28 MECHANICAL STATE OF CALIFORNIA

LAWRENCE ENGINEERING GROUP
4910 E. Clinton Way, Suite 101 (559) 431-0101
25106
Fresno, CA 93727 FAX (559) 431-1362

MECHANICAL BUILDING N T-24

MX3.4

19 June 2026 8:47 AM P:\2025\25106 Parlier HS Stadium Replacement\4-Drawings\4 M\MX3.1-MX3.6 - MECHANICAL T-24.dwg rose

CERTIFICATE OF COMPLIANCE - NONRESIDENTIAL PERFORMANCE COMPLIANCE METHOD NRCC-PRF-E

Nonresidential Performance Compliance Method (Page 1 of 18)

Project Name: 25106 Parlier HS Bldg N alt 3 **Date Prepared:** 2026-05-13

A. General Information

1	Project Name	25106 Parlier HS Bldg N alt 3		
2	Run Title	Title 24 Analysis		
3	Project Location	603 3rd Street		
4	City	Parlier	5 Standards Version	Compliance 2025
6	Zip code	63648	7 Compliance Software (version)	EnergyPro 10.0
8	Climate Zone	13	9 Building Orientation (deg)	90
10	Building Type(s)	• Nonresidential	11 Weather File	CA_Title24_2025_CZ13_FRESNO-YOSEMITE.epw
12	Project Scope	• New envelope and mechanical	13 Number of Dwelling Units	0
14	Total Conditioned Floor Area in Scope (ft^2)	1702	15 Total # of hotel/motel rooms	0
16	Total Unconditioned Floor Area (ft^2)	55	17 Fuel Type	Natural gas
18	Is Natural Gas Available per Section 100.1?	Yes	19 Nonresidential Conditioned Floor Area	1702
20	Total # of Stories (Habitable Above-Grade)	1	21 Residential Conditioned Floor Area	0

CA Building Energy Efficiency Standards - 2025 Nonresidential Compliance | Report Version: 2025.0.000 Schema Version: rev 20250101 | Report Generated: 2026-05-13 17:18:43 Compliance ID: EnergyPro-2975-0526-0061

CERTIFICATE OF COMPLIANCE - NONRESIDENTIAL PERFORMANCE COMPLIANCE METHOD NRCC-PRF-E

Nonresidential Performance Compliance Method (Page 2 of 18)

B. PROJECT SUMMARY

Table B shows which building components are included in the performance calculation. If indicated as not included, the project must show compliance prescriptively if within the permit application.

Building Components Complying via Performance					Building Components Complying Prescriptively		
Envelope (See Table G)	Nonres	Performance	Solar Thermal Water Heating (See Table I3)	☐	Performance	The following building components are ONLY eligible for prescriptive compliance and should be documented on the NRCC form listed if within the scope of the permit application (i.e. compliance will not be shown on the NRCC-PRF-E).	
	MultiFam	Not Included		☒	Not Included		
Mechanical (See Table H)	Nonres	Performance	Covered Process: Commercial Kitchens (see Table J)	☐	Performance	Indoor Lighting (Unconditioned) 140.6 & 170.2(e)	NRCC-ITI-E is required
	MultiFam	Not Included		☒	Not Included	Outdoor Lighting 140.7 & 170.2(e)	NRCC-LTO-E is required
Domestic Hot Water (See Table I)	Nonres	Performance	Covered Process: Laboratory Exhaust (see Table J)	☐	Performance	Sign Lighting 140.8 & 170.2(e)	NRCC-LTS-E is required
	MultiFam	Not Included		☒	Not Included	**Building Components Complying with Mandatory Measures**	
Lighting (Indoor Conditioned, see Table K)	Nonres	Not Included	Photovoltaics (see Table F)	☒	Performance	Electrical power systems, commissioning, solar ready, elevator and escalator requirements are mandatory and should be documented on the NRCC form listed if applicable (i.e. compliance will not be shown on the NRCC-PRF-E.)	
	MultiFam	Not Included		☐	Not Included	Electrical Power Distribution 110.11	NRCC-ELC-E is required
			Battery (see Table F)	☒	Performance	Commissioning 120.8	NRCC-CXR-E is required
				☐	Not Included	Solar and Battery 110.10	NRCC-SAB-E is required

CA Building Energy Efficiency Standards - 2025 Nonresidential Compliance | Report Version: 2025.0.000 Schema Version: rev 20250101 | Report Generated: 2026-05-13 17:18:43 Compliance ID: EnergyPro-2975-0526-0061

CERTIFICATE OF COMPLIANCE - NONRESIDENTIAL PERFORMANCE COMPLIANCE METHOD NRCC-PRF-E

Nonresidential Performance Compliance Method (Page 3 of 18)

C1. COMPLIANCE SUMMARY

COMPLIES[1]

	Long-term System Cost (LSC)[1]		Source Energy Use
	Efficiency[2] ($/ft^2$-yr)	Total[2] ($/ft^2$-yr)	Total[2] (kBtu/ft^2-yr)
Standard Design	125.98	115.73	30.27
Proposed Design	115.33	91.85	29.93
Compliance Margins	**10.65**	**23.88**	**0.34**
	Pass	**Pass**	**Pass**

[1] *Long-term System Cost (LSC) is a 30-year present value cost to California's energy system. LSC is not a predicted utility bill.*
[2] *Efficiency measures include energy efficiency improvements such as better building envelope and more efficient mechanical equipment*
[3] *Compliance Totals include efficiency, photovoltaics and batteries*
[4] *New Construction: Building complies when Proposed Design is equal to or less than Standard Design in all compliance categories and unmet load hour limits are not exceeded. Complete Addition Scope and Existing, Addition and Alteration Scope: Building complies when efficiency compliance margin is greater than or equal to zero and unmet load hour limits are not exceeded.*

CA Building Energy Efficiency Standards - 2025 Nonresidential Compliance | Report Version: 2025.0.000 Schema Version: rev 20250101 | Report Generated: 2026-05-13 17:18:43 Compliance ID: EnergyPro-2975-0526-0061

CERTIFICATE OF COMPLIANCE - NONRESIDENTIAL PERFORMANCE COMPLIANCE METHOD NRCC-PRF-E

Nonresidential Performance Compliance Method (Page 4 of 18)

C2. LSC ENERGY COMPLIANCE RESULTS FOR PERFORMANCE COMPONENTS (Annual LSC Energy Use, $/ft^2$-yr)

COMPLIES

Energy Component	Standard Design (LSC)	Proposed Design (LSC)	Compliance Margin (LSC)[2]
Space Heating	28.02	40.76	-12.74
Space Cooling	32.64	39.88	-7.24
Indoor Fans	50.84	21.23	29.61
Heat Rejection	0	0	0
Pumps & Misc.	0	0	0
Domestic Hot Water	2.49	1.47	1.02
Indoor Lighting	11.99	11.99	0
Flexibility	---	---	---
EFFICIENCY COMPLIANCE TOTAL	**125.98**	**115.33**	**10.65 (8.5%)**
Photovoltaics	-10.25	-23.48	13.23
Batteries	---	---	---
TOTAL COMPLIANCE	**115.73**	**91.85**	**23.88 (20.6%)**

[1] *Notes: This number in parenthesis following the Compliance Margin in column 4, represents the Percent Better than Standard.*

CA Building Energy Efficiency Standards - 2025 Nonresidential Compliance | Report Version: 2025.0.000 Schema Version: rev 20250101 | Report Generated: 2026-05-13 17:18:43 Compliance ID: EnergyPro-2975-0526-0061

CERTIFICATE OF COMPLIANCE - NONRESIDENTIAL PERFORMANCE COMPLIANCE METHOD NRCC-PRF-E

Nonresidential Performance Compliance Method (Page 5 of 18)

C3. LSC ENERGY RESULTS FOR NON-REGULATED COMPONENTS[1]

Non-Regulated Energy Component	Standard Design (LSC)	Proposed Design (LSC)	Compliance Margin (LSC)[2]
Receptacle	91.56	91.56	---
Process	---	---	---
Other Ltg	0.22	0.22	---
Process Motors	0.54	0.54	---
TOTAL (TOTAL COMPLIANCE + NON-REGULATED COMPONENTS)	**208.05**	**184.17**	**23.88 (11.5%)**

[1] *Notes: This table is not used for Energy Code Compliance.*
[2] *Notes: This number in parenthesis following the Compliance Margin in column 4, represents the Percent Better than Standard.*

CA Building Energy Efficiency Standards - 2025 Nonresidential Compliance | Report Version: 2025.0.000 Schema Version: rev 20250101 | Report Generated: 2026-05-13 17:18:43 Compliance ID: EnergyPro-2975-0526-0061

CERTIFICATE OF COMPLIANCE - NONRESIDENTIAL PERFORMANCE COMPLIANCE METHOD NRCC-PRF-E

Nonresidential Performance Compliance Method (Page 6 of 18)

C4. SOURCE ENERGY COMPLIANCE RESULTS FOR PERFORMANCE COMPONENTS (Annual SOURCE Energy Use, kBtu/ft^2 /yr)

COMPLIES

Energy Component	Standard Design (SOURCE)	Proposed Design (SOURCE)	Compliance Margin (SOURCE)[2]
Space Heating	11.19	16.25	-5.06
Space Cooling	4.63	5.52	-0.89
Indoor Fans	12.14	5.5	6.64
Heat Rejection	0	0	0
Pumps & Misc.	0	0	0
Domestic Hot Water	0.67	2.5	-1.83
Indoor Lighting	2.77	2.77	0
Flexibility	---	---	---
EFFICIENCY COMPLIANCE TOTAL	**31.4**	**32.54**	**-1.14 (-3.6%)**
Photovoltaics	-1.13	-2.61	1.48
Batteries	---	---	---
TOTAL COMPLIANCE	**30.27**	**29.93**	**0.34 (1.1%)**

[1] *Notes: This number in parenthesis following the Compliance Margin in column 4, represents the Percent Better than Standard.*

CA Building Energy Efficiency Standards - 2025 Nonresidential Compliance | Report Version: 2025.0.000 Schema Version: rev 20250101 | Report Generated: 2026-05-13 17:18:43 Compliance ID: EnergyPro-2975-0526-0061

CERTIFICATE OF COMPLIANCE - NONRESIDENTIAL PERFORMANCE COMPLIANCE METHOD NRCC-PRF-E

Nonresidential Performance Compliance Method (Page 7 of 18)

C5. SOURCE ENERGY RESULTS FOR NON-REGULATED COMPONENTS[1]

Non-Regulated Energy Component	Standard Design (SOURCE)	Proposed Design (SOURCE)	Compliance Margin (SOURCE)[2]
Receptacle	20.5	20.5	---
Process	---	---	---
Other Ltg	0.05	0.05	---
Process Motors	0.14	0.14	---
TOTAL (TOTAL COMPLIANCE + NON-REGULATED COMPONENTS)	**50.96**	**50.62**	**0.34 (0.7%)**

[1] *Notes: This table is not used for Energy Code Compliance.*
[2] *Notes: This number in parenthesis following the Compliance Margin in column 4, represents the Percent Better than Standard.*

C6. 'ABOVE CODE' QUALIFICATIONS

☐ This project is pursuing CalGreen Tier 1 ☐ This project is pursuing CalGreen Tier 2

CA Building Energy Efficiency Standards - 2025 Nonresidential Compliance | Report Version: 2025.0.000 Schema Version: rev 20250101 | Report Generated: 2026-05-13 17:18:43 Compliance ID: EnergyPro-2975-0526-0061

CERTIFICATE OF COMPLIANCE - NONRESIDENTIAL PERFORMANCE COMPLIANCE METHOD NRCC-PRF-E

Nonresidential Performance Compliance Method (Page 8 of 18)

C7. ENERGY USE SUMMARY

Energy Component	Standard Design Site (MWh)	Proposed Design Site (MWh)	Margin (MWh)	Standard Design Site (MBtu)	Proposed Design Site (MBtu)	Margin (MBtu)
Space Heating	8.1	11.6	-3.5	---	---	---
Space Cooling	11.7	13.9	-2.2	---	---	---
Indoor Fans	16.8	7	9.8	---	---	---
Heat Rejection	---	---	---	---	---	---
Pumps & Misc.	---	---	---	---	---	---
Domestic Hot Water	0.8	---	---	---	4.7	---
Indoor Lighting	4.2	4.2	0	---	---	---
Flexibility	---	---	---	---	---	---
EFFICIENCY TOTAL	**41.6**	**36.7**	**4.9**	**0**	**4.7**	**-4.7**
Photovoltaics	-4.4	-10	5.6	---	---	---
Batteries	---	---	---	---	---	---
ENERGY USE SUBTOTAL	**37.2**	**26.7**	**10.5**	**0**	**4.7**	**-4.7**
Receptacle	32.8	32.8	0	---	---	---
Process	---	---	---	---	---	---
Other Ltg	0.1	0.1	0	---	---	---
Process Motors	0.2	0.2	0	---	---	---
ENERGY USE TOTAL	**70.3**	**59.8**	**10.5**	**0**	**4.7**	**-4.7**

CA Building Energy Efficiency Standards - 2025 Nonresidential Compliance | Report Version: 2025.0.000 Schema Version: rev 20250101 | Report Generated: 2026-05-13 17:18:43 Compliance ID: EnergyPro-2975-0526-0061

CERTIFICATE OF COMPLIANCE - NONRESIDENTIAL PERFORMANCE COMPLIANCE METHOD NRCC-PRF-E

Nonresidential Performance Compliance Method (Page 9 of 18)

C8. ENERGY USE INTENSITY (EUI)

	Standard Design (kBtu/ft^2 / yr)	Proposed Design (kBtu/ft^2 / yr)	Margin (kBtu/ft^2 / yr)	Margin Percentage
GROSS EUI[1]	145.06	138.22	6.84	4.72
NET EUI[1]	136.52	118.8	17.72	12.98

[1] *Notes: Gross EUI is Energy Use Total (not including PV)/Total Building Area. Net EUI is Energy Use Total (including PV)/Total Building Area.*

D1. EXCEPTIONAL CONDITIONS

• The user model includes space(s) that are designed to be served by mechanical cooling systems, but the cooling systems were not included in the simulation model. A cooling system has been modeled for both the proposed and standard cases.
• The user model includes space(s) without sufficient cooling equipment. Cooling equipment has been added to the model to meet cooling loads.
• PV/Battery Building Type has been modified from software defaults for one or more spaces. Review project's PV/Battery Building Type(s) with documentation author. Refer to Energy Code section 140.10 for Nonresidential or 170.2(g) for more information.
• Verify project meets the requirements for Vestibules as per Section 120.7(e).

F1. REQUIRED PV SYSTEMS

01 DC System Size (kWdc)	02 Exception[1]	03 Module Type	04 Array Type	05 Power Electronics	06 CFI	07 Azimuth (deg)	08 Tilt Input	09 Array Angle (deg)	10 Tilt: (x in 12)	11 Inverter Eff. (%)	12 Annual Solar Access (%)
6.1		Standard (14-17%)	Fixed	none	false	180	Degrees	22	4.85	96	100

[1]*See Table D1 for any PV exceptions used.*

CA Building Energy Efficiency Standards - 2025 Nonresidential Compliance | Report Version: 2025.0.000 Schema Version: rev 20250101 | Report Generated: 2026-05-13 17:18:43 Compliance ID: EnergyPro-2975-0526-0061

CERTIFICATE OF COMPLIANCE - NONRESIDENTIAL PERFORMANCE COMPLIANCE METHOD NRCC-PRF-E

Nonresidential Performance Compliance Method (Page 10 of 18)

F1B. PV BATTERY BUILDING TYPE(S)

01 Building Occupancy Type* (From Table 140.10-A/B and 170.2-U/V)	02 Conditioned Floor Area (ft^2)	03 Unconditioned Floor Area (ft^2)
Events and Exhibits	0	0
Library	0	0
Hotel/Motel	0	0
Office, Financial Institutions, Unleased Tenant Space, Medical Office Building/Clinic	0	0
Restaurants	0	0
Retail, Grocery	0	0
School	1702	55
Warehouse	0	0
Religious Worship	0	0
Sports and Recreation	0	0
Multifamily greater than 3 stories	0	0
None	0	0

**Building Occupancy Types are defined in Section 100.1 of the Energy Code*

F2. BATTERY SYSTEMS[1]

01 Control	02 Capacity (kWh)	03 Charging Efficiency	04 Charging Rate (kW)	05 Discharging Efficiency	06 Discharging Rate (kW)	07 Round Trip Efficiency
TOU	3.8	N/A	5	N/A	5	0.9

[1]*See Table D1 for any Battery exceptions used.*

CA Building Energy Efficiency Standards - 2025 Nonresidential Compliance | Report Version: 2025.0.000 Schema Version: rev 20250101 | Report Generated: 2026-05-13 17:18:43 Compliance ID: EnergyPro-2975-0526-0061

CERTIFICATE OF COMPLIANCE - NONRESIDENTIAL PERFORMANCE COMPLIANCE METHOD NRCC-PRF-E

Nonresidential Performance Compliance Method (Page 11 of 18)

G1. ENVELOPE GENERAL INFORMATION (conditioned spaces only)

01 Opaque Surfaces & Orientation	02 Total Gross Surface Area (ft^2)	03 Total Fenestration Area (ft^2)	04 Window to Wall Ratio (%)
North-Facing[1]	625	36	5.76
East-Facing[2]	591	36	6.09
South-Facing[3]	397	0	0
West-Facing[4]	577	36	6.24
Total	**2190**	**108**	**4.93**
Roof	1702	0	0

Notes
[1]North-Facing is oriented to within 45 degrees of true north, including 4500'00" east of north (NE), but excluding 4500'00" west of north (NW),
[2]East-Facing is oriented to within 45 degrees of true east, including 4500'00" south of east (SE), but excluding 4500'00" north of east (NE),
[3]South-Facing is oriented to within 45 degrees of true south, including 4500'00" west of south (SW), but excluding 4500'00" east of south (SE),
[4]West-Facing is oriented to within 45 degrees of true west, including 4500'00" north of west (NW), but excluding 4500'00" south of west (SW).

G4. NONRESIDENTIAL AIR BARRIER

01 Building Story Name	02 Air Barrier
Com-Floor 1	No air barrier

CA Building Energy Efficiency Standards - 2025 Nonresidential Compliance | Report Version: 2025.0.000 Schema Version: rev 20250101 | Report Generated: 2026-05-13 17:18:43 Compliance ID: EnergyPro-2975-0526-0061

CERTIFICATE OF COMPLIANCE - NONRESIDENTIAL PERFORMANCE COMPLIANCE METHOD NRCC-PRF-E

Nonresidential Performance Compliance Method (Page 12 of 18)

G5. OPAQUE SURFACE ASSEMBLY SUMMARY

01 Surface Name	02 Construction Type	03 Area (ft^2)	04 Framing Type	05 Cavity R-Value	06 Continuous R-Value: Interior	06 Continuous R-Value: Exterior	07 Units	08 Value	09 Description of Assembly Layers	10 Status[1]
25106 Exterior Wall8	Exterior Wall	2,422	Wood	19	N/A	N/A	U-factor	0.0716	Stucco - 7/8 in. Vapor permeable felt - 1/8 in. Composite-3 Gypsum Board - 5/8 in.	N
25106 Roof17	Roof	1,757	N/A	0	N/A	29.34	U-factor	0.0307	Built-up roofing - 3/8 in. Vapor permeable felt - 1/8 in. Plywood - 1/2 in. Cellular polyisocyanurate (unfaced) - 5 in. R29 Air - Cavity - Wall Roof Ceiling - 4 in. or more Gypsum Board - 5/8 in.	N
Slab On Grade19	Underground Floor	1,757	N/A	0	N/A	N/A	F-factor	0.73	Slab Type =Uninsulated slab on grade Insulation Orientation =None Insulation R-Value =none	N

[1] *Status: N - New, A - Altered, E - Existing*

G6A. OPAQUE DOOR SUMMARY (NONRESIDENTIAL)

01 Assembly Name	02 Area (ft^2)	03 Overall U-factor	04 Status[1]
Metal Door11	189	0.7	N

[1] *Status: N - New, A - Altered, E - Existing*

CA Building Energy Efficiency Standards - 2025 Nonresidential Compliance | Report Version: 2025.0.000 Schema Version: rev 20250101 | Report Generated: 2026-05-13 17:18:43 Compliance ID: EnergyPro-2975-0526-0061

CERTIFICATE OF COMPLIANCE - NONRESIDENTIAL PERFORMANCE COMPLIANCE METHOD NRCC-PRF-E

Nonresidential Performance Compliance Method (Page 13 of 18)

G7A. FENESTRATION ASSEMBLY SUMMARY (NONRESIDENTIAL)

01 Fenestration Assembly Name	02 Fenestration Type/ Product Type / Frame Type	03 Certification Method[1]	04 Assembly Method	05 Area (ft^2)	06 Overall U-factor	07 Overall SHGC	08 Overall VT	09 Status[2]
25106 Window	Vertical fenestration Fixed window N/A	NFRC	Manufactured	108	0.34	0.22	0.42	N

[1] *Notes: Newly installed fenestration shall have a certified NFRC Label Certificate or use the CEC default tables found in Table 110.6-A and Table 110.6-B. Center of Glass (COG) values are for the glass only, determined by the manufacturer, and are shown for ease of verification. Site-built fenestration values are calculated per Nonresidential Appendix NA6 and are used in the analysis.*
[2] *Status: N - New, A - Altered, E - Existing*

CA Building Energy Efficiency Standards - 2025 Nonresidential Compliance | Report Version: 2025.0.000 Schema Version: rev 20250101 | Report Generated: 2026-05-13 17:18:43 Compliance ID: EnergyPro-2975-0526-0061

CERTIFICATE OF COMPLIANCE - NONRESIDENTIAL PERFORMANCE COMPLIANCE METHOD NRCC-PRF-E

Nonresidential Performance Compliance Method (Page 14 of 18)

H3. NONRESIDENTIAL / COMMON USE AREA FAN SYSTEMS SUMMARY

01 Name or Item Tag	02 Qty	03 Design OA CFM	04 Supply Fan: CFM	05 Supply Fan: Power	06 Supply Fan: Power Units	07 Supply Fan: Control	08 Return / Relief Fan: Fan Type	09 Return / Relief Fan: CFM	10 Return / Relief Fan: Power	11 Return / Relief Fan: Power Units	12 Return / Relief Fan: Control	13 Status[1]
HP-N1 Carrier 50GEQM04A2M	1	113.98	1,050	0.45	BHP	Constant Vol	N/A	N/A	N/A	N/A	N/A	N
HP-N3 AAON RN-008-3-O-GBB	1	0	1,500	0.58	BHP	Constant Vol	N/A	N/A	N/A	N/A	N/A	N
IDU-N1 Carrier 45MAHAQ24X	1	0	618	0.1	BHP	Constant Vol	N/A	N/A	N/A	N/A	N/A	N

01 Name or Item Tag	14 Supply Fan: Modeling Method	15 Supply Fan: Fan Efficiency	16 Supply Fan: Motor Efficiency	17 Return / Relief Fan: Modeling Method	18 Return / Relief Fan: Fan Efficiency	19 Return / Relief Fan: Motor Efficiency
HP-N1 Carrier 50GEQM04A2M	Brake Horse Power	0.65	0.86	N/A	N/A	N/A
HP-N3 AAON RN-008-3-O-GBB	Brake Horse Power	0.65	0.86	N/A	N/A	N/A
IDU-N1 Carrier 45MAHAQ24X	Brake Horse Power	0.65	0.86	N/A	N/A	N/A

[1] *Status: N - New, A - Altered, E - Existing*

H5. GENERAL EXHAUST FAN SUMMARY

01 System ID	02 Zone Name	03 Qty	04 CFM	05 Power	06 Power Units	07 Continuous Operation?	08 Status[1]
Zone 220-EF	2-Zone 2	1	1650	0.34	BHP	No	N
Unconditioned55-EF	4-Unconditioned	1	100	0.04	BHP	No	N

[1] *Status: N - New, A - Altered, E - Existing*

CA Building Energy Efficiency Standards - 2025 Nonresidential Compliance | Report Version: 2025.0.000 Schema Version: rev 20250101 | Report Generated: 2026-05-13 17:18:43 Compliance ID: EnergyPro-2975-0526-0061

CERTIFICATE OF COMPLIANCE - NONRESIDENTIAL PERFORMANCE COMPLIANCE METHOD NRCC-PRF-E

Nonresidential Performance Compliance Method (Page 15 of 18)

H8. SYSTEM SPECIAL FEATURES

01 System Name	02 Equipment Type	03 Interlocks per 140.4(c)[1]	04 Other Special Features and Controls
HP-N1 Carrier 50GEQM04A2M	Single Zone Heat Pump (SZHP) Air System	N/A	Differential DB
WH-1 Bradford White(F-1001 - 5HW	Service Hot Water	N/A	Fixed Temperature Control

Notes: This table includes controls related to the performance path only. For projects using the prescriptive path, mandatory and prescriptive controls requirements are documented on the NRCC-MCH-E.
[1] *Yes = interlocks are provided, No = interlocks are not provided, NA means no operable openings.*

H9. NONRESIDENTIAL / COMMON USE AREA & HOTEL/MOTEL VENTILATION

01 Zone Name	02 Mechanical Ventilation: Ventilation Function	03 Mechanical Ventilation: # of People	04 Mechanical Ventilation: Supply OA CFM	05 Mechanical Ventilation: Exhaust CFM	06 Conditioned Area (ft^2)	07 DCV or Occupant Sensor Controls, or Both
1-Zone 1	Retail - Sales	7.6	113.98	0	447	N/A
2-Zone 2	Exhaust - Toilets, public	5.96	0	1650	1193	N/A
3-Zone 4	General - Unoccupied	0	0	0	62	N/A

H11. ZONAL SYSTEM AND TERMINAL UNIT SUMMARY

01 System ID	02 System Type	03 Qty	04 Rated Capacity (kBtu/h): Heating	05 Rated Capacity (kBtu/h): Cooling	06 Airflow (cfm): Design	07 Airflow (cfm): Min.	08 Min. Ratio	09 Fan: Power	10 Fan: Power Units	11 Fan: Cycles	12 VSD
1-Zone 1-Trm	Uncontrolled	1	N/A	N/A	1,050	N/A	0	N/A	N/A	N/A	☐
2-Zone 2-Trm	Uncontrolled	1	N/A	N/A	1,500	N/A	0	N/A	N/A	N/A	☐
3-Zone 4-Trm	Uncontrolled	1	N/A	N/A	618	N/A	0	N/A	N/A	N/A	☐

CA Building Energy Efficiency Standards - 2025 Nonresidential Compliance | Report Version: 2025.0.000 Schema Version: rev 20250101 | Report Generated: 2026-05-13 17:18:43 Compliance ID: EnergyPro-2975-0526-0061

CERTIFICATE OF COMPLIANCE - NONRESIDENTIAL PERFORMANCE COMPLIANCE METHOD NRCC-PRF-E

Nonresidential Performance Compliance Method (Page 16 of 18)

I1. WATER HEATER EQUIPMENT SUMMARY

01 Name	02 Heater Element Type	03 Tank Type	04 Qty	05 Tank Vol (gal)	06 Rated Input	07 Rated Input Unit	08 Efficiency	09 Efficiency Unit	10 Tank Insulation R-value Ins/Use	11 Standby Loss Fraction	12 1st Hr. Rating or Flow Rate (gal)	13 Heat Pump Type	14 Tank Location or Ambient Condition
WH-1 Bradford White(F-1002	Natural Gas	Storage	1	100	200	kBtu/hr	0.97	TE	N/A	0.01	N/A	N/A	N/A

N. DECLARATION OF REQUIRED CERTIFICATES OF INSTALLATION

Selections made by Documentation Author indicate which Certificates of Installation must be submitted for the features to be recognized for compliance. These documents must be retained and provided to the building inspector during construction and can be found online

Building Component	Form/Title
Envelope	NRCI-ENV-E - Envelope (for all buildings)
Mechanical	NRCI-MCH-E - For all buildings with Mechanical Systems
Plumbing	NRCI-PLB-E - For all buildings with Plumbing Systems
Solar and Battery	NRCI-SAB-E - Solar Water Heating, PV and Battery Storage Systems

O. DECLARATION OF REQUIRED CERTIFICATES OF ACCEPTANCE

Selections made by Documentation Author indicate which Certificates of Acceptance must be submitted for the features to be recognized for compliance. These documents must be provided to the building inspector during construction. Lighting controls and mechanical NRCAs must be completed through an Acceptance Test Technician Certification Provider (ATCP).

Building Component [1]	Form/Title & System Name(s)
Envelope	NRCA-ENV-02-F - NRFC label verification for fenestration
Mechanical	NRCA-MCH-02-A - Outdoor Air must be submitted for all newly installed HVAC units. Note: MCH-02-A can be performed in conjunction with MCH-07-A Supply Fan VFD Acceptance (if applicable) since testing activities overlap
	HP-N1 Carrier 50GEQM04A2M, HP-N3 AAON RN-008-3-O-GBB and IDU-N1 Carrier 45MAHAQ24X.
Mechanical	NRCA-MCH-03-A - Constant Volume Single Zone HVAC
	HP-N1 Carrier 50GEQM04A2M, HP-N3 AAON RN-008-3-O-GBB and IDU-N1 Carrier 45MAHAQ24X.

CA Building Energy Efficiency Standards - 2025 Nonresidential Compliance | Report Version: 2025.0.000 Schema Version: rev 20250101 | Report Generated: 2026-05-13 17:18:43 Compliance ID: EnergyPro-2975-0526-0061

PBK
www.pbk.com
559-448-8400
FRESNO, CA

PARLIER HS STADIUM REPLACEMENT

603 3rd Street
Parlier, CA 93648

CLIENT PROJECT NO: 250093

DSA SUBMISSION DSA APPL. NO.: 02-124002 DSA FILE NO.: 10-H12

PARLIER UNIFIED SCHOOL DISTRICT

CLIENT
PARLIER UNIFIED SCHOOL DISTRICT

DATE	PROJECT NUMBER
YYYY/MM/DD	250093

DRAWING HISTORY

No.	Description	Date

CHECKED BY: Checker

DRAWN BY: Author

MECHANICAL
BUILDING N ALT 3 T-24

MX3.5

REGISTERED PROFESSIONAL ENGINEER — RYAN W. GARDNER — No. M34846 Exp. 6-30-28 — MECHANICAL — STATE OF CALIFORNIA

LAWRENCE ENGINEERING GROUP
4910 E. Clinton Way, Suite 101
(559) 431-0101
Fresno, CA 93727
FAX (559) 431-1362
25106

19 June 2026 8:47 AM P:\2025\25106 Parlier HS Stadium Replacement\4-Drawings\4 MVMX3.1-MX3.6 - MECHANICAL T-24.dwg rose

STATE OF CALIFORNIA
Domestic Water Heating System
CALIFORNIA ENERGY COMMISSION

CERTIFICATE OF COMPLIANCE		NRCC-PLB-E
Project Name: 25106 Parlier HS Stadium Replacement	Report Page:	(Page 3 of 6)
	Date Prepared:	5/13/2026

E. ADDITIONAL REMARKS
This table includes remarks made by the permit applicant to the Authority Having Jurisdiction.

F. DOMESTIC HOT WATER EQUIPMENT
This table is used to demonstrate compliance with mandatory equipment requirements in §110.1 and §110.3. Compliance with prescriptive requirements in §140.5(c) / §170.2(d) must also be demonstrated and with §141.0 / §180.1 / §182.2 for addition and alteration scopes.

Equipment Schedule: Water Heating Efficiency and Standby Loss

01		02		03		04		
System Name	WH-1 Bradford White#F-100T-199E-3N(A)	Space type	Nonresidential	Exception to §140.5(c)/§170.2(d)2B			Capacity-weighted Average Efficiency %	
05	06	07	08	09	10	11	12	13
Name or Item Tag	Quantity	System Status	Equipment Type	Volume (gal)	Rated Input Capacity (Btu/h)	Rated Efficiency	Minimum Efficiency Required	Maximum Standby Loss
WH-1 Bradford White#F-100T-199E-3N(A)	1	New/ Addition	Electric Instantaneous	100	199,999	0.97	Must meet Federal Minimum Requirements	Must meet Federal Minimum Requirements

[1]DOTNOTE: In systems >= 1MMBtu/h with multiple units, gas water heaters with input capacity > 100,000 Btu/h may meet 90% Et requirements via an input capacity-weighted average.
[2]DOTNOTE: Compliant equipment may be found in the Modernized Appliance Efficiency Database System (MAEDBS) on the Energy Commission website: https://cacertappliances.energy.ca.gov/Pages/Search/AdvancedSearch.aspx

STATE OF CALIFORNIA
Domestic Water Heating System
CALIFORNIA ENERGY COMMISSION

CERTIFICATE OF COMPLIANCE		NRCC-PLB-E
Project Name: 25106 Parlier HS Stadium Replacement	Report Page:	(Page 1 of 6)
Project Address: 603 3rd Street	Date Prepared:	5/13/2026

A. GENERAL INFORMATION

01	Project Location (city)	Parlier	02	Climate Zone	13

03 Occupancy Types Within Project (select all that apply):

● Retail ● Support Areas ● All Other Occupancies

B. PROJECT SCOPE
This table includes domestic water heating systems that are within the scope of the permit application and are demonstrating compliance using the prescriptive paths outlined in §140./§170.2(d) and §141.0(a)§180.1, or §141.0(b)2H /§180.2 for additions or alterations. Solar water heating systems are documented on the NRCC-SAB compliance document. Combined hydronic water heating systems are documented on the NRCC-MCH compliance document.

01	02	03	
My project consists of (check all that apply):	System Type [1,2]	System Components	
☒ New system (DHW system being installed for the first time)	Serving Nonresidential or MF/Hotel/Motel Common use area	☒ Equipment	☒ Distribution ☒ Controls
☐ System Alteration (equipment, distribution or controls)		☐ Equipment	☐ Distribution ☐ Controls

[1]DOTNOTES: Point of use water heaters, or other non-central systems used to serve nonresidential spaces, are considered individual systems.
[2] Dwelling units refers to hotel/motel guest rooms and units in a multifamily residential occupancy.
[3] DHW systems serving 2 or more dwelling units are considered "Central Systems" for multifamily and hotel/motel occupancies

C. COMPLIANCE RESULTS
Table C will indicate if the project data input into the compliance document is compliant with water heating requirements. If this table says "DOES NOT COMPLY" or "COMPLIES with Exceptional Conditions" refer to Table D. or the table indicated as not compliant for guidance.

01	02	03	04	05
Domestic Hot Water Equipment	Distribution Systems	Controls	Pool/Spa	**Compliance Results**
Table F	Table G	Table H	Table J	
Yes	Yes	Yes		COMPLIES

D. EXCEPTIONAL CONDITIONS
This table is auto-filled with uneditable comments because of selections made or data entered in tables throughout the form.

CERTIFICATE OF COMPLIANCE - NONRESIDENTIAL PERFORMANCE COMPLIANCE METHOD	NRCC-PRF-E
Nonresidential Performance Compliance Method	**(Page 18 of 18)**

Documentation Author's Declaration Statement

I. I certify that this Certificate of Compliance documentation is accurate and complete.

Documentation Author Name: Brent Yang	Documentation Author Signature: *Brent Yang*
Company: Lawrence Engineering Group	Signature Date: 2026-05-13
Address: 4910 E Clinton Way, Suite 101	CEA/ABAE/ECC Certification Identification (If applicable):
City/State/Zip: Fresno, CA 93727	Phone: (559) 431-0101

Responsible Person's Declaration statement

I certify the following under penalty of perjury, under the laws of the State of California:

1. The information provided on this Certificate of Compliance is true and correct.
2. I am eligible under Division 3 of the Business and Professions Code to accept responsibility for the building design or system design identified on this Certificate of Compliance (responsible designer).
3. The energy features and performance specifications, materials, components, and manufactured devices for the building design or system design identified on this Certificate of Compliance conform to the requirements of Title 24, Part 1 and Part 6 of the California Code of Regulations.
4. The building design features or system design features identified on this Certificate of Compliance are consistent with the information provided on other applicable compliance documents, worksheets, calculations, plans and specifications submitted to the enforcement agency for approval with this building permit application.
5. I understand that a completed signed copy of this Certificate of Compliance shall be made available with the building permit(s) issued for the building and shall be made available to the enforcement agency for all applicable inspections. I will take the necessary steps to fulfill this requirement.
6. I understand that a completed signed copy of this Certificate of Compliance is required to be included with the documentation the builder provides to the building owner at occupancy. I will take the necessary steps to fulfill this requirement.

Responsible Designer Name: Michael Schoen	Responsible Designer Signature:
Company: PBK	Date Signed:
Address: 7790 N Palm Ave 93711	License #: C-35165
City/State/Zip: Fresno, CA 93711	Title: Scope:
Phone: 559-448-8400	
Responsible Designer Name: Ryan Carlson	Responsible Designer Signature:
Company: Lawrence Engineering Group	
Address: 4910 East Clinton Way Suite 101	Date Signed: 2026-05-13
City/State/Zip: Fresno, CA 93727	License #: M34846
Phone: 559-431-0101	Title: Scope:

CERTIFICATE OF COMPLIANCE - NONRESIDENTIAL PERFORMANCE COMPLIANCE METHOD	NRCC-PRF-E
Nonresidential Performance Compliance Method	**(Page 17 of 18)**

O. DECLARATION OF REQUIRED CERTIFICATES OF ACCEPTANCE
Selections made by Documentation Author indicate which Certificates of Acceptance must be submitted for the features to be recognized for compliance. These documents must be provided to the building inspector during construction. Lighting controls and mechanical NRCAs must be completed through an Acceptance Test Technician Certification Provider (ATTCP).

Building Component [1]	Form/Title & System Name(s)
Mechanical	NRCA-MCH-05-A - Air Economizer Controls
	HP-N1 Carrier 50GEQM042M

[1]Refer to other prescriptive NRCC forms applicable to the project for additional NRCA tests required that are not included in the NRCC-PRF-E form

P. DECLARATION OF REQUIRED CERTIFICATES OF VERIFICATION
Selections made by Documentation Author indicate which Certificates of Verification must be submitted for the features to be recognized for compliance. These documents must be retained and provided to the building inspector during construction and can be found online

There are no certificates applicable to this project

STATE OF CALIFORNIA
Domestic Water Heating System
CALIFORNIA ENERGY COMMISSION

CERTIFICATE OF COMPLIANCE		NRCC-PLB-E
Project Name: 25106 Parlier HS Stadium Replacement	Report Page:	(Page 4 of 6)
Project Address: 603 3rd Street	Date Prepared:	5/13/2026

DOCUMENTATION AUTHOR'S DECLARATION STATEMENT

I certify that this Certificate of Compliance documentation is accurate and complete.

Documentation Author Name: Brent Yang	Documentation Author Signature: *Brent Yang*
Company: Lawrence Engineering Group	Signature Date: 2026-05-13
Address: 4910 E Clinton Way, Suite 101	CEA/ABA/ECC Certification Identification (if applicable):
City/State/Zip: Fresno CA 93727	Phone: (559) 431-0101

RESPONSIBLE PERSON'S DECLARATION STATEMENT

I certify the following under penalty of perjury, under the laws of the State of California:

1. The information provided on this Certificate of Compliance is true and correct.
2. I am eligible under Division 3 of the Business and Professions Code to accept responsibility for the building design or system design identified on this Certificate of Compliance (responsible designer)
3. The energy features and performance specifications, materials, components, and manufactured devices for the building design or system design identified on this Certificate of Compliance conform to the requirements of Title 24, Part 1 and Part 6 of the California Code of Regulations.
4. The building design features or system design features identified on this Certificate of Compliance are consistent with the information provided on other applicable compliance documents, worksheets, calculations, plans and specifications submitted to the enforcement agency for approval with this building permit application.
5. I will ensure that a completed signed copy of this Certificate of Compliance shall be made available with the building permit(s) issued for the building, and made available to the enforcement agency for all applicable inspections. I understand that a completed signed copy of this Certificate of Compliance is required to be included with the documentation the builder provides to the building owner at occupancy.

Responsible Person Name: Ryan Carlson	Responsible Person Signature:
Responsible Person Scope:	
Company: Lawrence Engineering Group	Date Signed: 2026-05-13
Address: 4910 East Clinton Way Suite 101	License: M34846
City/State/Zip: Fresno CA 93727	Phone: 559-431-0101

STATE OF CALIFORNIA
Domestic Water Heating System
CALIFORNIA ENERGY COMMISSION

CERTIFICATE OF COMPLIANCE		NRCC-PLB-E
Project Name: 25106 Parlier HS Stadium Replacement	Report Page:	(Page 5 of 6)
	Date Prepared:	5/13/2026

DECLARATION OF REQUIRED CERTIFICATES OF INSTALLATION
Selections have been made based on information provided in this document. If any selection have been changed by permit applicant, an explanation should be included in Table E. Additional Remarks. These documents must be provided to the building inspector during construction and can be found online

Form/Title
NRCI-PLB-E - Must be submitted for all buildings

DECLARATION OF REQUIRED CERTIFICATES OF ACCEPTANCE
There are no forms required for this project.

DECLARATION OF REQUIRED CERTIFICATES OF VERIFICATION
There are no forms required for this project.

STATE OF CALIFORNIA
Domestic Water Heating System
CALIFORNIA ENERGY COMMISSION

CERTIFICATE OF COMPLIANCE		NRCC-PLB-E
Project Name: 25106 Parlier HS Stadium Replacement	Report Page:	(Page 6 of 6)
	Date Prepared:	5/13/2026

DOMESTIC HOT WATER CONTROLS - §110.3, §120.0, §160.4(d), §170.2(d), §180.1(b)3
This table is used to demonstrate compliance with control requirements in §110.3 for all occupancies. For nonresidential occupancies, compliance is demonstrated with requirements in §120.9. For multifamily residential and hotel/motel occupancies, compliance is also demonstrated with requirements in §160.4(d) / §170.2(d).

System Name			
	Yes	Not Applicable	Requirement
01	☒	☐	Construction documents require manufacturer certification that service water-heating systems are equipped with automatic temperature controls capable of adjusting temperature settings per §110.3(a).
02	☒	☐	Systems with capacity > 167,000 BTU/H equipped with outlet temperature controls per §110.3(c)1 unless covered by California Plumbing Code §13.0.
03	☐	☒	Controls for circulating pumps or electrical heat trace systems are capable of automatically turning off the system per §110.3(c)2 unless systems serves healthcare facility.
04	☐	☒	For recirculation systems serving multiple dwelling units, design includes a mechanical or digital thermostatic master mixing valve on each distribution supply and return loop per §170.2(d) or §180.1(b)3 for additions.
05	☐	☒	For recirculation systems serving individual dwelling units, design includes manual on/off controls as specified in Reference Appendix RA4.4.9 per §170.2(d).
06	☐	☒	Combustion air positive shut-off shall be provided per §120.9(a) & §160.4(d) on all newly installed commercial boilers as follows: • Boilers with input capacity >= 2.5 MMBtu/h, in which the boiler is designed to operate with a nonpositive vent static pressure • Boilers where one stack serves two or more boilers with a total combined input capacity per stack of 2.5 MMBtu/h.
07	☐	☒	Boiler combustion air fans with motor >= 10 hp shall meet one of the following for newly installed boilers per §120.9(b) & §160.4(d)2: • The fan motor shall be driven by a variable speed drive OR • The fan motor shall include controls that limit the fan motor demand to <=30% of the total design wattage at 50% of the design air volume.
08	☐	☒	Newly installed boilers with an input capacity (d qfa/7) SMMBtu/h and a steady state full-load combustion efficiency < 90% shall maintain excess (stack-gas) oxygen concentrations <= 5% by volume on a dry basis over firing rates of 20-100%. Combustion air volume shall be controlled with respect to firing rate or flue gas oxygen concentration. Use of a common gas and combustion air control linkage or jack shaft is prohibited per §120.9(c) & §160.4(d)3.

STATE OF CALIFORNIA
Domestic Water Heating System
CALIFORNIA ENERGY COMMISSION

CERTIFICATE OF COMPLIANCE		NRCC-PLB-E
Project Name: 25106 Parlier HS Stadium Replacement	Report Page:	(Page 3 of 6)
	Date Prepared:	5/13/2026

DOMESTIC HOT WATER DISTRIBUTION SYSTEM
This table is used to demonstrate compliance for nonresidential occupancies with distribution requirements in §120.3 and §140.5. For multifamily and hotel/motel occupancies, compliance is demonstrated with requirements §110.3(c), §160.4, §170.2(d).

Mandatory Pipe Insulation All Occupancies - §120.3, §160.4

System Name			
	Yes	Not Applicable	Requirement
16	○	●	For systems serving dwelling units, pipe insulation must meet the minimum insulation requirements in Table 160.4-A (see blow) except: • Piping that penetrates framing members shall not be required to have pipe insulation for the distance of the framing penetration. Piping that penetrates metal framing shall use grommets, plugs, wrapping or other insulating material to assure that no contact is made with the metal framing. Insulation shall abut securely against all framing members • Piping installed in interior or exterior walls shall not be required to have pipe insulation if all of the requirements are met for compliance with Quality Insulation Installation (QII) as specified in the Reference Residential Appendix RA3.5. • Piping surrounded with a minimum of 1 inch of wall insulation, 2 inches of crawlspace insulation, or 4 inches of attic insulation, shall not be required to have pipe insulation.
17	●	○	For systems serving nonresidential spaces, pipe insulation for the following applications is specified to comply with Table 120.3-A1 or Table 120.3-A2 (see below) per §120.3: • Recirculating system piping, including supply and return piping of the water heater • The first ft ft of hot and cold outlet piping, including between storage tank and heat trap, for a nonrecirculating storage system • Pipes that are externally heated
18	●	○	Per §120.3(b)/ §160.4(f), pipe and appurtenance insulation shall be protected from damage, including that due to sunlight, moisture, equipment maintenance, and wind. Insulation exposed to weather shall be installed with a cover suitable for outdoor service. Pipe insulation buried below grade must be installed in a water proof and non-crushable casing or sleeve.

TABLE 160.4-A PIPE INSULATION THICKNESS

Fluid Temperature Range (°F)	Conductivity Range (Btu-in per hour per ft² per °F)	Insulation Mean Rating Temp (°F)	Nominal Pipe Diameter (in)			
			< 1	1 to < 1.5	1.5 to < 4	1.5 to < 4 Multifamily & Hotel/Motel
			Minimum Insulation Required			
105-140	0.22 - 0.28	100	1.0 in or R-7.7	1.5 in or R-12.5	1.5 in or R-11	2.0 in or R-16

PBK
FRESNO, CA
559-448-8400
www.pbk.com

PARLIER HS STADIUM REPLACEMENT
603 3rd Street
Parlier, CA 93648

CLIENT PROJECT NO: 250093
DSA SUBMISSION
DSA APPL. NO.: 02-124002 DSA FILE NO. : 10-H12

PARLIER UNIFIED SCHOOL DISTRICT

CLIENT	
PARLIER UNIFIED SCHOOL DISTRICT	
DATE: YYYY/MM/DD	PROJECT NUMBER: 250093

DRAWING HISTORY

No.	Description	Date

CHECKED BY: Checker
DRAWN BY: Author

BENJAMIN W. CARLSON — No. M34846 Exp. 6-30-28 — MECHANICAL — STATE OF CALIFORNIA

LAWRENCE ENGINEERING GROUP
4910 E. Clinton Way, Suite 101 (559) 431-0101
25106
Fresno, CA 93727 FAX (559) 431-1562

MECHANICAL BUILDING N ALT 3 T-24

MX3.6

19 June 2026 8:47 AM P:\2025\25106 Parlier HS Stadium Replacement\4 - Drawings\4 MA\MX3.1-MX3.6 - MECHANICAL T-24.dwg rose

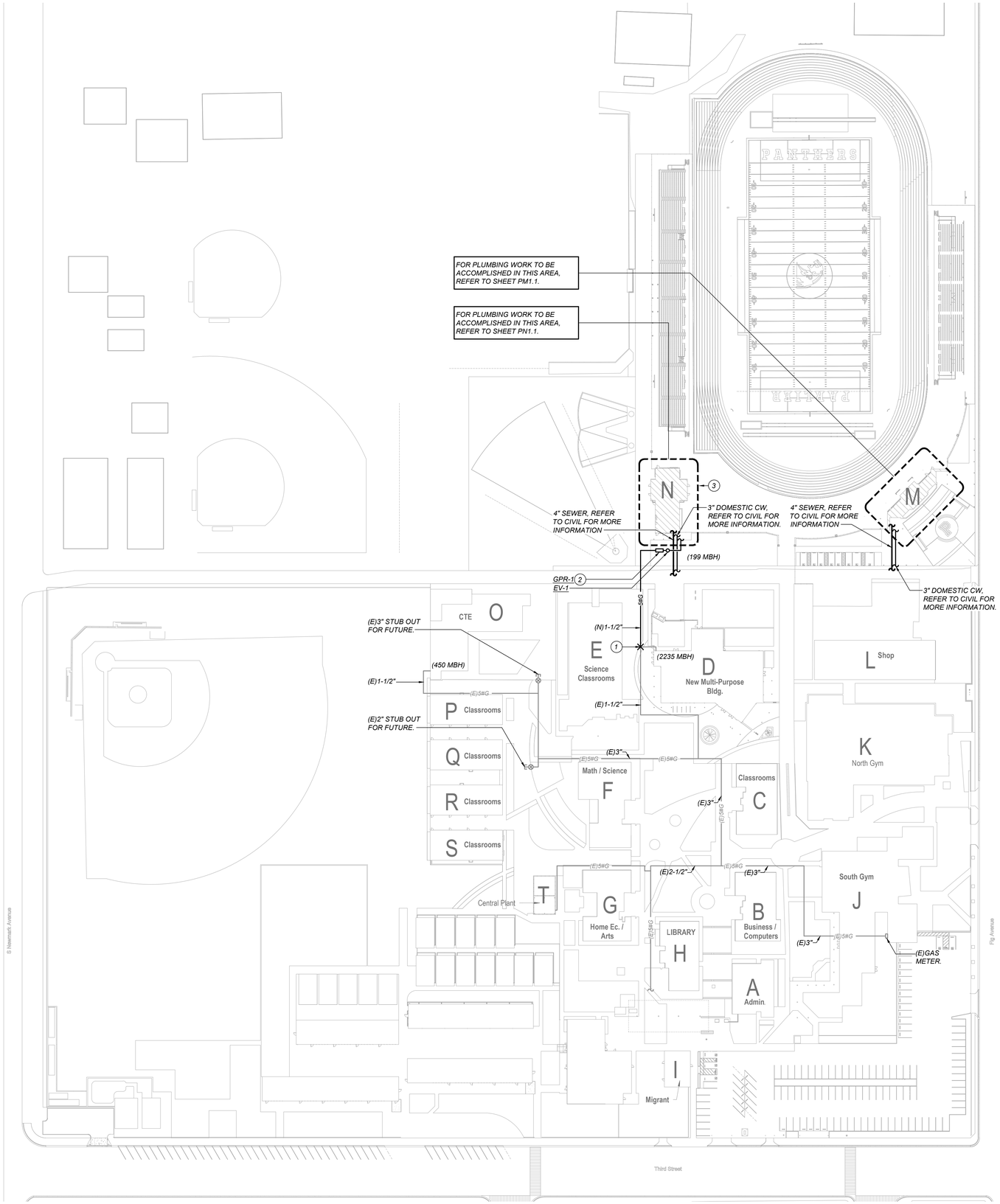

	PLUMBING LEGEND	
SYMBOL	ITEM	ABBR
	SOIL or WASTE	S or W
	VENT	V
	VENT RISER	VR
	VENT THRU ROOF	VTR
	DOMESTIC COLD WATER	CW
	DOMESTIC HOT WATER	HW
	DOMESTIC HOT WATER RETURN	HWR
—G—	LOW PRESSURE NATURAL GAS	G
— 2#G —	2 PSI GAS	2#G
— 5#G —	5 PSI GAS	5#G
—GSM—	GAS SERVICE MAIN BY THE LOCAL GAS UTILITY	GSM
—C—	CONDENSATE DRAIN	CD
—RWL—	RAIN WATER LEADER	RWL
—OD—	OVERFLOW DRAIN	OD
—SD—	STORM DRAIN	SD
—IW—	INDIRECT WASTE	IW
—F—	FIRE PROTECTION LINE	F
	EXISTING PIPING	(E)
(E)	EXISTING	
(N)	NEW	
	INVERT ELEVATION	I.E.
	ABOVE CEILING	ABV CLG
	ABOVE FLOOR	ABV FLR
	BELOW FLOOR	BEL FLR
	BELOW GRADE	BEL GR
	TYPICAL	TYP
	CONTINUATION	CONT
	DOWN	DN
	FLOOR CLEANOUT	FCO
	CLEANOUT TO GRADE	COTG
	WALL CLEANOUT	WCO
	PIPING TURN UP	
	PIPING TURN DOWN	
	POINT OF CONNECTION	POC
	HOSE BIBB	
	SHUT-OFF VALVE IN BOX	SOV
	SHUT-OFF VALVE	SOV
	SHUT-OFF VALVE IN RISER	-
	SHUT-OFF VALVE IN DROP	-
	GATE VALVE	-
	BUTTERFLY VALVE	-
	GLOBE VALVE	-
	CHECK VALVE	-
	PLUG VALVE	-
	BALL VALVE	-
	BALANCE COCK	-
	REDUCER	-
	MANHOLE	MH
	FLOW LINE	FL
	UNION	-
	RELIEF VALVE	-
	BALANCING VALVE	-
	PRESSURE GAUGE	-
	THERMOMETER	-

KEYNOTES: (THIS SHEET ONLY)

1. POC 1-1/2" 5# GAS TO (E) 1-1/2" 5# GAS AND ROUTE AS SHOWN TO NEW STADIUM BUILDING.
2. GAS PRESSURE REGULATOR IN ABV. GROUND CAGE. REFER TO DETAIL A/PX1.3 AND B/PX1.3.
3. CONTRACTOR TO REMOVE GAS FROM SPHERE OF INFLUENCE OF NEW WORK AND CAP GAS PIPING. NO INFORMATION AVAILABLE FOR EXISTING GAS PIPING OR GAS ROUTING. APPROXIMATE 1" GAS PIPE FOUND STUBBED UP IN THE MIDDLE OF THE OLD SNACK BAR BUILDING DURING SITE VISIT. REFER TO CIVIL PLANS FOR ADDITIONAL DEMOLITION INFORMATION. REFER TO GENERAL NOTES ON SHEET PX2.2 FOR ADDITIONAL REQUIREMENTS.

PBK
FRESNO, CA
559-448-8400
www.pbk.com

PARLIER HS STADIUM REPLACEMENT

CLIENT PROJECT NO: 250093
DSA SUBMISSION 02-124002 DSA FILE NO. : 10-H12
DSA APPL. NO. : 02-124002 DSA FILE NO. : 10-H12
603 3rd Street
Parlier, CA 93648

PARLIER UNIFIED SCHOOL DISTRICT

CLIENT
PARLIER UNIFIED SCHOOL DISTRICT
DATE: YYYY/MM/DD
PROJECT NUMBER: 250093
DRAWING HISTORY

No.	Description	Date

CHECKED BY: Checker
DRAWN BY: Author

REGISTERED PROFESSIONAL ENGINEER
ETHAN W. EARLSON
No. M34846
Exp. 6-30-28
MECHANICAL
STATE OF CALIFORNIA

LAWRENCE ENGINEERING GROUP
4910 E. Clinton Way, Suite 101
(559) 431-0101
25106
Fresno, CA 93727
FAX (559) 431-1362

PLUMBING SITE PLAN

PS100

19 June 2026 8:47 AM P:\2025\25106 Parlier HS Stadium Replacement\1-Drawings\5 PLANS\PS100 – PLUMBING SITE PLAN.dwg rose

BLDG. M - PLUMBING PLAN - SEWER, VENT AND CONDENSATE
PM1.1
FOR BLUEBEAM LABELING/OCR:

KEYNOTES (THIS SHEET ONLY)

1. *1" CONDENSATE DRAIN DN THRU ROOF. PROVIDE CLEANOUT PLUG AT EACH CHANGE IN DIRECTION, TYP.*
2. *1" CONDENSATE DRAIN DN IN WALL. ELBOW OUT BELOW LAVATORY , REDUCE TO 3/4" AND CONNECT TO TAILPIECE. REFER TO DETAIL G/PX1.1, TYP.*
3. *HVAC UNIT (ON ROOF). REFER TO ROOF PLAN AND MECHANICAL FOR MORE INFORMATION.*
4. *REFER TO WATER CLOSET INSTALLATION DETAIL J/PX1.1 FOR SINGLE FIXTURE INSTALLATION, TYP.*
5. *REFER TO URINAL INSTALLATION DETAIL F/PX1.1, TYP. PROVIDE 2" WCO ABV. URINAL, TYP.*
6. *3" RWL AND 3" OD DN THRU ROOF. OFFSET AND ELBOW DN. IN WALL. ELBOWED OUT TO DAYLIGHT AT 18" ABV. FINISHED GRADE. TYPICAL TRANSITION 3" RWL TO 4" BEL. GR AND ELBOW OUT WITH 2-WAY COTG. POC TO STORM AT 5'-0" OUTSIDE BUILDING. I.E. = 342.95'*
7. *WCO TYPICAL AT SINK OR LAVATORY. REFER TO WALL CLEANOUT DETAIL C/PX1.2.*

3" RWL DN. THRU ROOF. ROUTE IN CANOPY TO COLUMN. ROUTE 3" RWL DN. IN COLUMN TO BELOW FLOOR. ROLL OFF TOP OF FOOTING AND TRANSITION TO 4" BEL. GR. PROVIDE 2-WAY COTG AND POC TO STORM DRAIN AT 5'-0" OUTSIDE BLDG., TYP. FOR RWL AT CANOPY. I.E. = 342.95'

3" OD DN THRU ROOF. OFFSET IN CANOPY AND DAYLIGHT 1" THRU BOTTON SIDE OF CANOPY. PAINT TO MATCH BLDG, TYPICAL OF OD AT CANOPY.

INDOOR UNIT, REFER TO MECHANICAL.

OUTLINE OF ROOF HATCH. REFER TO ARCHITECTURAL

3" OD DN THRU ROOF, TYP.

3" RWL DN. THRU ROOF. ROUTE IN CANOPY TO COLUMN, TYP.

4" COTG. REFER TO DETAIL B/PX1.1. I.E. = 342.72'. POC AT 5'-0" OUTSIDE BUILDING. REFER TO CIVIL FOR CONTINUATION.

DROP 3" RWL DN. IN COLUMN AND CONNECT TOGETHER. CONTINUE DN. IN COLUMN.

POC TO STORM DRAIN, TYP AT RWL.

4" 2-WAY COTG. TYP. AT RWL. REFER TO DETAIL C/PX1.1

REFER TO FLOOR CLEANOUT DETAIL G/PX1.3, TYP.

FF = 345.45'

S = 0.01

2" WCO, TYP. AT LAVATORY AND SINK.

DC-1 @18" ABV. GRADE, TYP.OF (6).

TICKET BOOTH STORE M100 · WOMEN'S M102 · RESTROOM M101 · MEN'S M103 · STORAGE M105 · TICKET BOOTH, M104

1 BUILDING M - PLUMBING PLAN - SEWER, VENT AND CONDENSATE
1/4" = 1'-0"

TRUE NORTH / PLAN NORTH

LAWRENCE ENGINEERING GROUP
4910 E. Clinton Way., Suite 101 Fresno, CA 93727
(559) 431-0101 25106 FAX (559) 431-1362

PBK
FRESNO, CA 559-448-8400 www.pbk.com

PARLIER HS STADIUM REPLACEMENT

603 3rd Street
Parlier, CA 93648

CLIENT PROJECT NO: 250093
DSA SUBMISSION
DSA APPL. NO.: 02-124002 DSA FILE NO.: 10-H12

PARLIER UNIFIED SCHOOL DISTRICT

CLIENT: PARLIER UNIFIED SCHOOL DISTRICT
DATE: YYYY/MM/DD
PROJECT NUMBER: 250093

DRAWING HISTORY

No.	Description	Date

CHECKED BY: Checker
DRAWN BY: Author

REGISTERED PROFESSIONAL ENGINEER — RYAN W. LAWRENCE — No. M34846 Exp. 6-30-28 — MECHANICAL — STATE OF CALIFORNIA

BLDG. M - PLUMBING PLAN - SEWER, VENT AND CONDENSATE

PM1.1

Plot Stamp:
6/19/2026 8:30:53 AM

BLDG. M - PLUMBING PLAN - WATER AND GAS
PM1.2
FOR BLUEBEAM LABELING/OCR:

0"
1"

KEYNOTES (THIS SHEET ONLY)

1. *HVAC UNIT (ON ROOF). REFER TO ROOF PLAN AND MECHANICAL FOR MORE INFORMATION.*
2. *TEE 1/2" CW TO TRAP PRIMER TP-1. REFER TO TRAP PRIMER CONNECTION DETAIL A/PX1.3, TYP.*
3. *1/2" CW BEL. FINISHED FLOOR FROM TRAP PRIMER TO FLOOR DRAIN.*
4. *SHOCK ABSORBER ABV. CEILING WITH ACCESS PANEL, TYP.*
5. *1-1/2"CW DN IN WALL TO WATER CLOSET, REDUCE TO 1" AT ELBOW OUT OF WALL TO FIXTURE, TYP.*
6. *1-1/2"CW DN IN WALL TO URINAL, REDUCE TO 3/4" AT ELBOW OUT OF WALL TO FIXTURE, TYP.*
7. *3/4" CW PIPE UP THRU ROOF. REFER TO PLUMBING ROOF PLAN PM2.1 FOR CONTINUATION.*

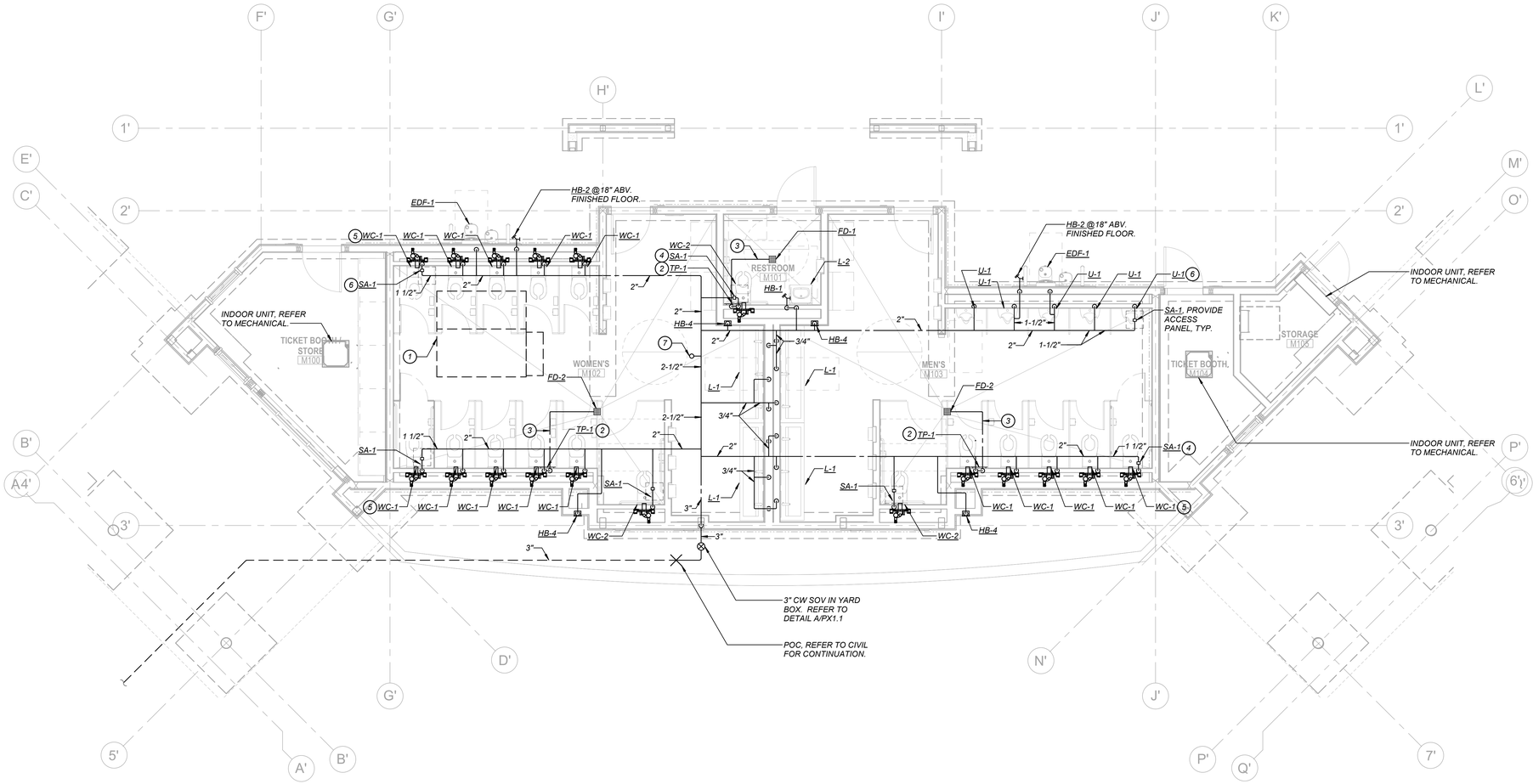

1 BUILDING M - PLUMBING PLAN - WATER
1/4" = 1'-0"

Plot Stamp:
6/19/2026 8:30:54 AM

PARLIER HS STADIUM REPLACEMENT

603 3rd Street
Parlier, CA 93648

CLIENT PROJECT NO: 250093

DSA SUBMISSION
DSA APPL. NO.: 02-124002 DSA FILE NO.: 10-H12

PBK
FRESNO, CA
559-448-8400
www.pbk.com

PARLIER UNIFIED SCHOOL DISTRICT

CLIENT	
PARLIER UNIFIED SCHOOL DISTRICT	
DATE	PROJECT NUMBER
YYYY/MM/DD	250093

DRAWING HISTORY

No.	Description	Date

CHECKED BY: Checker
DRAWN BY: Author

LICENSED PROFESSIONAL ENGINEER
RYAN W. FAIRCHILD
No. M34846
Exp. 6-30-28
MECHANICAL
STATE OF CALIFORNIA

TRUE NORTH
PLAN NORTH

LAWRENCE ENGINEERING GROUP
4910 E. Clinton Way., Suite 101 Fresno, CA 93727
(559) 431-0101 25106 FAX (559) 431-1362

BLDG. M - PLUMBING PLAN - WATER AND GAS

PM1.2

BLDG. M - PLUMBING ROOF PLAN
PM2.1
FOR BLUEBEAM LABELING/OCR:

0"
1"

KEYNOTES (THIS SHEET ONLY)

1. *3" ROOF DRAIN AND 3" OVERFLOW DRAIN DN. THRU ROOF. REFER TO SHEET PM1.1 FOR CONTINUATION.*
2. *PROVIDE 10'-0" CLEARANCE BETWEEN PLUMBING AND EXHAUST VENTS AND OUTSIDE AIR INTAKES, TYP.*

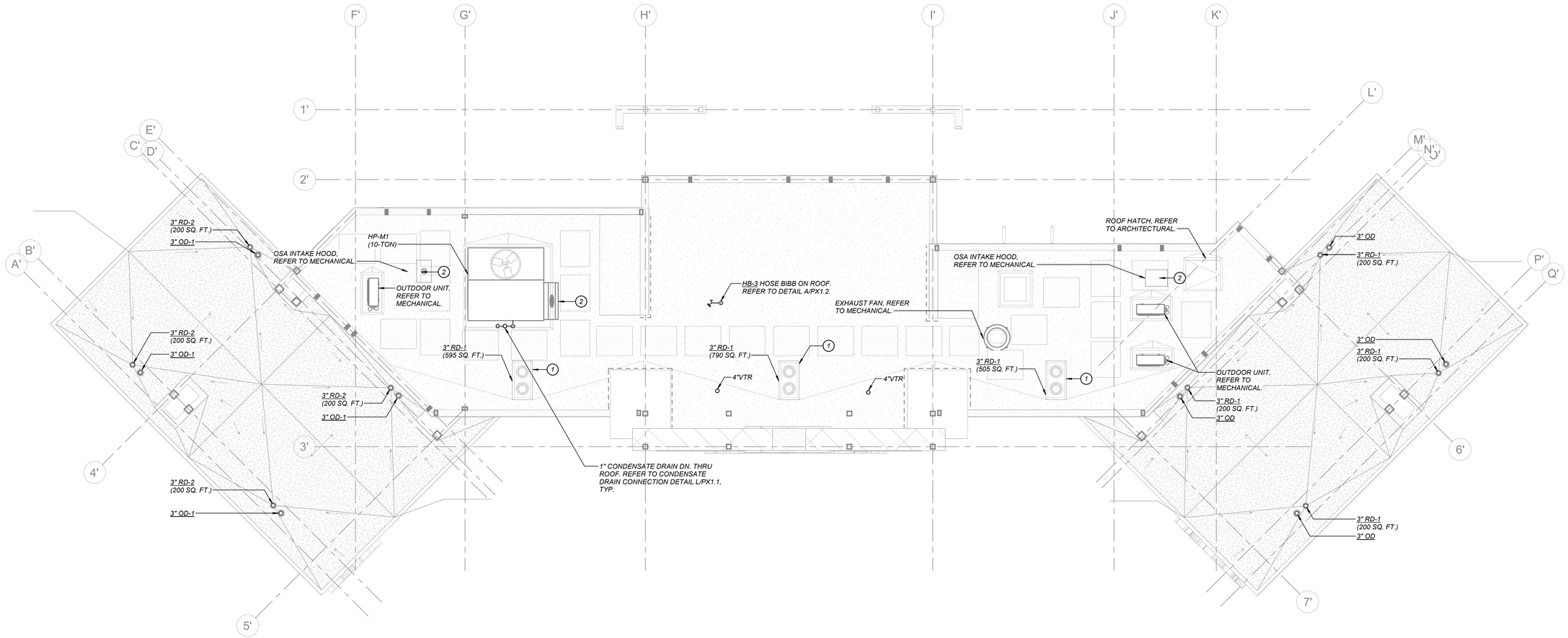

1 BUILDING M - PLUMBING ROOF PLAN
1/4" = 1'-0"

TRUE NORTH
PLAN NORTH

PBK
FRESNO, CA
559-448-8400
www.pbk.com

PARLIER HS STADIUM REPLACEMENT

603 3rd Street
Parlier, CA 93648

CLIENT PROJECT NO: 250093
DSA SUBMISSION
DSA APPL. NO.: 02-124002 DSA FILE NO.: 10-H12

PARLIER UNIFIED SCHOOL DISTRICT

CLIENT
PARLIER UNIFIED SCHOOL DISTRICT

DATE	PROJECT NUMBER
YYYY/MM/DD	250093

DRAWING HISTORY

No.	Description	Date

CHECKED BY: Checker
DRAWN BY: Author

LICENSED PROFESSIONAL ENGINEER
RYAN W. LAWRENCE
No. M34846
Exp. 6-30-28
MECHANICAL
STATE OF CALIFORNIA

LAWRENCE ENGINEERING GROUP
4910 E. Clinton Way., Suite 101
(559) 431-0101
25106
Fresno, CA 93727
FAX (559) 431-1362

BLDG. M - PLUMBING ROOF PLAN

PM2.1

Plot Stamp:
6/19/2026 8:30:55 AM

BLDG. N - PLUMBING PLAN - SEWER, VENT AND CONDENSATE
PN1.1
FOR BLUEBEAM LABELING/OCR:

0"
1"

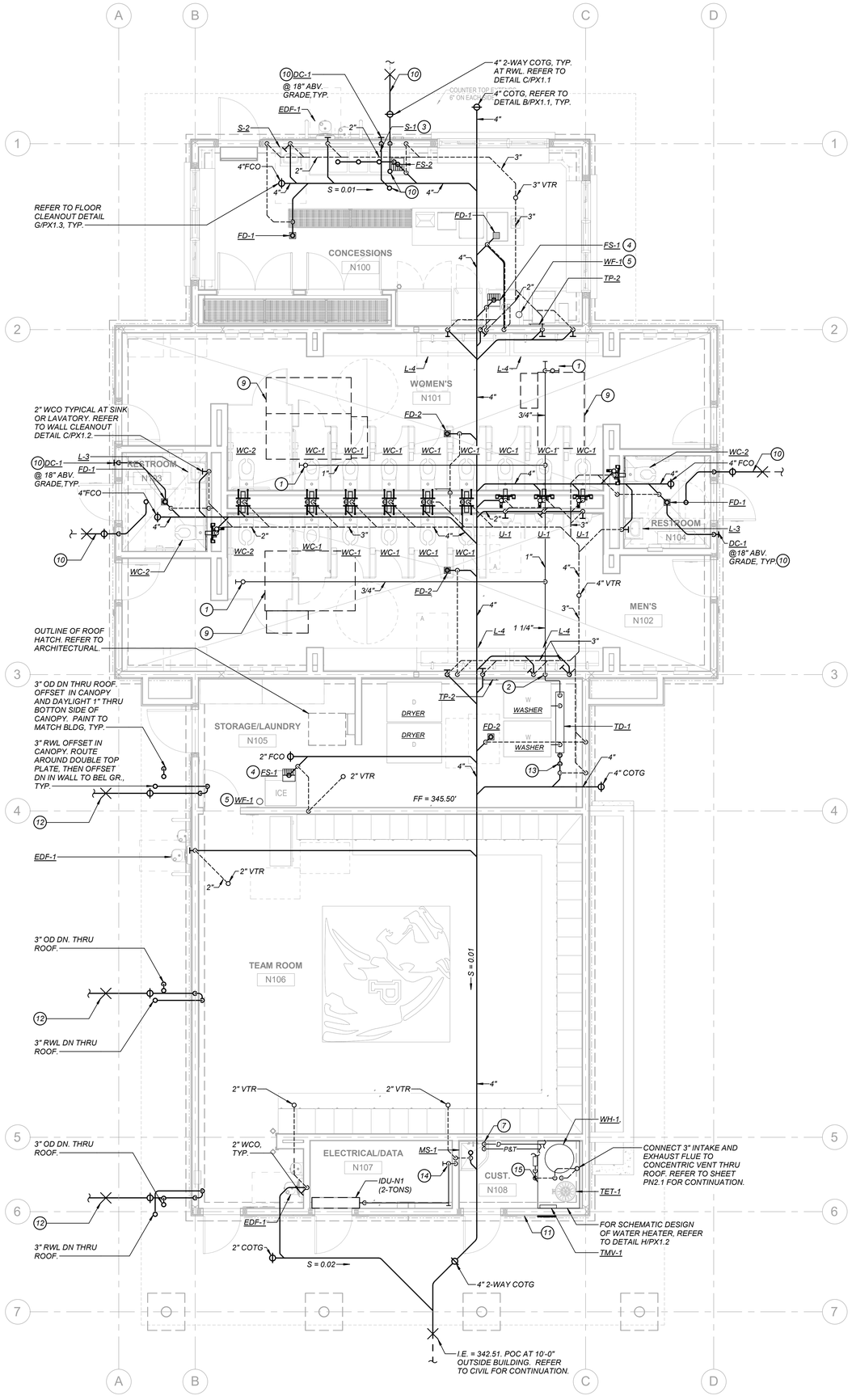

KEYNOTES (THIS SHEET ONLY)

1. *CONDENSATE DRAIN DN THRU ROOF. PROVIDE CLEANOUT PLUG AT EACH CHANGE IN DIRECTION, TYP.*
2. *1-1/4" CONDENSATE DRAIN DN IN WALL. ELBOW OUT AT 8" ABV FLR WITH TURN DN AND FULL SIZE AIR GAP TO TRENCH DRAIN. REFER TO INDIRECT WASTE AIR GAP DRAIN DETAIL H/PX1.1, TYP.*
3. *3-COMP SINK WITH INDIRECT WASTE TO FLOOR SINK AND FULL SIZE AIR GAP. REFER TO BULLETFOOT INSTALLATION DETAIL B/PX1.2.*
4. *CONNECT FULL SIZE DRAIN FROM ICE MAKER BIN TO FLOOR SINK WITH FULL SIZE AIR GAP.*
5. *MOUNT WATER FILTER ON WALL ABV OR ADJACENT TO ICE MAKER. REFER TO ARCHITECTURAL INTERIOR ELEVATIONS FOR ADDITIONAL INFORMATION. REFER TO ICE MAKER WATER FILTER INSTALLATION DETAIL P/PX1.1.*
6. *4" DRAIN WITH ELBOW DN. FROM EXTRACTOR TO TRENCH DRAIN WITH FULL SIZE AIR GAP.*
7. *ROUTE WATER HEATER PAN DRAIN AND PRESSURE AND TEMPERATURE RELIEF DRAIN TO MOP SINK WITH AIR GAP.*
8. *REFER TO WATER HEATER MOUNTING DETAIL E/PX1.2 FOR INSTALLATION REQUIREMENTS.*
9. *HVAC UNIT (ON ROOF). REFER TO ROOF PLAN AND MECHANICAL FOR MORE INFORMATION.*
10. *3" RWL AND 3" OD DN THRU ROOF. OFFSET AND ELBOWED DN. IN WALL. ELBOW OUT TO DAYLIGHT AT 18" ABV. FINISHED GRADE. TYPICAL. TRANSITION 3" RWL TO 4" BEL. GR. AND ELBOW OUT WITH 2-WAY COTG. POC TO STORM AT 5'-0" OUTSIDE BUILDING. I.E. = 343.00'*
11. *REFER TO PN1.2 FOR GAS PIPE VENTING.*
12. *3" RWL TRANSITION TO 4" RWL BEL. GR. AND ELBOW OUT WITH 2-WAY COTG. POC TO STORM AT 5'-0" OUTSIDE BLDG. I.E. = 343.00'*
13. *LAUNDRY TROUGH DRAIN TO BE INSTALLED FLUSH WITH FINISHED FLOOR ABOVE. PROVIDE 4" P-TRAP AND CONNECT 4" WASTE TO TRENCH DRAIN END OUTLET, 3" V.*
14. *3/4" CONDENSATE DRAIN DN IN WALL. ELBOW OUT AT 8" ABV RIM OF MOP SINK WITH TURN DN AND FULL SIZE AIR GAP. REFER TO INDIRECT WASTE AIR GAP DRAIN DETAIL H/PX1.1, TYP.*
15. *6" TALL HOUSEKEEPING PAD. REFER TO DETAIL E/PX1.2 AND STRUCTURAL DRAWINGS.*

1 BUILDING N - PLUMBING PLAN - SEWER, VENT AND CONDENSATE
1/4" = 1'-0"

PLAN NORTH

PBK
www.pbk.com
559-448-8400
FRESNO, CA

PARLIER HS STADIUM REPLACEMENT

603 3rd Street
Parlier, CA 93648

CLIENT PROJECT NO. 250093
DSA SUBMISSION
DSA APPL. NO.: 02-124002 DSA FILE NO.: 10-H12

PARLIER UNIFIED SCHOOL DISTRICT

CLIENT	
PARLIER UNIFIED SCHOOL DISTRICT	
DATE YYYY/MM/DD	PROJECT NUMBER 250093

DRAWING HISTORY

No.	Description	Date

CHECKED BY: Checker
DRAWN BY: Author

REGISTERED PROFESSIONAL ENGINEER
TRENT W. LAWRENCE
No. M34846
Exp. 6-30-28
MECHANICAL
STATE OF CALIFORNIA

LAWRENCE ENGINEERING GROUP
4910 E. Clinton Way., Suite 101 Fresno, CA 93727
(559) 431-0101 25106 FAX (559) 431-1362

BLDG. N - PLUMBING PLAN - SEWER, VENT AND CONDENSATE

PN1.1

Plot Stamp:
6/19/2026 8:30:57 AM

BLDG. N - PLUMBING PLAN - WATER AND GAS PN1.2

FOR BLUEBEAM LABELING/OCR:

0"

1"

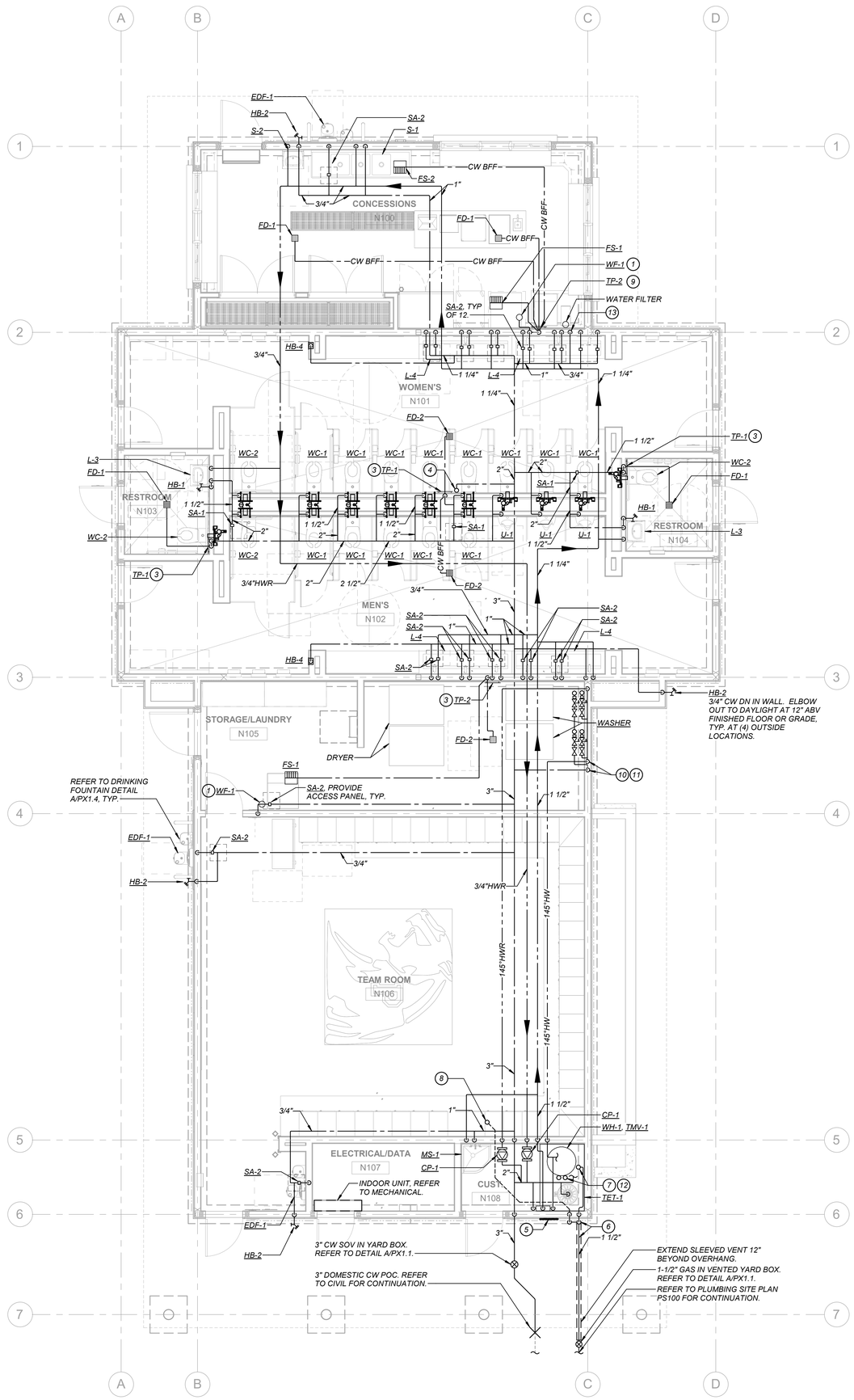

1 BUILDING N - PLUMBING PLAN - WATER
1/4" = 1'-0"

KEYNOTES (THIS SHEET ONLY)

1. *1/2" CW DN. IN WALL. ELBOW OUT AND CONNECT TO WATER FILTER ABV ICE MAKER. WATER FILTER MAY BE OFFSET ADJACENT TO ICE MAKER. COORDINATE WITH ARCHITECTURAL ELEVATIONS.*
2. *REFER TO WATER HEATER MOUNTING DETAIL E/PX1.2. FOR MORE INFORMATION.*
3. *TRAP PRIMER AT 18" AVB FLR. REFER TO DETAIL F/PX1.2.*
4. *3/4" CW PIPE UP THRU ROOF. REFER TO PLUMBING ROOF PLAN PN2.1 FOR CONTINUATION.*
5. *REFER TO GAS SIGN DETAIL N/PX1.1.*
6. *GAS PIPE TO BE SLEEVED BELOW CONCRETE SLAB. REFER TO GAS PIPE IN SLEEVE DETAIL C/PX1.3. ROUTE 1-1/2" GAS PIPING UP ABV GRADE, THRU WALL AND ELBOW UP. ROUTE OVERHEAD TO WATER HEATER. ROUTE 1-1/2" GAS VENT PIPING UP WALL AND OFFSET AS SHOWN AND VENT THRU ROOF.*
7. *REFER TO GAS DIRT LEG DETAIL M/PX1.1.*
8. *2" GAS VENT UP THRU ROOF WITH APPROVED CAP AND WATERTITE FLASHING.*
9. *TRAP PRIMER AT 18" ABV. FLOOR. REFER TO DETAIL G/PX1.2.*
10. *1-1/2" CW AND 1-1/2" 145 DEG. F. HW DROPS IN WALL BEHIND WASHERS AND DRYERS. ALL EXPOSED PIPING IS TO BE CONCEALED BEHIND WASHERS AND DRYERS. REFER TO AND INSTALL PER MANUFACTURER'S INSTALLATION INSTRUCTIONS.*
11. *PROVIDE ZURN 1" #Z6000XL PRESSURE REGULATORS AND PRESSURE GAUGE PRIOR TO THE CONNECTION OF EACH WASHER AND DRYER. SET AT 55 PSI.*
12. *3" CONCENTRIC VENT UP TO ROOF.*
13. *1/2"CW BELOW COUNTERTOP TO SHUT-OFF VALVE. WATTS #SD-3 DUAL CHECK 1/4" BACKFLOW PREVENTER. WATER FILTER, AND EXTEND PIPING TO COFFEE MAKER AND CONNECT. EXTEND FULL SIZE ATMOSPHERIC VENT DRAIN, DISCHARGE TO NEARBY FLOOR SINK WITH FULL AIR GAP.*

PLAN NORTH

PBK

www.pbk.com
559-448-8400
FRESNO, CA

PARLIER HS STADIUM REPLACEMENT

603 3rd Street
Parlier, CA 93648

CLIENT PROJECT NO: 250093

DSA SUBMISSION
DSA APPL. NO. : 02-124002 DSA FILE NO. : 10-H12

PARLIER UNIFIED SCHOOL DISTRICT

CLIENT	
PARLIER UNIFIED SCHOOL DISTRICT	
DATE: YYYY/MM/DD	PROJECT NUMBER: 250093

DRAWING HISTORY

No.	Description	Date

CHECKED BY: Checker

DRAWN BY: Author

LICENSED PROFESSIONAL ENGINEER — No. M34846 Exp. 6-30-26 — MECHANICAL — STATE OF CALIFORNIA

LAWRENCE ENGINEERING GROUP
4910 E. Clinton Way., Suite 101 (559) 431-0101
25106
Fresno, CA 93727 FAX (559) 431-1362

BLDG. N - PLUMBING PLAN - WATER AND GAS

PN1.2

Plot Stamp:
6/19/2026 8:30:59 AM

BLDG. N - PLUMBING PLAN - SEWER, VENT AND CONDENSATE - ALT 3
PN1.3
FOR BLUEBEAM LABELING/OCR:

0"
1"

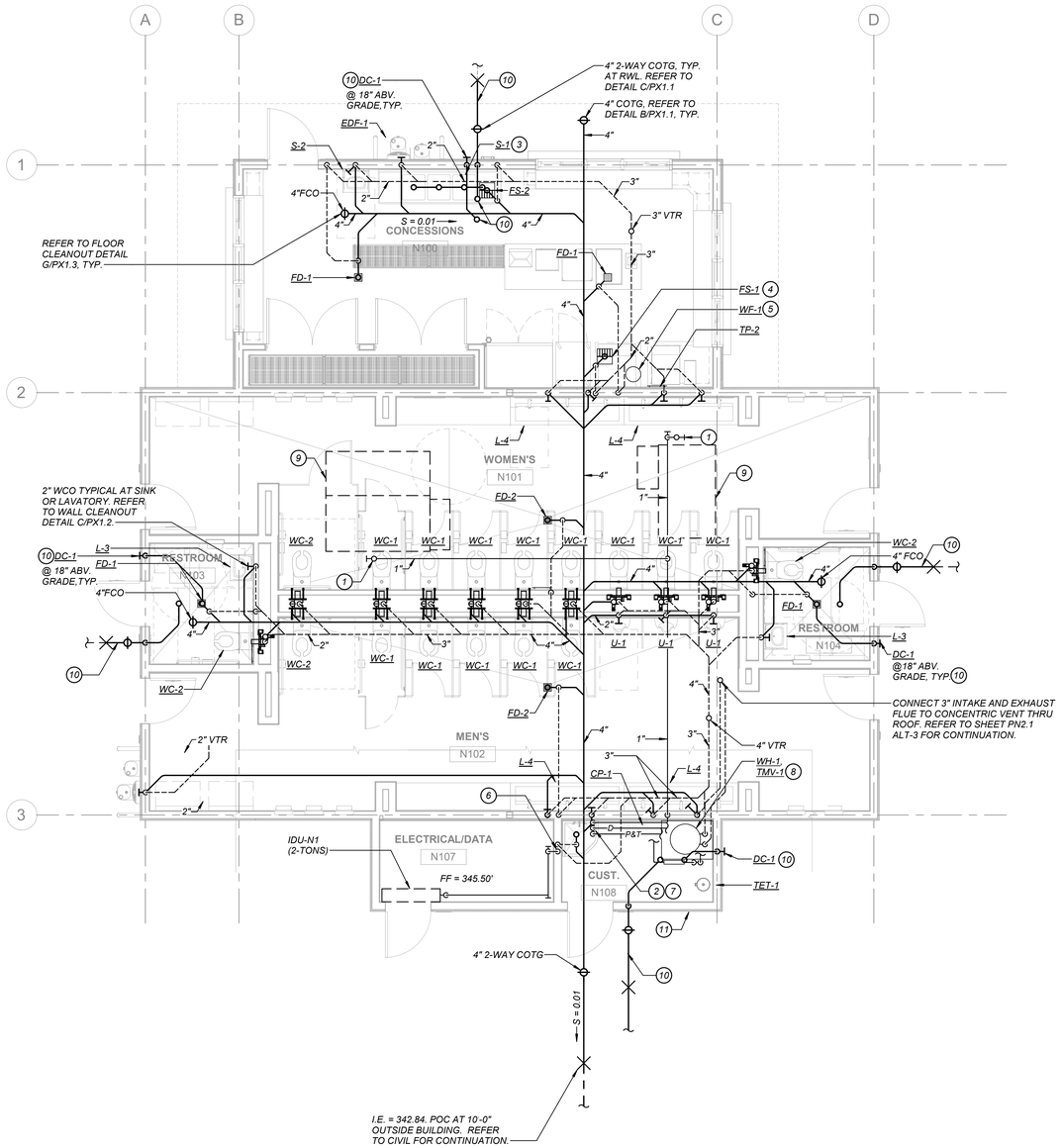

KEYNOTES (THIS SHEET ONLY)

1. *CONDENSATE DRAIN DN THRU ROOF. PROVIDE CLEANOUT PLUG AT EACH CHANGE IN DIRECTION, TYP.*
2. *1" CONDENSATE DRAIN DN IN WALL. ELBOW OUT AT 8" ABV RIM OF MOP SINK WITH TURN DN AND FULL SIZE AIR GAP. REFER TO INDIRECT WASTE AIR GAP DRAIN DETAIL H/PX1.1, TYP.*
3. *3-COMP SINK WITH INDIRECT WASTE TO FLOOR SINK AND FULL SIZE AIR GAP. REFER TO BULLETFOOT INSTALLATION DETAIL B/PX1.2.*
4. *CONNECT FULL SIZE DRAIN FROM ICE MAKER BIN TO FLOOR SINK WITH FULL SIZE AIR GAP.*
5. *MOUNT WATER FILTER ON WALL ABV OR ADJACENT TO ICE MAKER. REFER TO ARCHITECTURAL INTERIOR ELEVATIONS FOR ADDITIONAL INFORMATION. REFER TO ICE MAKER WATER FILTER INSTALLATION DETAIL P/PX1.1.*
6. *3/4" CONDENSATE DRAIN DN IN WALL. ELBOW OUT ABV RIM OF MOP SINK WITH TURN DN AND FULL SIZE AIR GAP. REFER TO INDIRECT WASTE AIR GAP DRAIN DETAIL H/PX1.1, TYP.*
7. *ROUTE WATER HEATER PAN DRAIN AND PRESSURE AND TEMPERATURE RELIEF DRAIN TO MOP SINK WITH AIR GAP.*
8. *REFER TO WATER HEATER MOUNTING DETAIL H/PX1.3 FOR INSTALLATION REQUIREMENTS.*
9. *HVAC UNIT (ON ROOF). REFER TO ROOF PLAN AND MECHANICAL FOR MORE INFORMATION.*
10. *3" RWL AND 3" OD DN THRU ROOF. OFFSET AND ELBOWED DN. IN WALL. ELBOW OUT TO DAYLIGHT AT 18" ABV. FINISHED GRADE, TYPICAL. TRANSITION 3" RWL TO 4" BEL. GR. AND ELBOW OUT WITH 2-WAY COTG. POC TO STORM AT 5'-0" OUTSIDE BUILDING. I.E. = 343.00'*
11. *REFER TO PN1.4 FOR GAS PIPE VENTING.*
12. *3" RWL TRANSITION TO 4" RWL BEL. GR. AND ELBOW OUT WITH 2-WAY COTG. POC TO STORM AT 5'-0" OUTSIDE BLDG. I.E. = 343.00'*

PLAN NORTH

1 BUILDING N - PLUMBING PLAN - SEWER, VENT AND CONDENSATE - ALT 3
1/4" = 1'-0"

Plot Stamp:
6/19/2026 8:34:01 AM

PBK
FRESNO, CA
559-448-8400
www.pbk.com

PARLIER HS STADIUM REPLACEMENT

603 3rd Street
Parlier, CA 93648

CLIENT PROJECT NO: 250093
DSA SUBMISSION
DSA APPL. NO. : 02-124002 DSA FILE NO. : 10-H12

PARLIER UNIFIED SCHOOL DISTRICT

CLIENT	
PARLIER UNIFIED SCHOOL DISTRICT	
DATE	PROJECT NUMBER
YYYY/MM/DD	250093

DRAWING HISTORY

No.	Description	Date
1	Revision 1	Date 1

CHECKED BY: Checker
DRAWN BY: Author

LICENSED PROFESSIONAL ENGINEER
RYAN W. PAPE
No. M34846
Exp. 6-30-28
MECHANICAL
STATE OF CALIFORNIA

LAWRENCE ENGINEERING GROUP
4910 E. Clinton Way., Suite 101 Fresno, CA 93727
(559) 431-0101 25106 FAX (559) 431-1362

BLDG. N - PLUMBING PLAN - SEWER, VENT AND CONDENSATE - ALT 3

PN1.3

BLDG. N - PLUMBING PLAN - WATER AND GAS - ALT 3
PN1.4
FOR BLUEBEAM LABELING/OCR:

0"
1"

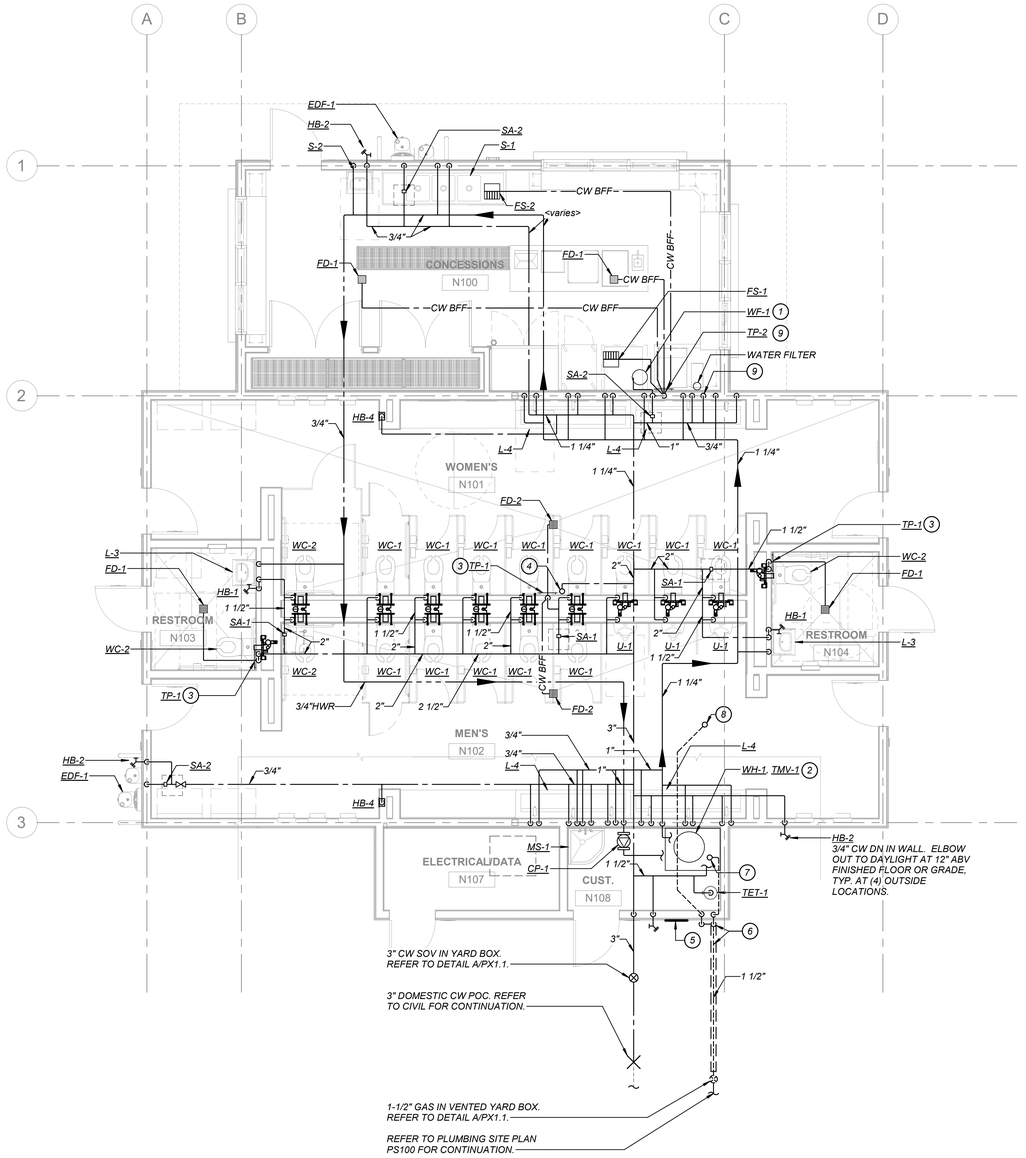

KEYNOTES (THIS SHEET ONLY)

1. *1/2" CW DN. IN WALL. ELBOW OUT AND CONNECT TO WATER FILTER ABV ICE MAKER. WATER FILTER MAY BE OFFSET ADJACENT TO ICE MAKER. COORDINATE WITH ARCHITECTURAL ELEVATIONS.*
2. *REFER TO WATER HEATER MOUNTING DETAIL H/PX1.3. FOR MORE INFORMATION.*
3. *TRAP PRIMER AT 18" AVB FLR. REFER TO DETAIL F/PX1.2.*
4. *3/4" CW PIPE UP THRU ROOF. REFER TO PLUMBING ROOF PLAN PN2.1 FOR CONTINUATION.*
5. *REFER TO GAS SIGN DETAIL N/PX1.1.*
6. *GAS PIPE TO BE SLEEVED BELOW CONCRETE SLAB. REFER TO GAS PIPE IN SLEEVE DETAIL C/PX1.3. ROUTE 1-1/2" GAS PIPING UP ABV GRADE, THRU WALL AND ELBOW UP. ROUTE OVERHEAD TO WATER HEATER. ROUTE 1-1/2" GAS VENT PIPING UP WALL AND OFFSET AS SHOWN AND VENT THRU ROOF.*
7. *REFER TO GAS DIRT LEG DETAIL M/PX1.1.*
8. *2" GAS VENT UP THRU ROOF WITH APPROVED CAP AND WATERTITE FLASHING.*
9. *TRAP PRIMER AT 18" ABV. FLOOR. REFER TO DETAIL G/PX1.2.*
10. *1/2"CW BELOW COUNTERTOP TO SHUT-OFF VALVE. WATTS #SD-3 DUAL CHECK 1/4" BACKFLOW PREVENTER, WATER FILTER, AND EXTEND PIPING TO COFFEE MAKER AND CONNECT. EXTEND FULL SIZE ATMOSPHERIC VENT DRAIN, DISCHARGE TO NEARBY FLOOR SINK WITH FULL AIR GAP.*

1 BUILDING N - PLUMBING PLAN - WATER AND GAS - ALT 3
1/4" = 1'-0"

PLAN NORTH

PBK
www.pbk.com
559-448-8400
FRESNO, CA

PARLIER HS STADIUM REPLACEMENT

603 3rd Street
Parlier, CA 93648

CLIENT PROJECT NO: 250093
DSA SUBMISSION
DSA APPL. NO. : 02-124002 DSA FILE NO. : 10-H12

PARLIER UNIFIED SCHOOL DISTRICT

CLIENT	
PARLIER UNIFIED SCHOOL DISTRICT	
DATE	PROJECT NUMBER
YYYY/MM/DD	250093

DRAWING HISTORY

No.	Description	Date

CHECKED BY: Checker
DRAWN BY: Author

LICENSED PROFESSIONAL ENGINEER
RYAN W. PARK
No. M34846
Exp. 6-30-26
MECHANICAL
STATE OF CALIFORNIA

LAWRENCE ENGINEERING GROUP
4910 E. Clinton Way., Suite 101 (559) 431-0101
25106
Fresno, CA 93727 FAX (559) 431-1362

BLDG. N - PLUMBING PLAN - WATER AND GAS - ALT 3

PN1.4

Plot Stamp:
6/19/2026 8:34:03 AM

BLDG. N - PLUMBING ROOF PLAN
PN2.1
FOR BLUEBEAM LABELING/OCR:

0"
1"

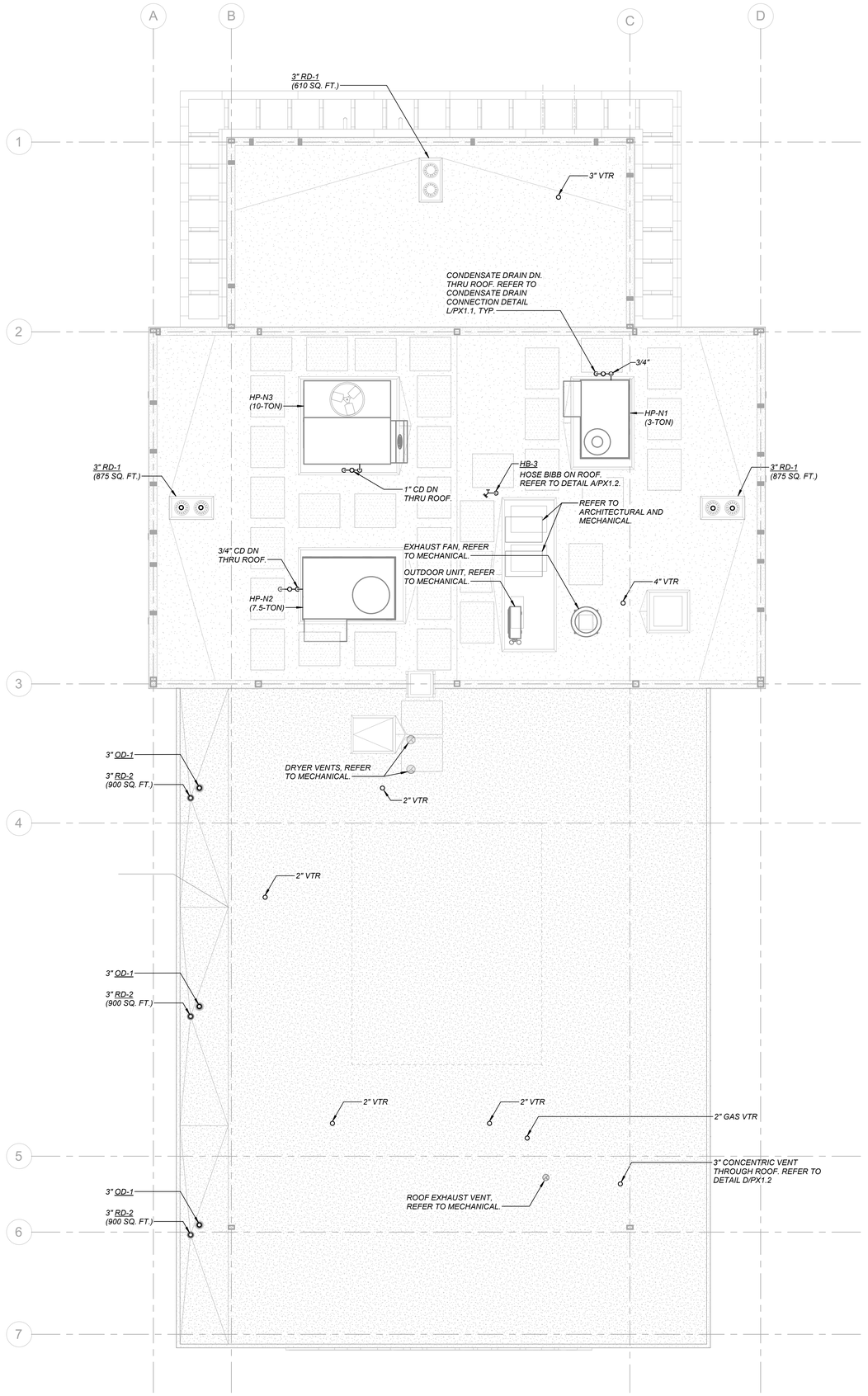

1 BUILDING N - PLUMBING ROOF PLAN
1/4" = 1'-0"

PLAN NORTH

PBK
FRESNO, CA
559-448-8400
www.pbk.com

PARLIER HS STADIUM REPLACEMENT

603 3rd Street
Parlier, CA 93648

CLIENT PROJECT NO: 250093
DSA SUBMISSION
DSA APPL. NO. : 02-124002 DSA FILE NO. : 10-H12

PARLIER UNIFIED SCHOOL DISTRICT

CLIENT	
PARLIER UNIFIED SCHOOL DISTRICT	
DATE	PROJECT NUMBER
YYYY/MM/DD	250093

DRAWING HISTORY

No.	Description	Date

CHECKED BY: Checker
DRAWN BY: Author

REGISTERED PROFESSIONAL ENGINEER
No. M34846
Exp. 6-30-26
MECHANICAL
STATE OF CALIFORNIA

LAWRENCE ENGINEERING GROUP
4910 E. Clinton Way., Suite 101
(559) 431-0101
Fresno, CA 93727
FAX (559) 431-1362
25106

BLDG. N - PLUMBING ROOF PLAN

PN2.1

Plot Stamp:
6/19/2026 8:31:00 AM

BLDG. N - PLUMBING ROOF PLAN - ALT 3
PN2.1
FOR BLUEBEAM LABELING/OCR:

0"
1"

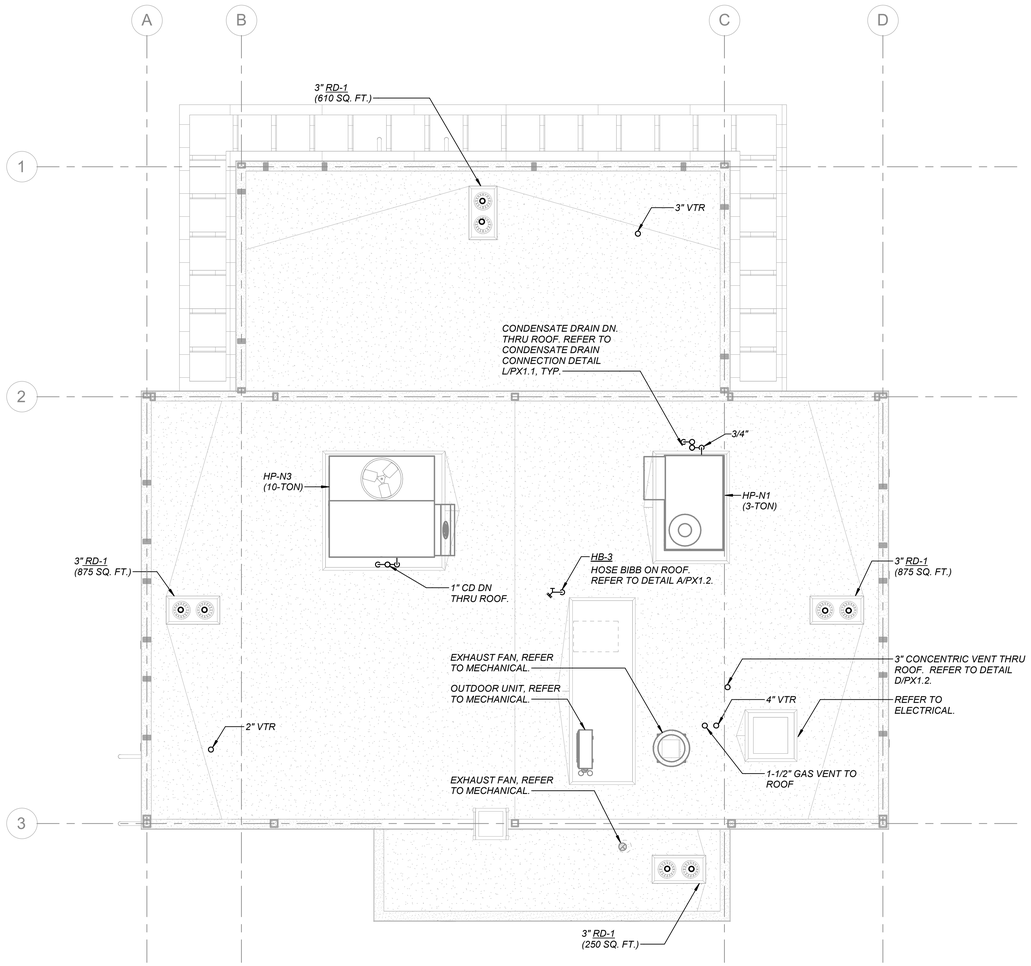

1 BUILDING N - PLUMBING ROOF PLAN - ALT 3
1/4" = 1'-0"

PLAN NORTH

PBK
FRESNO, CA
559-448-8400
www.pbk.com

PARLIER HS STADIUM REPLACEMENT
603 3rd Street
Parlier, CA 93648

CLIENT PROJECT NO: 250093
DSA SUBMISSION
DSA APPL. NO. : 02-124002 DSA FILE NO. : 10-H12

PARLIER UNIFIED SCHOOL DISTRICT

CLIENT	
PARLIER UNIFIED SCHOOL DISTRICT	
DATE: YYYY/MM/DD	PROJECT NUMBER: 250093

DRAWING HISTORY

No.	Description	Date

CHECKED BY: Checker
DRAWN BY: Author

LICENSED PROFESSIONAL ENGINEER
BRYAN W. LAWRENCE
No. M34846
Exp. 6-30-26
MECHANICAL
STATE OF CALIFORNIA

LAWRENCE ENGINEERING GROUP
4910 E. Clinton Way., Suite 101
(559) 431-0101
25106
Fresno, CA 93727
FAX (559) 431-1362

BLDG. N - PLUMBING ROOF PLAN - ALT 3

PN2.2

Plot Stamp:
6/19/2026 8:34:04 AM

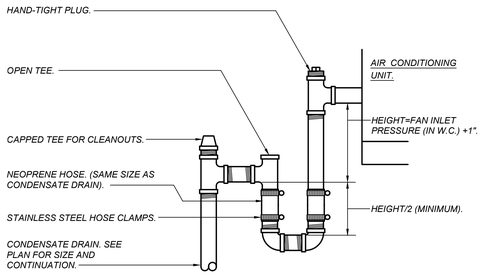

CONDENSATE DRAIN CONNECTION DETAIL

L / PX1.1

SCALE: NONE

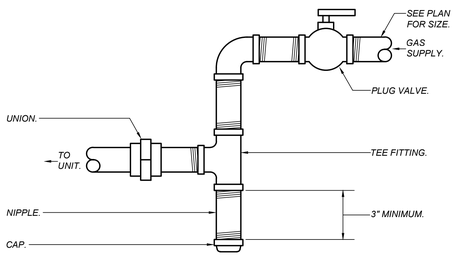

GAS PIPING DIRT LEG DETAIL

M / PX1.1

SCALE: NONE



NOTE:
SIGN TO BE CONSPICUOUSLY LOCATED ON EXTERIOR WALL ABOVE BUILDING GAS SHUT-OFF VALVE AS INDICATED ON FLOOR PLAN.

GAS VALVE SIGN DETAIL

N / PX1.1

SCALE: NONE

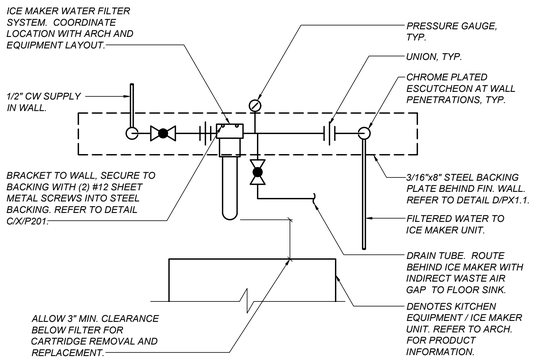

ICE MAKER WATER FILTER SYSTEM DETAIL

O / PX1.1

SCALE: NONE

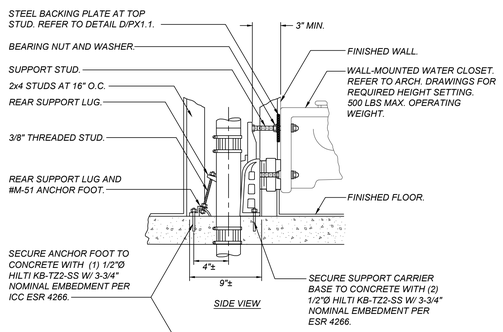

SINGLE WATER CLOSET SUPPORT DETAIL

J / PX1.1

SCALE: NONE

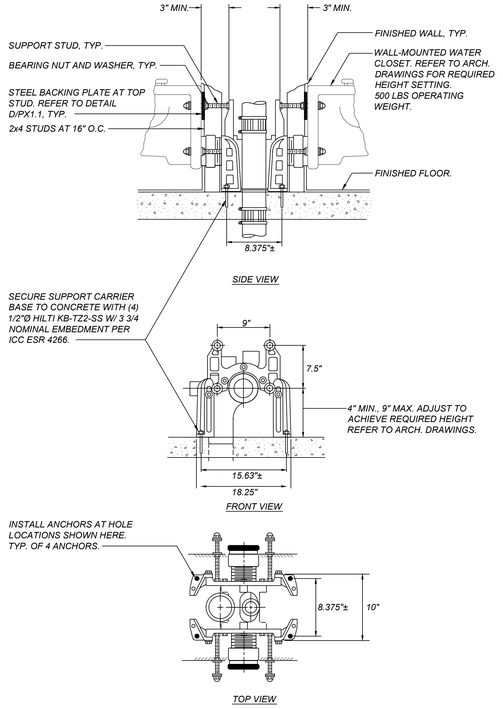

DOUBLE WATER CLOSET SUPPORT DETAIL

K / PX1.1

SCALE: NONE

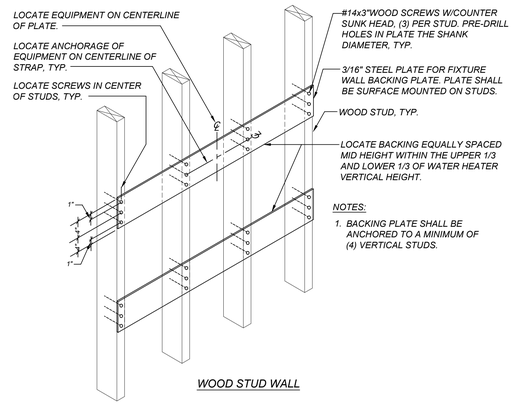

WATER HEATER SUPPORT BACKING PLATE DETAIL

E / PX1.1

SCALE: NONE

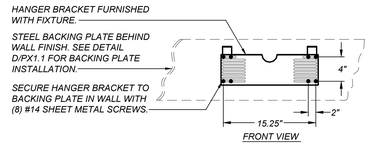

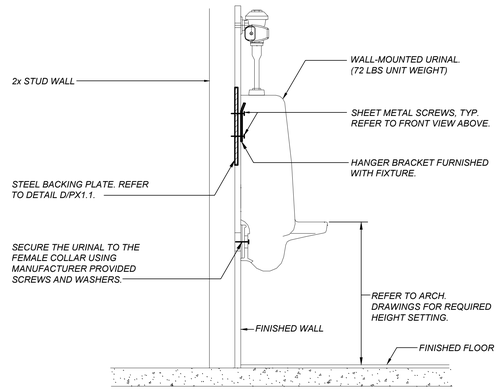

URINAL SUPPORT DETAIL

F / PX1.1

SCALE: NONE

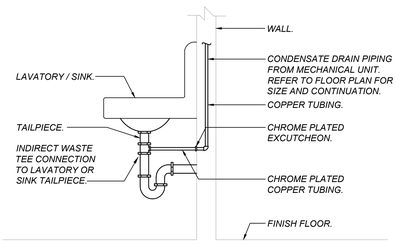

CONDENSATE TERMINATION TO TAILPIECE

G / PX1.1

SCALE: NONE

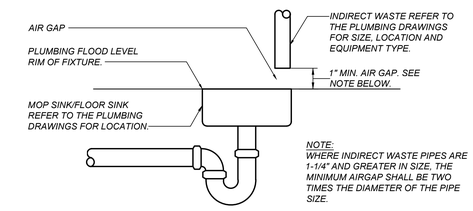

NOTE:
WHERE INDIRECT WASTE PIPES ARE 1-1/4" AND GREATER IN SIZE, THE MINIMUM AIRGAP SHALL BE TWO TIMES THE DIAMETER OF THE PIPE SIZE.

INDIRECT WASTE AIR GAP DRAIN DETAIL

H / PX1.1

SCALE: NONE

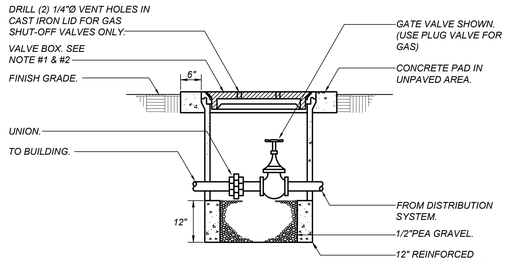

NOTE:
1. ALL SHUT-OFF VALVE BOXES WITHIN 10'-0" OF EACH OTHER SHALL BE LINED UP WITH EACH OTHER AND PARALLEL TO SIDEWALK OR BUILDING WALL.

2. FOR FOOT TRAFFIC AREAS, PROVIDE CHRISTY B03 BOX WITH CAST IRON LID. FOR ROADWAYS, PROVIDE H20 RATED CHRISTY BOX G05 OR LARGER AS NECESSARY WITH H20 CAST IRON LID. REFER TO FLOOR PLAN FOR LOCATION. LABEL LID W/VALVE USE (GAS OR WATER).

SHUT-OFF VALVE IN BOX DETAIL

A / PX1.1

SCALE: NONE

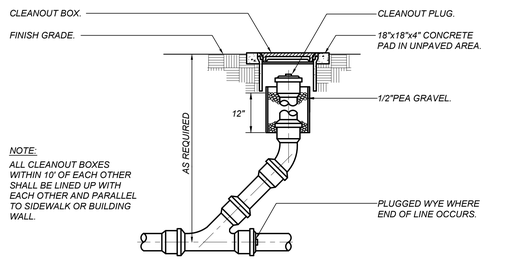

NOTE:
ALL CLEANOUT BOXES WITHIN 10' OF EACH OTHER SHALL BE LINED UP WITH EACH OTHER AND PARALLEL TO SIDEWALK OR BUILDING WALL.

CLEANOUT TO GRADE DETAIL

B / PX1.1

SCALE: NONE

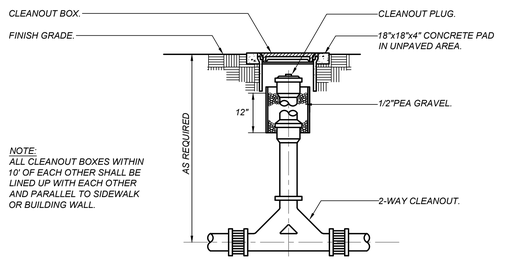

NOTE:
ALL CLEANOUT BOXES WITHIN 10' OF EACH OTHER SHALL BE LINED UP WITH EACH OTHER AND PARALLEL TO SIDEWALK OR BUILDING WALL.

2-WAY SURFACE CLEANOUT DETAIL

C / PX1.1

SCALE: NONE

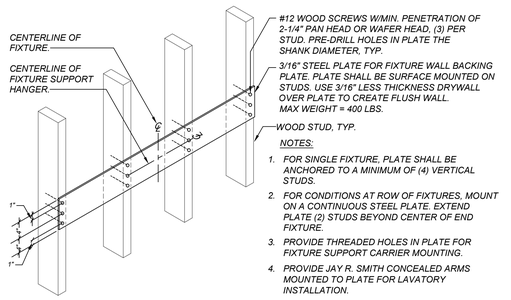

NOTES:
1. FOR SINGLE FIXTURE, PLATE SHALL BE ANCHORED TO A MINIMUM OF (4) VERTICAL STUDS.
2. FOR CONDITIONS AT ROW OF FIXTURES, MOUNT ON A CONTINUOUS STEEL PLATE. EXTEND PLATE (2) STUDS BEYOND CENTER OF END FIXTURE.
3. PROVIDE THREADED HOLES IN PLATE FOR FIXTURE SUPPORT CARRIER MOUNTING.
4. PROVIDE JAY R. SMITH CONCEALED ARMS MOUNTED TO PLATE FOR LAVATORY INSTALLATION.

WOOD STUD WALL

FIXTURE SUPPORT BACKING PLATE DETAIL

D / PX1.1

SCALE: NONE

PBK

LAWRENCE ENGINEERING GROUP
4910 E. Clinton Way, Suite 101
(559) 431-0101
25106
Fresno, CA 93727
FAX (559) 431-1562

www.pbk.com
559-448-8400
FRESNO, CA

PARLIER HS STADIUM REPLACEMENT

CLIENT PROJECT NO: 250093

DSA SUBMISSION

DSA APPL. NO.: 02-124002 DSA FILE NO.: 10-H12

603 3rd Street
Parlier, CA 93648

PARLIER UNIFIED SCHOOL DISTRICT

CLIENT	
PARLIER UNIFIED SCHOOL DISTRICT	
DATE: YYYY/MM/DD	PROJECT NUMBER: 250093

DRAWING HISTORY

No.	Description	Date

CHECKED BY: Checker

DRAWN BY: Author

BRIAN W. EARLEY — No. M34846 — Exp. 6-30-28 — REGISTERED PROFESSIONAL ENGINEER — MECHANICAL — STATE OF CALIFORNIA

PLUMBING DETAILS

PX1.1

19 June 2026 8:48 AM P:\2025\25106 Parlier HS Stadium Replacement\4-Drawings\5 PX\PX1.1 – 1-4 – PLUMBING DETAILS.dwg rose

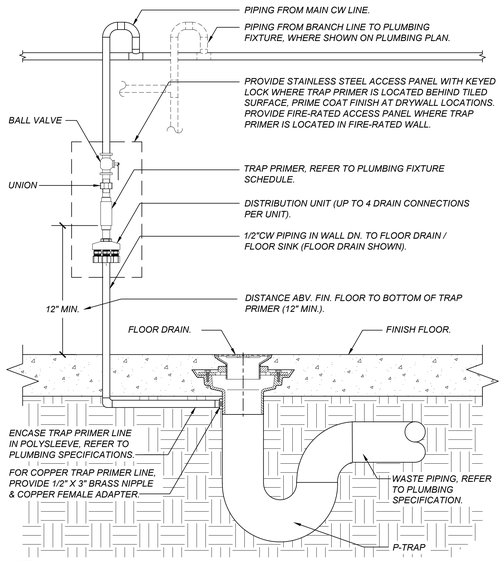

NOTE:
REFER TO MANUFACTURER'S INSTALLATION REQUIREMENTS FOR ELEVATION OF TRAP PRIMER VS. LENGTH OF RUN TO DRAINS. TRAP PRIMER ELEVATION TO BE INCREASED IN HEIGHT ABOVE FINISHED FLOOR FOR RUNS OVER 20'-0". REFER TO PLUMBING PLANS FOR SIZING.

TRAP PRIMER CONNECTION DETAIL

F / PX1.2

SCALE: NONE

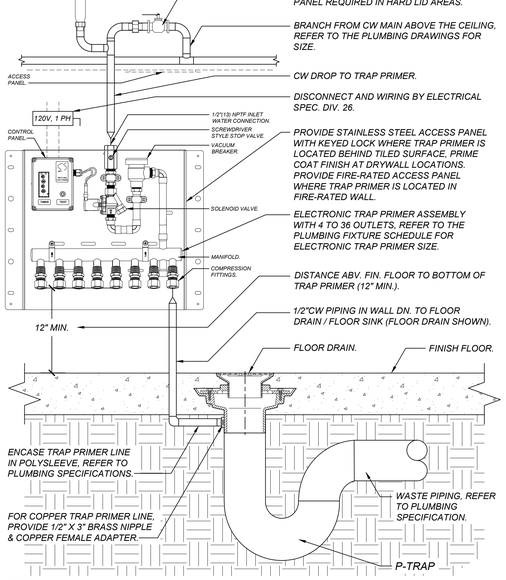

NOTE:
REFER TO MANUFACTURER'S INSTALLATION REQUIREMENTS FOR ELEVATION OF TRAP PRIMER VS. LENGTH OF RUN TO DRAINS. TRAP PRIMER ELEVATION TO BE INCREASED IN HEIGHT ABOVE FINISHED FLOOR FOR RUNS OVER 20'-0". REFER TO PLUMBING PLANS FOR SIZING.

ELECTRONIC TRAP PRIMER CONNECTION

G / PX1.2

SCALE: NONE

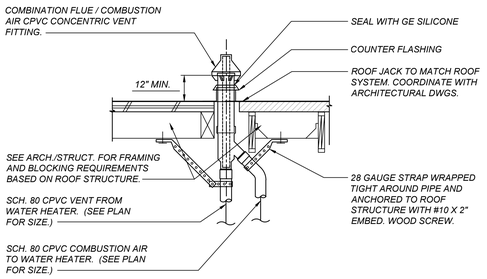

CONCENTRIC VENT THRU ROOF DETAIL

D / PX1.2

SCALE: NONE

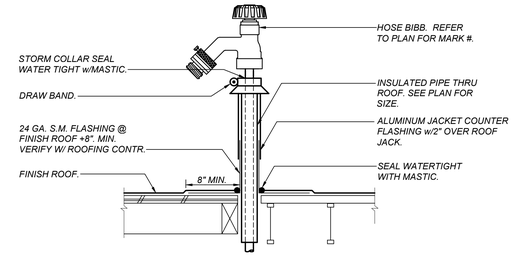

PIPE THRU ROOF DETAIL - INSULATED

A / PX1.2

SCALE: NONE

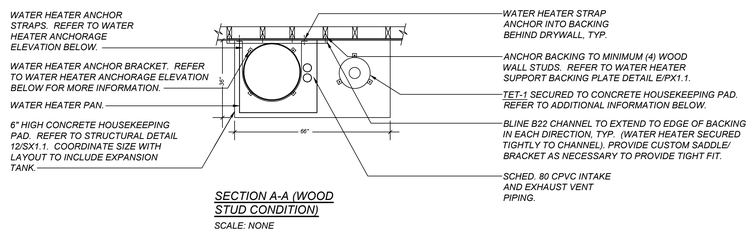

SECTION A-A (WOOD STUD CONDITION)

SCALE: NONE

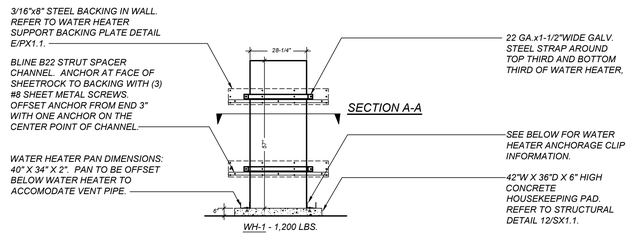

WATER HEATER ANCHORAGE ELEV.

SCALE: NONE

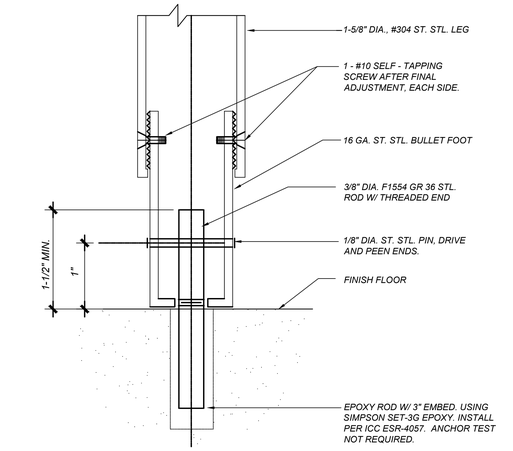

BULLET FOOT INSTALLATION DETAIL

B / PX1.2

SCALE: NONE

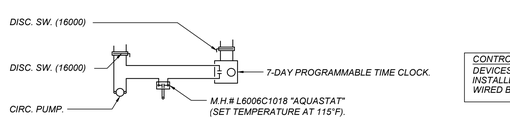

CONTROL WIRING (*)
DEVICES PROVIDED & INSTALLED BY PLUMBING; WIRED BY ELECTRICAL.

CONTROL WIRING DIAGRAM

SCALE: NONE

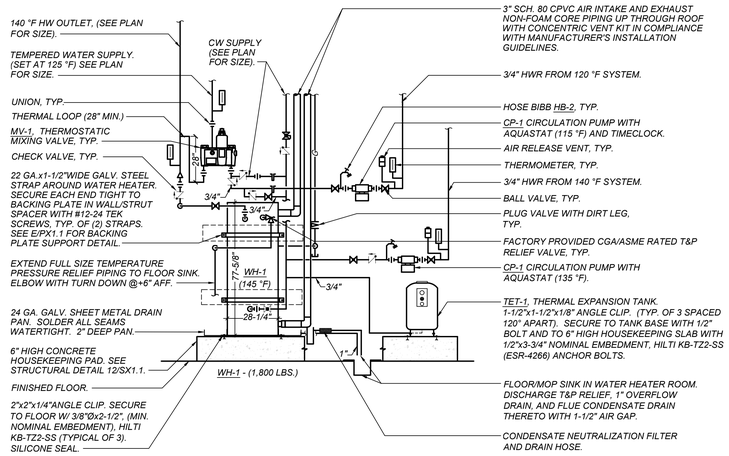

GAS WATER HEATER DETAIL (WH-1)

E / PX1.2

SCALE: NONE

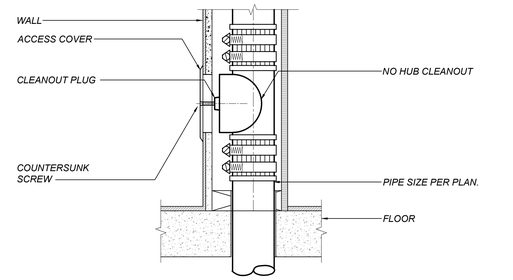

WALL CLEANOUT

C / PX1.2

SCALE: NONE

PBK
www.pbk.com
559-448-8400
FRESNO, CA

PARLIER HS STADIUM REPLACEMENT

603 3rd Street
Parlier, CA 93648

CLIENT PROJECT NO: 250093

DSA SUBMISSION

DSA APPL. NO.: 02-124002 DSA FILE NO.: 10-H12

PARLIER UNIFIED SCHOOL DISTRICT

CLIENT	
PARLIER UNIFIED SCHOOL DISTRICT	
DATE: YYYY/MM/DD	PROJECT NUMBER: 250093

DRAWING HISTORY

No.	Description	Date

CHECKED BY: Checker

DRAWN BY: Author

SEAL: REGISTERED PROFESSIONAL ENGINEER — BRIAN W. EARLEY — No. M34846 Exp. 6-30-28 — MECHANICAL — STATE OF CALIFORNIA

LAWRENCE ENGINEERING GROUP
4910 E. Clinton Way, Suite 101 Fresno, CA 93727
(559) 431-0101 FAX (559) 431-1562
25106

PLUMBING DETAILS

PX1.2

19 June 2026 8:48 AM P:\2025\25106 Parlier HS Stadium Replacement\4-Drawings\5 PX\PX1.1 – 1.4 – PLUMBING DETAILS.dwg rose

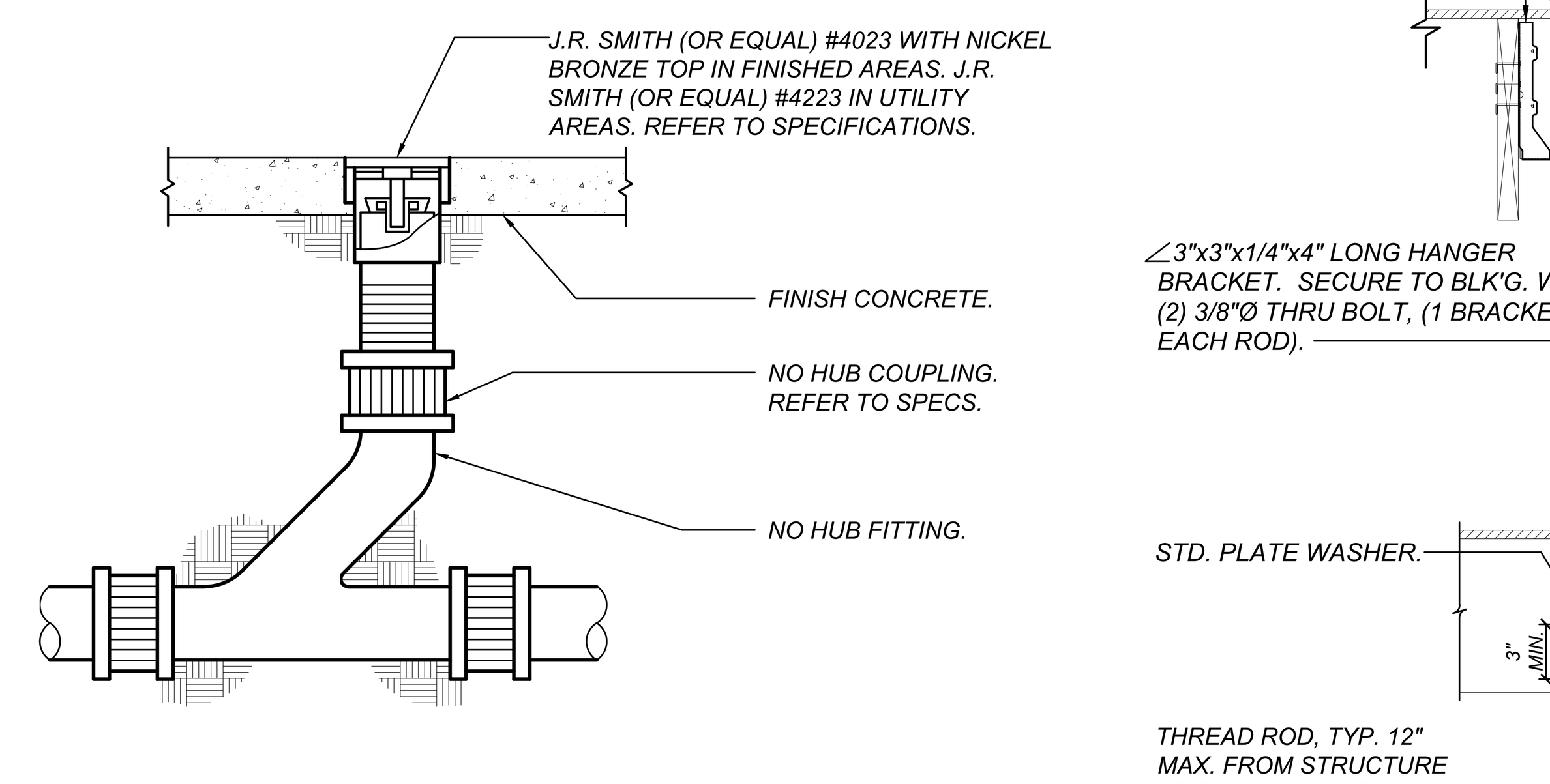

FLOOR CLEANOUT (FCO) DETAIL

G PX1.3

SCALE: NONE

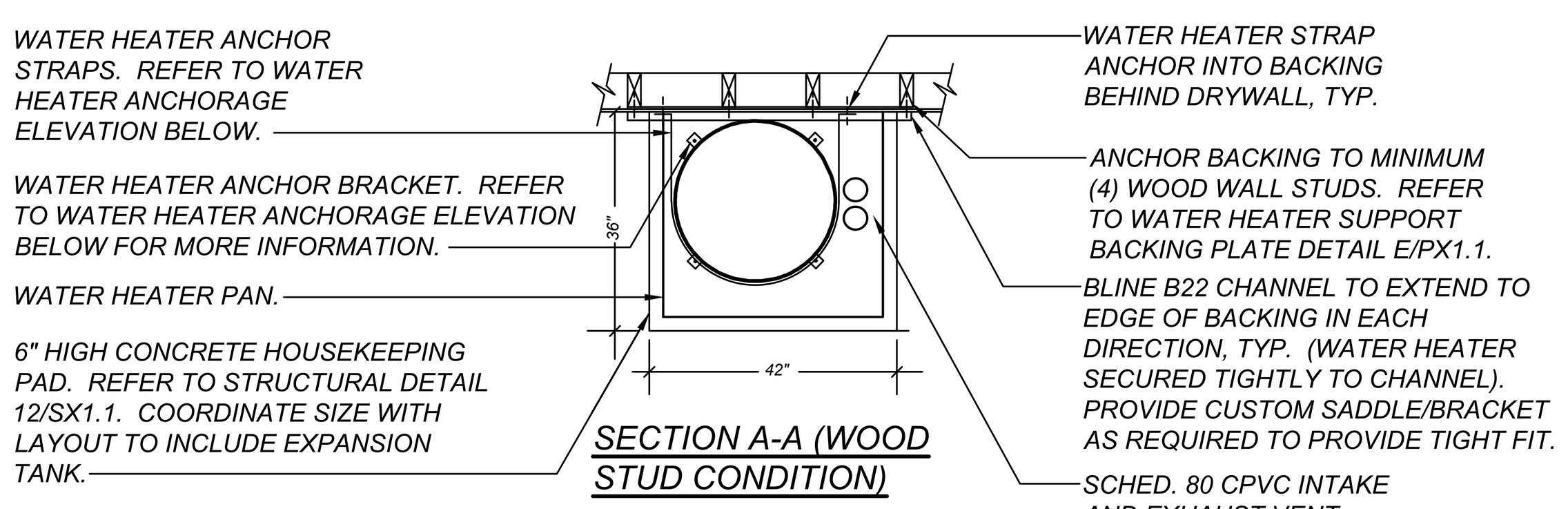

SECTION A-A (WOOD STUD CONDITION)

SCALE: NONE

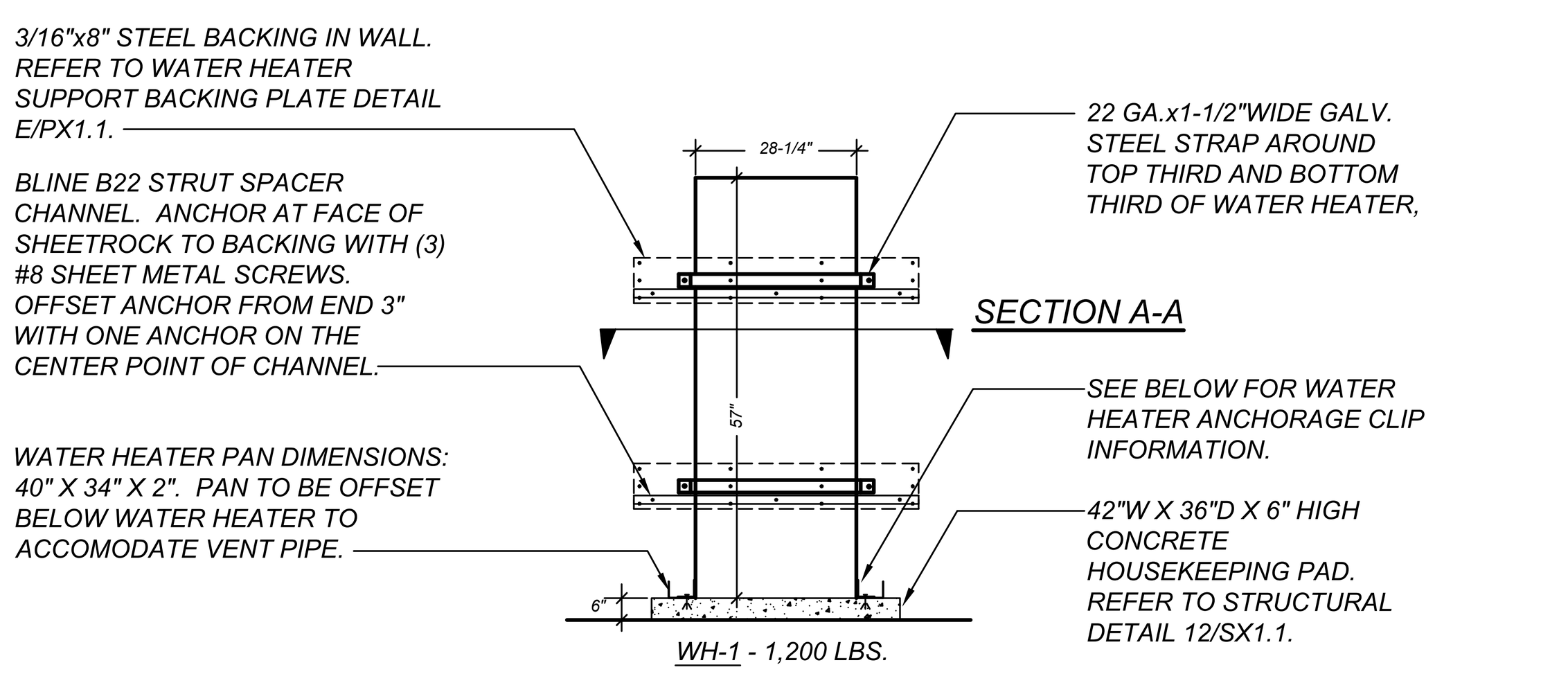

WATER HEATER ANCHORAGE ELEV.

SCALE: NONE

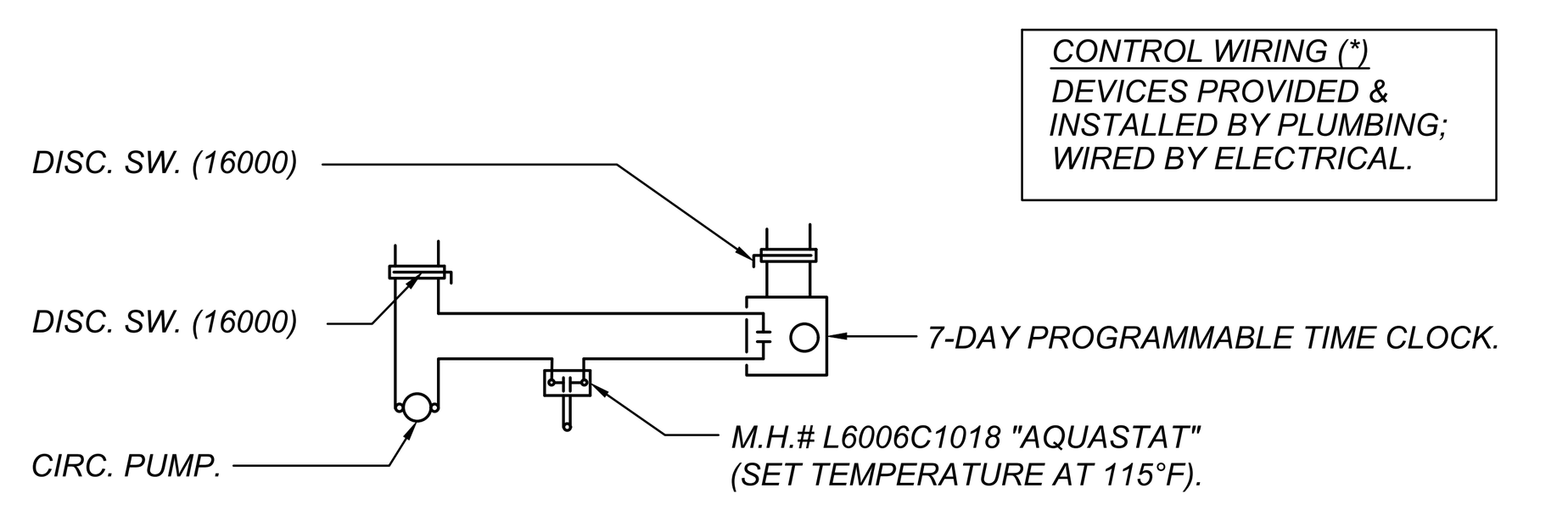

CONTROL WIRING DIAGRAM

SCALE: NONE

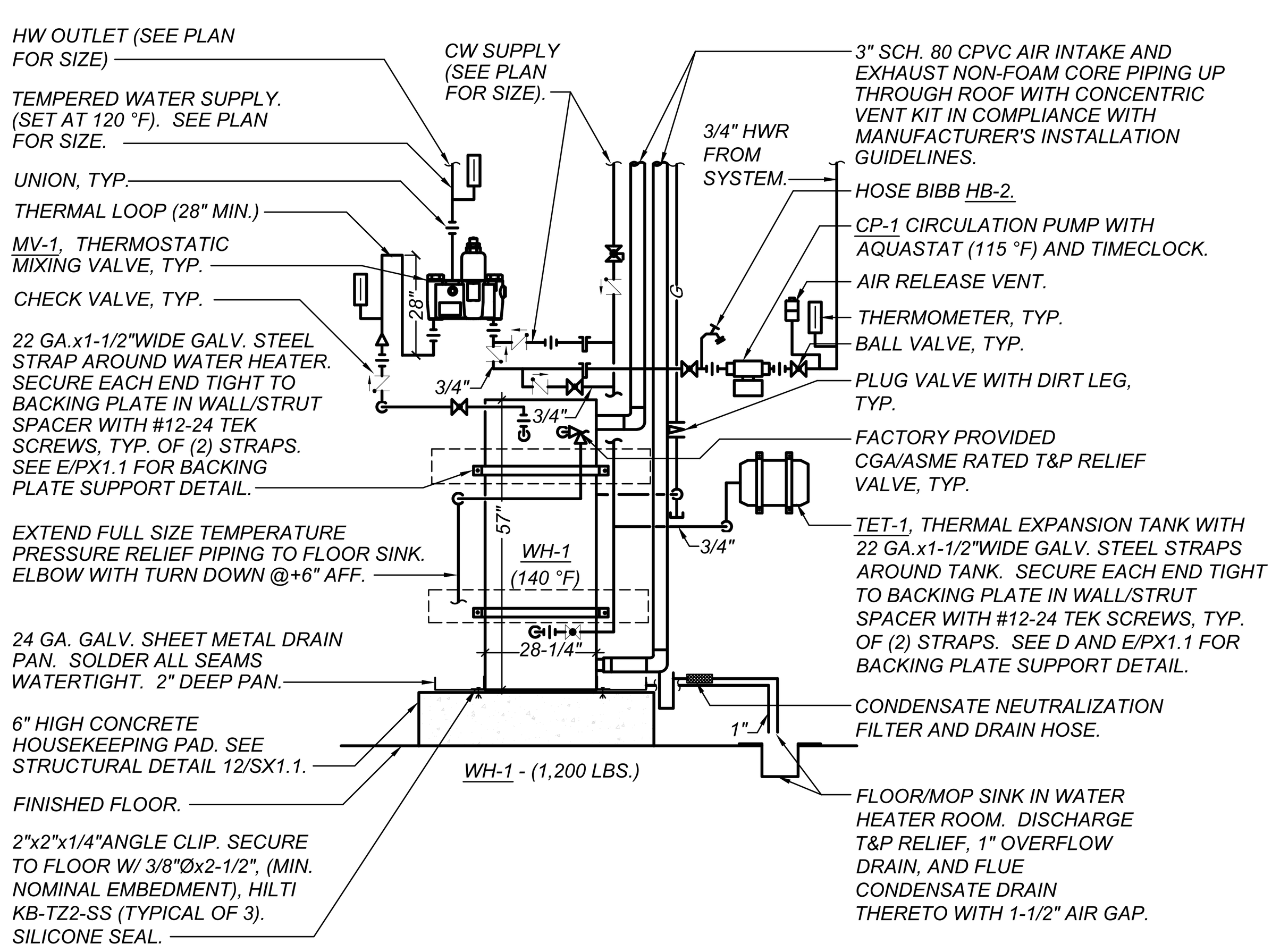

GAS WATER HEATER DETAIL WH-1 (ALT - 3)

H PX1.3

SCALE: NONE

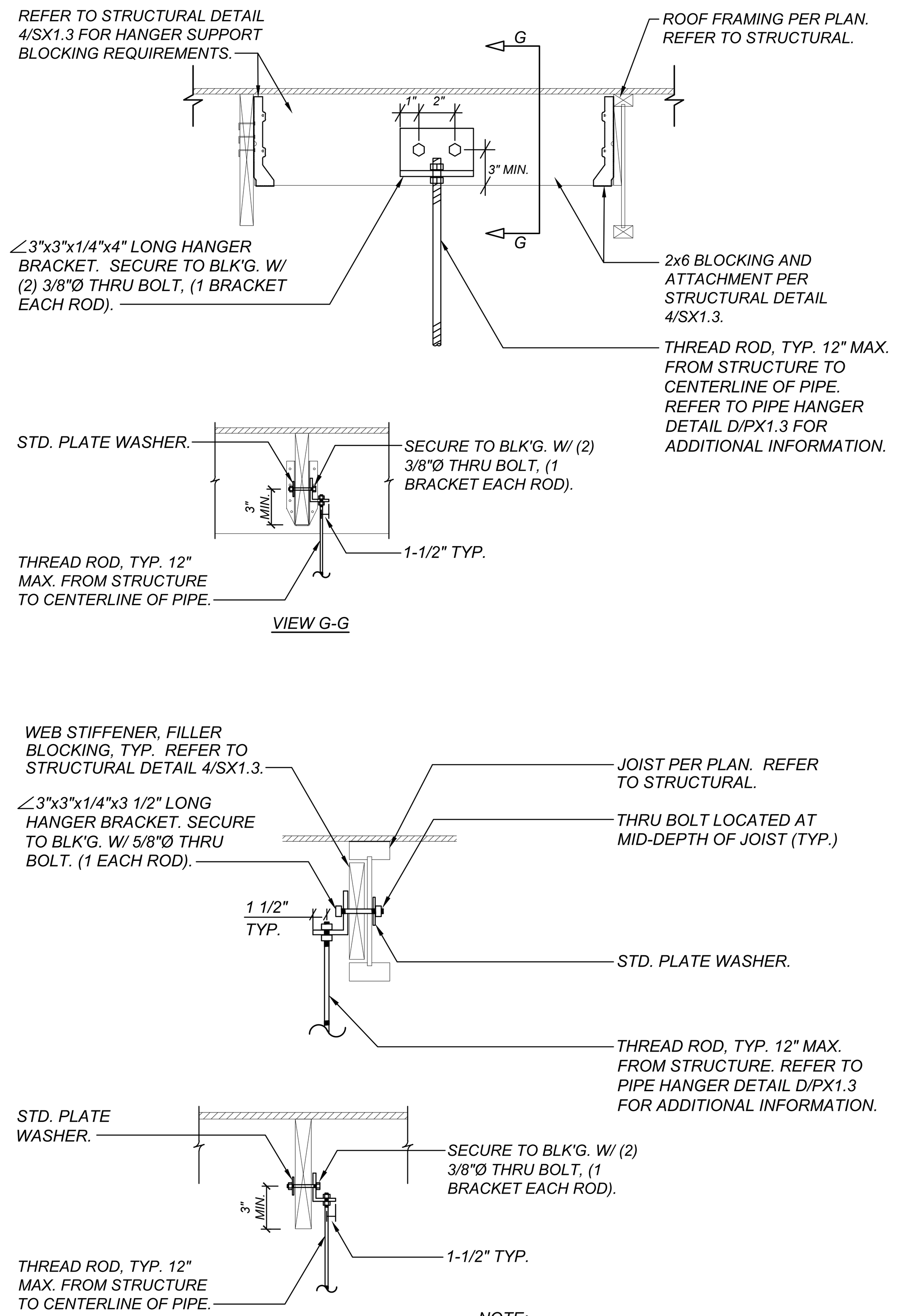

NOTE:
1. REFER TO PLUMBING SPECIFICATIONS AND 2025 CPC TABLE 313.3 AND 316.3 FOR ADDITIONAL REQUIREMENTS FOR SUPPORT HANGER SIZE AND SPACING.

UPPER HANGER ATTACHMENT DETAIL

E PX1.3

SCALE: NONE

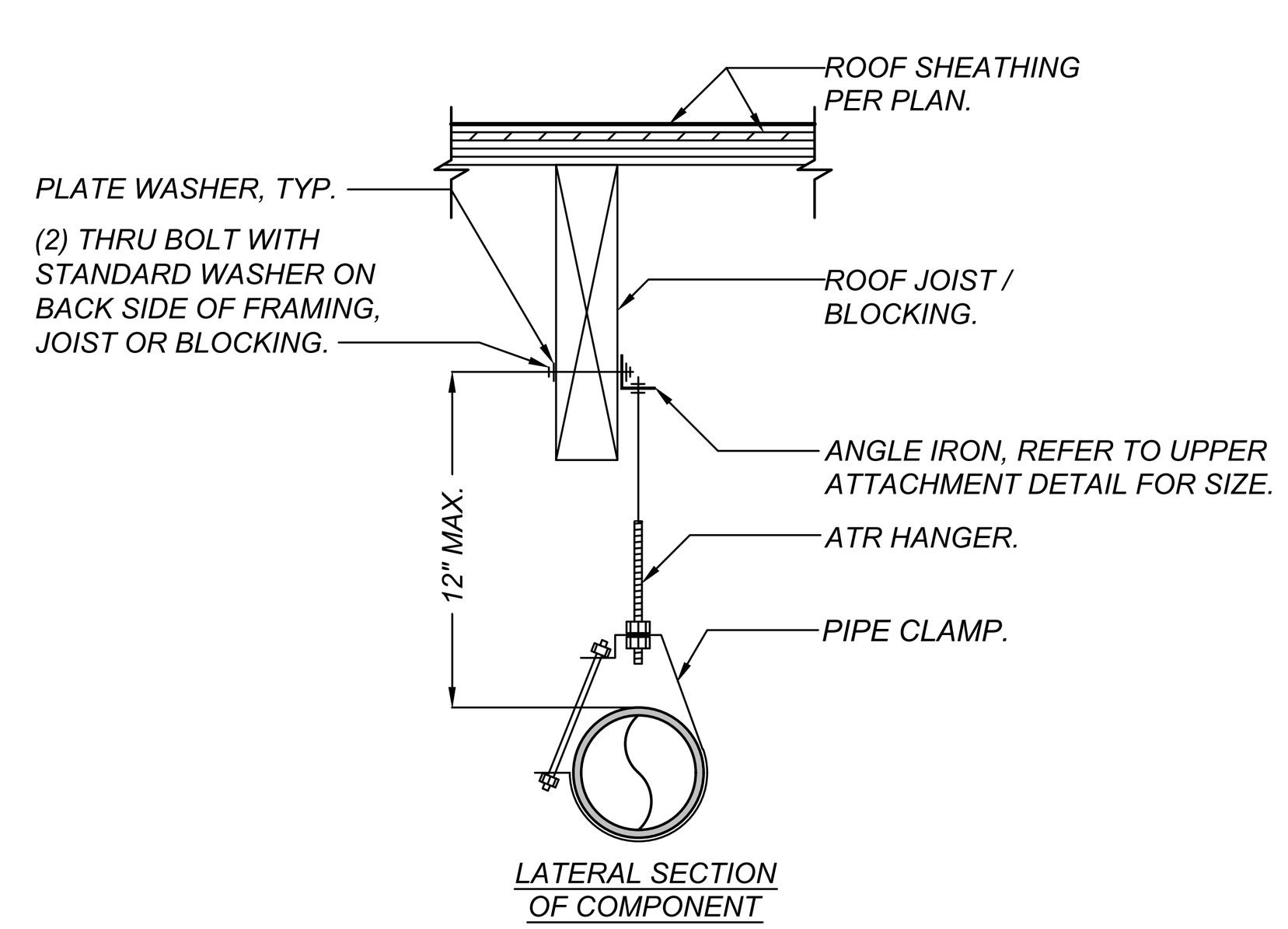

12" RULE DETAIL - SINGLE HUNG

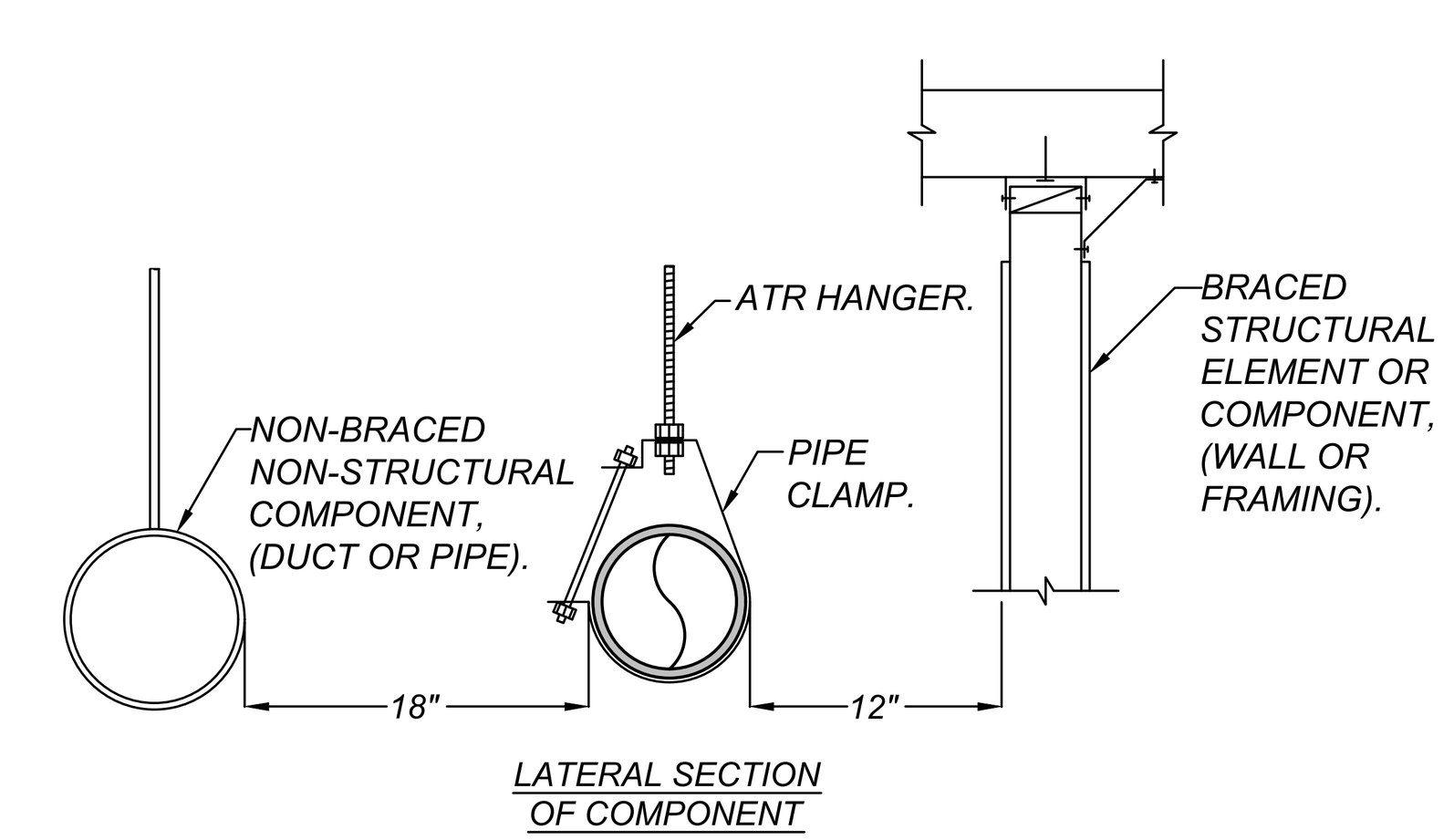

IMPACT PREVENTION DETAIL - SINGLE HUNG

SINGLE DISTRIBUTION SYSTEM COMPONENT:
PIPE OF DUCTILE MATERIALS (R_P > 4.5):
1. 3" MAXIMUM DIAMETER FOR NON-HAZARDOUS MATERIALS (I_P = 1.0).
2. 1" MAXIMUM DIAMETER FOR HAZARDOUS MATERIALS (I_P > 1.0).
3. PROVIDE FLEXIBLE CONNECTION AT RESTRAINT OR CONNECTION TO BRACED EQUIPMENT.

12" RULE AND IMPACT PREVENTION DETAIL

F PX1.3

SCALE: NONE

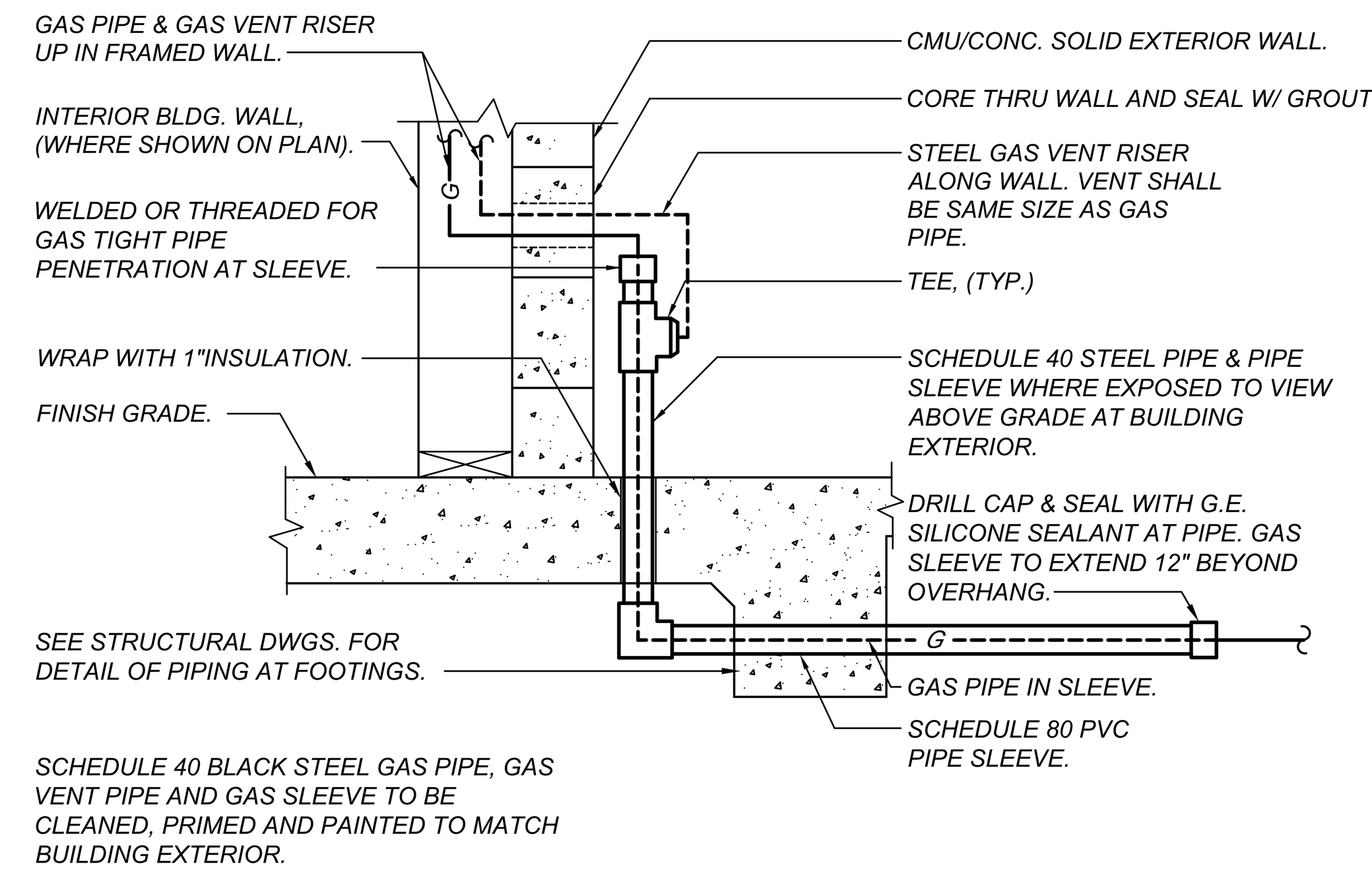

SCHEDULE 40 BLACK STEEL GAS PIPE, GAS VENT PIPE AND GAS SLEEVE TO BE CLEANED, PRIMED AND PAINTED TO MATCH BUILDING EXTERIOR.

GAS PIPE IN SLEEVE DETAIL

C PX1.3

SCALE: NONE

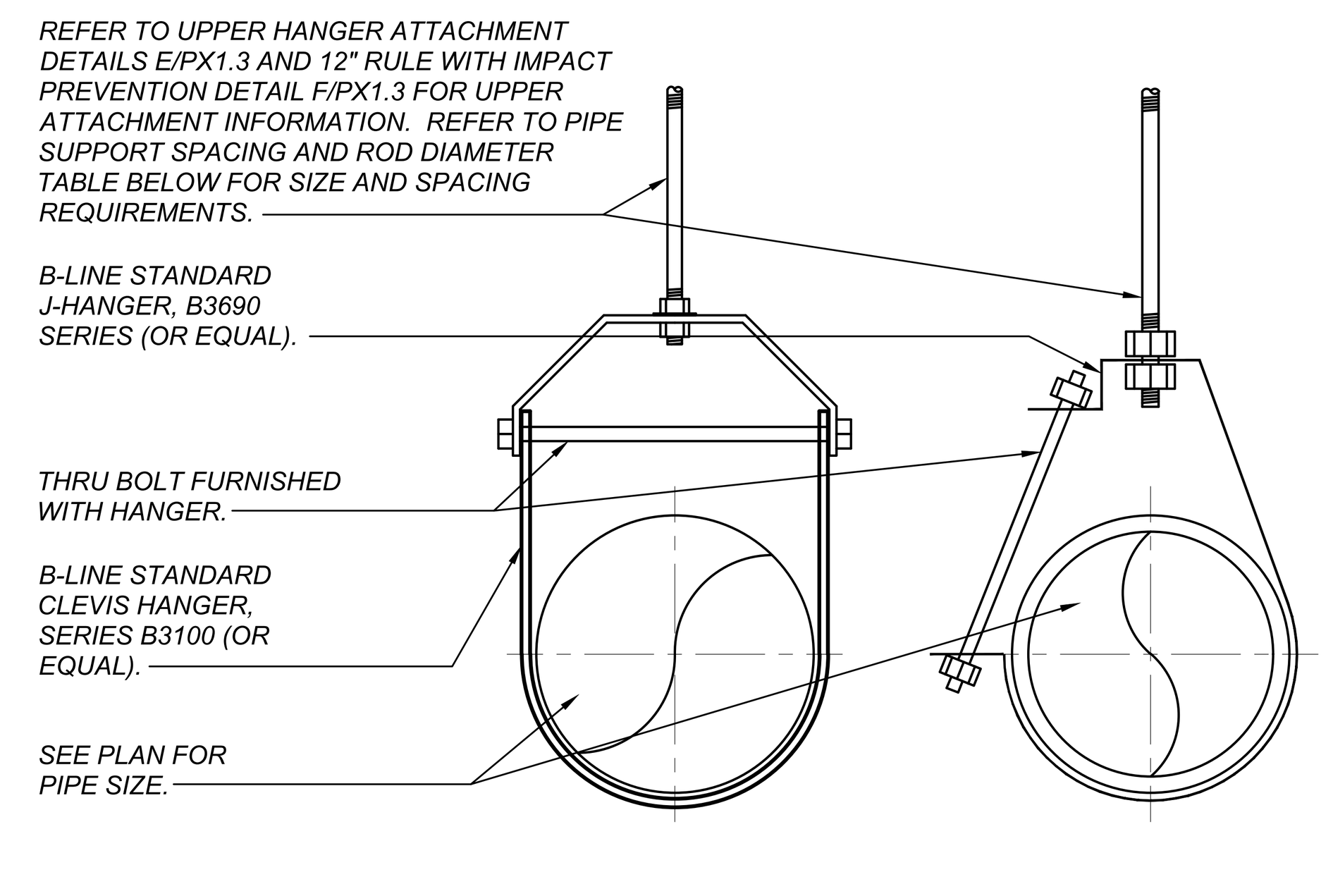

PIPE SUPPORT SPACING AND ROD DIAMETER

Pressure Pipe: Pipe Size (Inches)	Threaded Rod Size (Inches)	Copper (Feet)	Maximum Spacing* Between Supports (ft.) Sch. 40 steel
1/2"	3/8"	6	6
3/4"	3/8"	6	8
1"	3/8"	6	8
1-1/4"	3/8"	6	10
1-1/2"	3/8"	6	10
2"	3/8"	10	10
2-1/2"	1/2"	10	10
3"	1/2"	10	10

Notes:
*Based on straight lengths of pipe with couplings only. Provide additional supports for equipment, valves or other fittings. Seismic requirements may reduce maximum spacing.

Cast Iron Gravity Drain Pipe: Piping shall be supported at each length of pipe or fitting, but in no case at greater spacing than indicated above for pressure pipe.

General: Hangers shall be placed to support piping without strain on joints or fittings. Maximum spacing between supports shall be as specified above. Actual spacing requirements will depend on structural system. Vertical piping shall be supported with riser clamp at base and each floor. Cast Iron - Do not exceed 15 feet intervals, Copper - Do not exceed 10 feet intervals, Steel Pipe for water- Do not exceed 15 feet intervals, Steel pipe for gas - Do not exceed information in the above table. Support pipe within 12" of all changes in direction. Support individual pipes with pipe hanger.

Refer to Specification 22 00 00, Part 2.1, C.1 "Products - Piping Materials - Miscellaneous Piping Items - Pipe Support" and Section 22 00 00, Part 3.1, "Execution - Piping Installation."

Refer to 2025 CPC Table 313.3 and Table 313.6 for additional hanger and support information.

Refer to CBC 1617A.1.26 and DSA IR 16-13.
Section 3.4 - Piping and Distribution Systems (CBC Section 1617A.1.26)
To qualify for any of the exemptions listed below. the following is required:
1) Flexible connections, expansion loops, or other provisions are made to accommodate the relative displacement between the component and the piping.
Flexible connections may be omitted when piping is rigidly attached to the same floor or wall that provides vertical and lateral support for the equipment or fixture per CBC 1617A.1.26.
2)The piping system is positively attached to the structure.

Section 3.4.1 - Individually Supported Piping Distribution System Components

Section 3.4.1.1 (In addition to Section 3.4 above)
1) Rp ≥ 4.5 (excludes pipes of glass, cast iron, and non-ductile plastics).
2) Nominal pipe size does not exceed 3" when Ip=1.0, and does not exceed 1" when Ip>1.0.
3) Vertical pipe size is provided by 3/8" or 1/2" diameter rod hangers.
4) Rod hanger does not exceed 12" in length from the pipe support to the connection point on the support structure.
5) The total weight supported by any rod hanger is 50 lbs or less.

Section 3.4.1.2 (In addition to Section 3.4 above)
1) Vertical suppor is required by rod hangers.
2) Nominal pipe size does not exceed 3" for Ip=1.0, or exceed1" for Ip=1.5
3) Provisions are made to avoid impact with other components, as follows:

Section 3.5 - Provisions To Avoid Impact
1) Maintain minimum horizontal separation distance of 12" between unbraced component and braced element.
2) Maintain minimum separation distance of 18" between adjacent, unbraced components.
3) Smaller separations may be accepted for components with an Ip=1.0 where impact with adjacent components would not cause contents to be released that would negatively impact the occupants, the building integrity, or the function of the component like air vents and air ducts.

Additional Notes:
1. All pipe shall be in accordance with ASME B31 (2001, 2002, 2008, and 2018) material with Rp is greater than or equal to 4.5. Pipes of glass, cast iron, and non-ductile plastic shall not be used.
2. Rod hangers do not exceed 12" in length from the pipe support point to connection point on the support structure, and the total weight supported by any rod hanger is 50 lbs or less.
3. Alternately to #2, provisions are made to avoid impact with other structural and non structural components or to protect the piping in the event of such impact. See IR 16-13 Section 3.5.
4. At conduit turns additional support shall be added within 24" of the conduit turns measured from perpendicular conduit centerline.
5. Notify Design Professional of Record if above condition cannot be met. A CDD shall be submitted to DSA for bracing layout and detail.

PIPE HANGER DETAIL

D PX1.3

SCALE: NONE

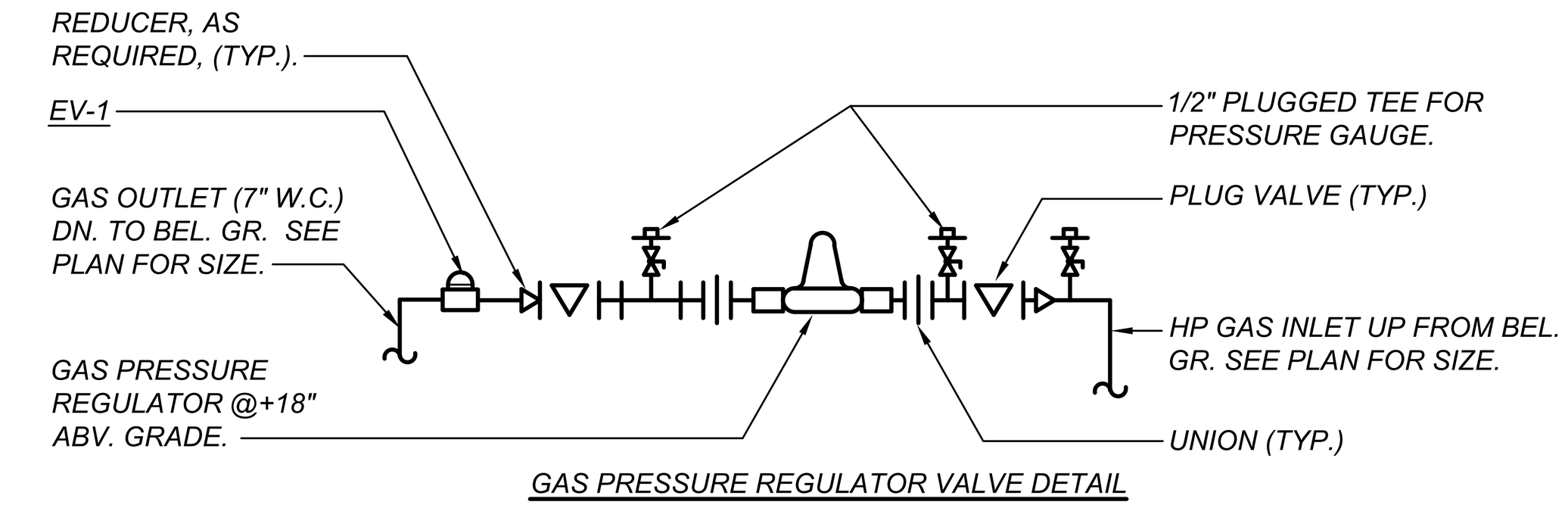

GAS PRESSURE REGULATOR VALVE DETAIL

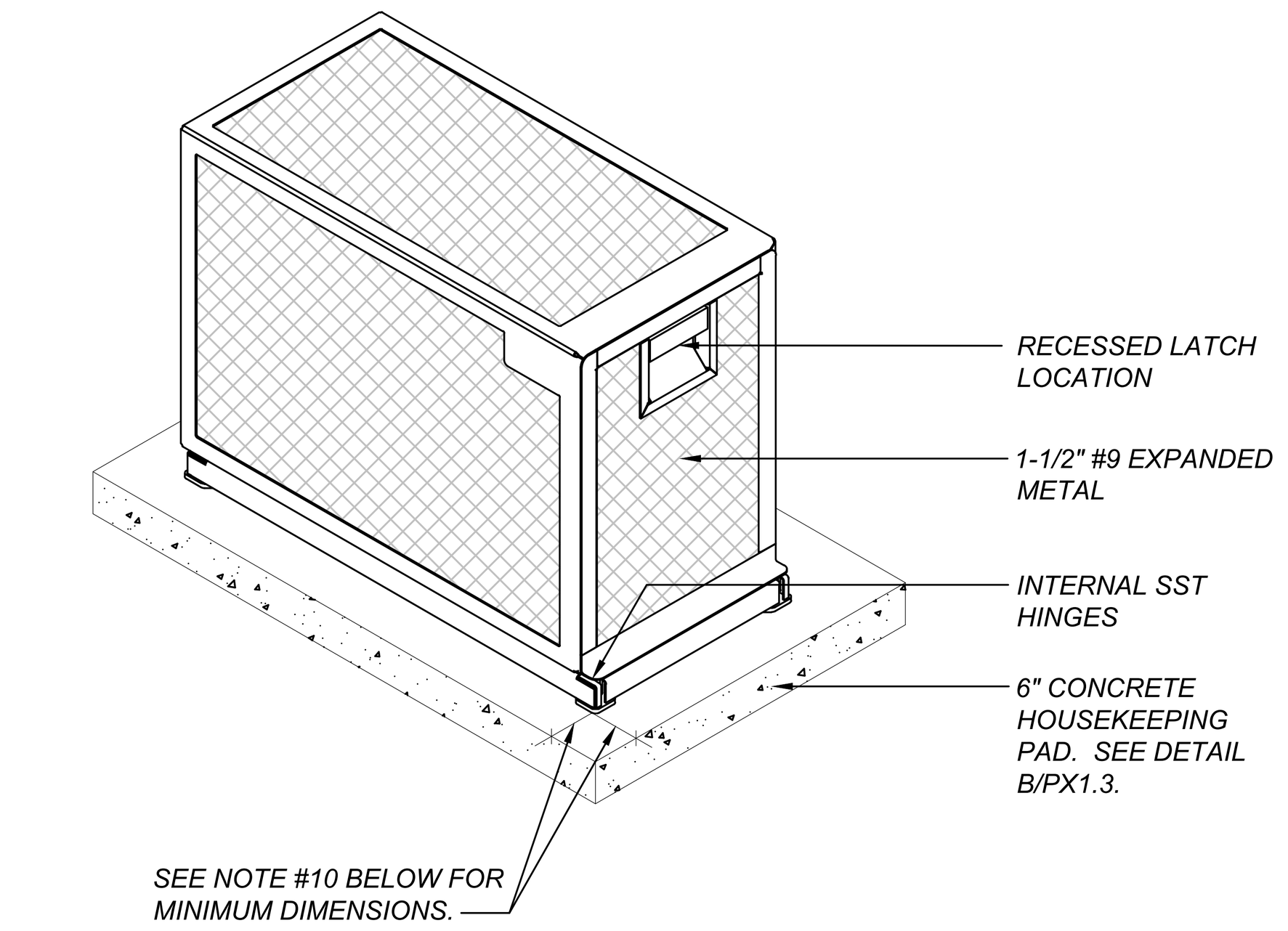

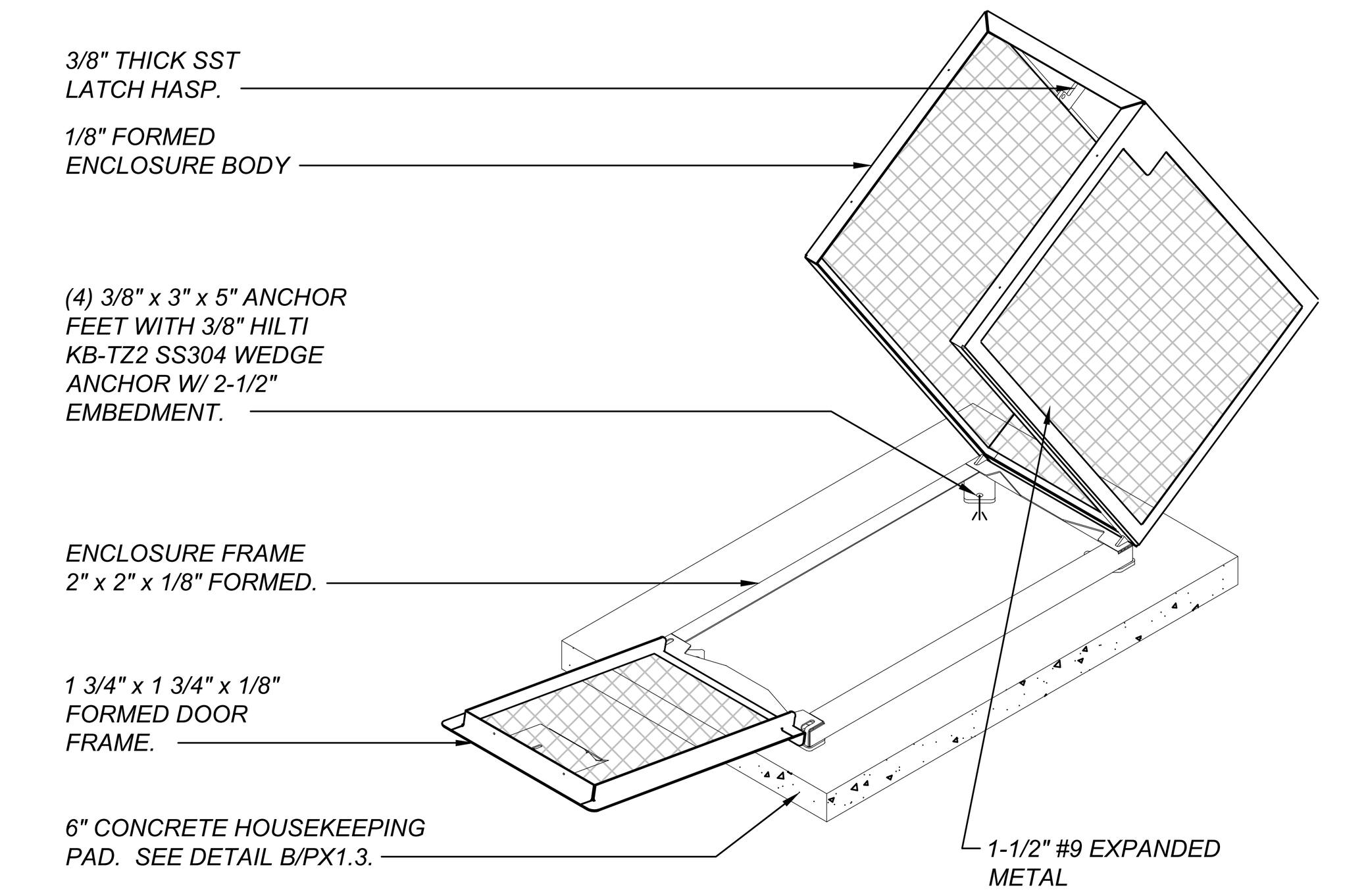

ALL MEASUREMENT STATED ARE OUTSIDE MEASUREMENT			
CAT. #	WIDTH	LENGTH	HEIGHT
PW/ E1A - (XS)	12"	24"	26"
PW/ E1A - (S)	14"	30"	24"
PW/ E1A - (M)	17"	40"	30"
PW/ E1A - (L)	20"	47"	36"

NOTES:
1. ENCLOSURE TYPE: E1A GAS REGULATING ENCLOSURE
2. BODY FRAME MATERIAL: 1/8" OR 10GA FORMED BODY
3. EXPANDED METAL SCREEN IS NO.9 W/ 1-1/2" WELDED EVERY 6"
4. DOOR TO HAVE SST INTERNAL HINGES.
5. (4) FOUNDATION ANCHOR PLATES 3"x5"x3/8" WITH 5/8" DIA HOLES.
6. ALL PARTS TO BE SAND BLASTED TO SSPC-5 W/ METAL BLAST, W/ A 3-4 MILS ANGULAR PROFILE
7. POWDER COATED HUNTER GREEN TO 2-3 MILS THICKNESS AFTER FABRICATION
8. ALL WELDING DONE PER AWS SPECIFICATIONS.
9. OPTIONAL RE-BAR EMBEDMENT FRAME.
10. THE HOUSEKEEPING PAD SHALL BE 4" LARGER THAN THE ENCLOSURE ON ALL SIDES FOR ANCHORAGE.
11. SIZE AS NECESSARY TO FIT REGULATOR AND PIPING.

GAS PRESSURE REGULATOR ENCLOSURE

A PX1.3

SCALE: NONE

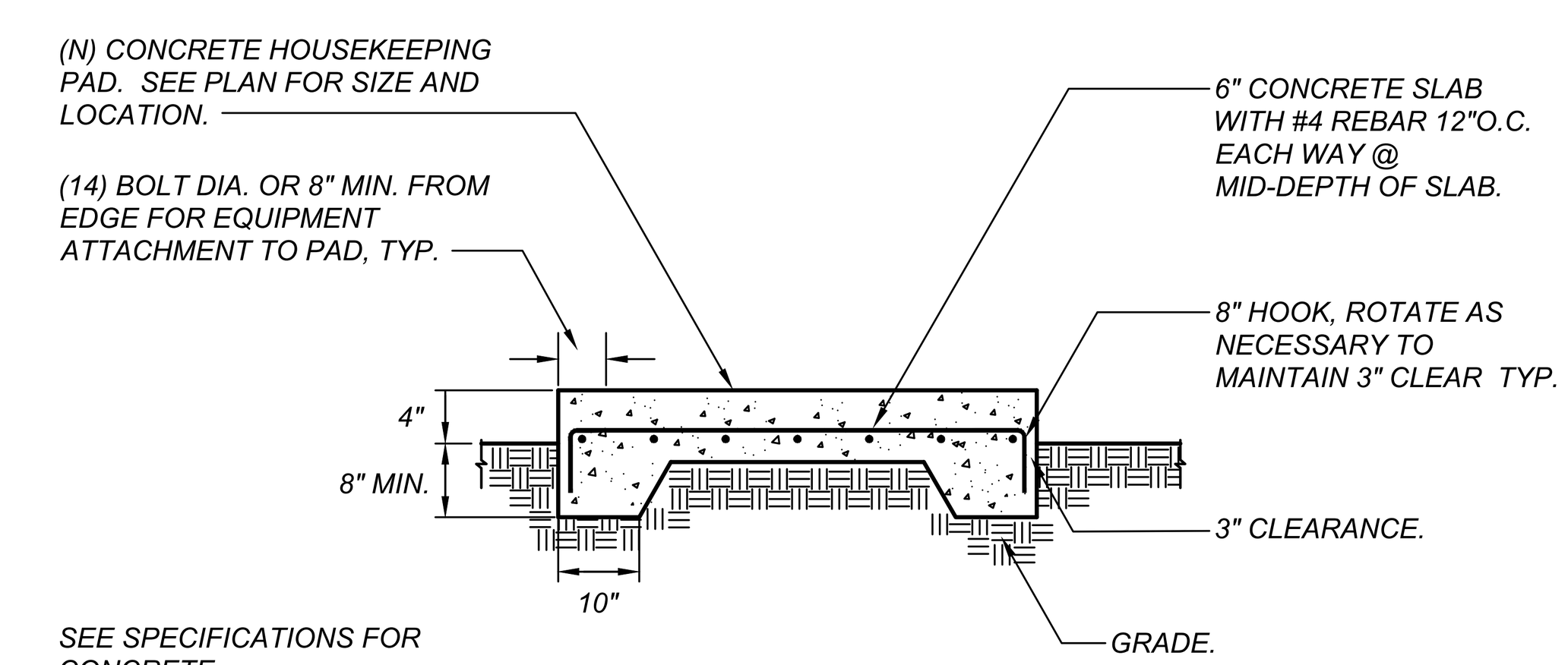

SEE SPECIFICATIONS FOR CONCRETE.

HOUSEKEEPING PAD DETAIL

B PX1.3

SCALE: NONE

Pxxx

REGISTERED PROFESSIONAL ENGINEER
RYAN W. CARLSON
No. M34846
Exp. 6-30-28
MECHANICAL
STATE OF CALIFORNIA

LAWRENCE ENGINEERING GROUP
4910 E. Clinton Way, Suite 101 (559) 431-0101 Fresno, CA 93727 FAX (559) 431-1362
25106

PBK
FRESNO, CA | 559-448-8400 | www.pbk.com

PARLIER HS STADIUM REPLACEMENT

603 3rd Street
Parlier, CA 93648

CLIENT PROJECT NO: 250093
DSA SUBMISSION
DSA APPL. NO. : 02-124002 DSA FILE NO. : 10-H12

PARLIER UNIFIED SCHOOL DISTRICT

CLIENT	
PARLIER UNIFIED SCHOOL DISTRICT	
DATE YYYY/MM/DD	PROJECT NUMBER 250093

DRAWING HISTORY

No.	Description	Date

CHECKED BY: Checker
DRAWN BY: Author

PLUMBING DETAILS

PX1.3

19 June 2026 8:48 AM P:\2025\25106 Parlier HS Stadium Replacement\4-Drawings\5 P\PX1.1-1.4 – PLUMBING DETAILS.dwg rose

0"
1"

3M

UL System No. W-L-1353
XHEZ - Throug Penetration Firestop Systems
XHEZ7 - Throug Penetration Firestop Systems Certified for Canada

October 22, 2020

ANSI/UL1479 (ASTM E814)	CAN/ULC S115
F Ratings - 1 and 2 Hr (See Item 1)	F Ratings - 1 and 2 Hr (See Item 1)
T Rating - 0 Hr	FT Rating - 0 Hr
	FH Ratings - 1 and 2 Hr (See Item 1)
	FTH Rating - 0 Hr

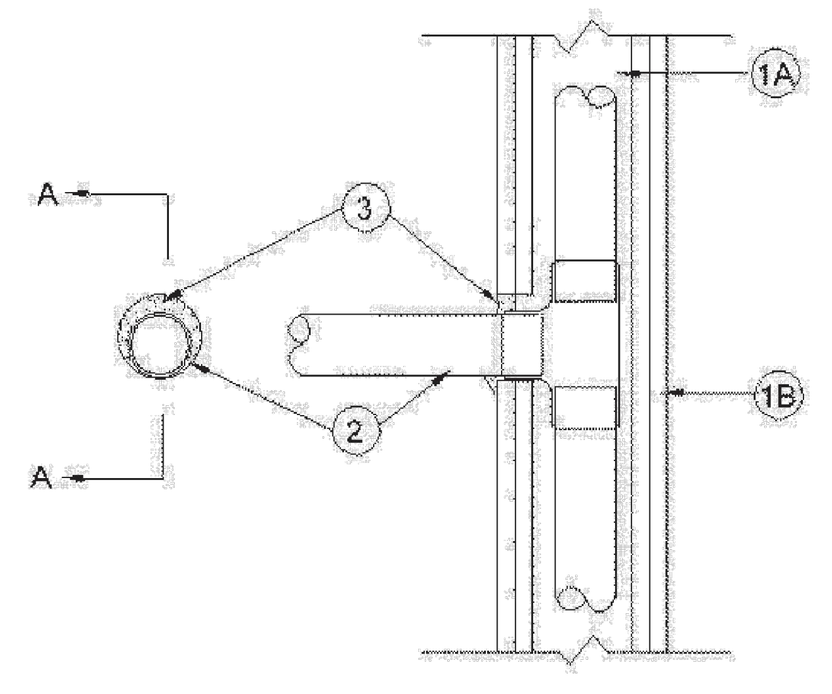

SECTION A-A

1. **Wall Assembly** — The 1 or 2 hr fire rated gypsum board/stud wall assembly shall be constructed of the materials and in the manner specified in the individual U300, U400, V400 or W400 Series Wall and Partition Designs in the UL Fire Resistance Directory and shall include the following construction features:

A. **Studs** — Wall framing may consist of either wood studs or steel channel studs. Wood studs to consist of nom 2 by 4 in. (51 by 102 mm) (or larger) lumber spaced 16 in. (406 mm) OC. Steel studs to be min 3-1/2 in. (89 mm) wide and spaced max 24 in. (610 mm) OC.

B. **Gypsum Board*** — Thickness, type, number of layers and fasteners as required in the individual Wall and Partition Design. Max diam of opening is 4-1/2 in.(114 mm).

The hourly F and FH Ratings of the firestop system are equal to the hourly fire rating of the wall assembly in which it is installed.

2. **Metallic Pipe** — Metallic pipe, tube or conduit installed within the stud cavity and connected to metallic tee or 90° elbow for use in closed (process or supply) or vented (drain, waste or vent) piping systems. Pipe, tube or conduit penetrating wall assembly on one side of wall to be installed either concentrically or eccentrically with the annular space between the penetrant and the periphery of opening of min 0 in. (0 mm, point contact) to max 1 in. (25 mm). The following types of metallic pipes, tubes, conduits and tees may be used:

A. **Steel Pipe** — Nom 3 in. (76 mm) diam (or smaller) Schedule 10 (or heavier) steel pipe.

B. **Iron Pipe** — Nom 3 in. (76 mm) diam (or smaller) cast or ductile iron pipe.

C. **Copper Tubing** — Nom 3 in. (76 mm) diam (or smaller) Type L (or heavier) copper tubing.

D. **Copper Pipe** — Nom 3 in. (76 mm) diam (or smaller) Regular (or heavier) copper pipe.

E. **Conduit** — Nom 3 in. (76 mm) diam (or smaller) rigid steel conduit or electrical metallic steel tubing (EMT).

2A. **Conduit Body*** — (Not Shown) - When a steel conduit or EMT is used, nom 3 in. (76 mm) size (or smaller) steel conduit body with steel fittings as an alternate to the metallic tee. Refer to Conduit Fittings (DWTT) category in the UL Electrical Construction Directory.

3. **Fill, Void or Cavity Material* — Caulk** — Min 5/8 in. (16 mm) thickness of fill material applied within the annulus, flush with surface of wall. At the point contact location between duct and wallboard, a min 1/2 in. (13 mm) diam bead of sealant shall be applied at the wallboard/duct interface on both surfaces of wall assembly.

3M COMPANY — IC 15WB+ caulk, CP 25WB+ caulk or FB-3000 WT Sealant

Through Penetrations | **Metallic Pipe** | 1000 Series | **Gypsum** | **WL**

***Indicates such products shall bear the UL or cUL Certification Mark for jurisdictions employing the UL or cUL Certification (such as Canada), respectively.**

Reprinted from the Online Certifications Directory with permission from UL©

UL CERTIFIED SAFETY US-CA R9700

3M Industrial Adhesive and Tapes
Fire Protection Products
3M Center, Building 230-G-149
St. Paul, MN 55144-1000

W-L-1353 • 1 of 1

3M Fire Protection Products
Applicator and Specifier Guide
http://3M.com/firestop 1-800-328-1687

FIRE STOP DETAIL

SCALE: NONE

C / PX1.4

System No. W-L-1001
June 15, 2005
F Ratings – 1, 2, 3 and 4 Hr (See Items 2 and 3)
T Ratings – 0, 1, 2, 3, and 4 Hr (See Item 3)
L Rating At Ambient – less than 1 CFM/sq ft
L Rating At 400 F – less than 1 CFM/sq ft

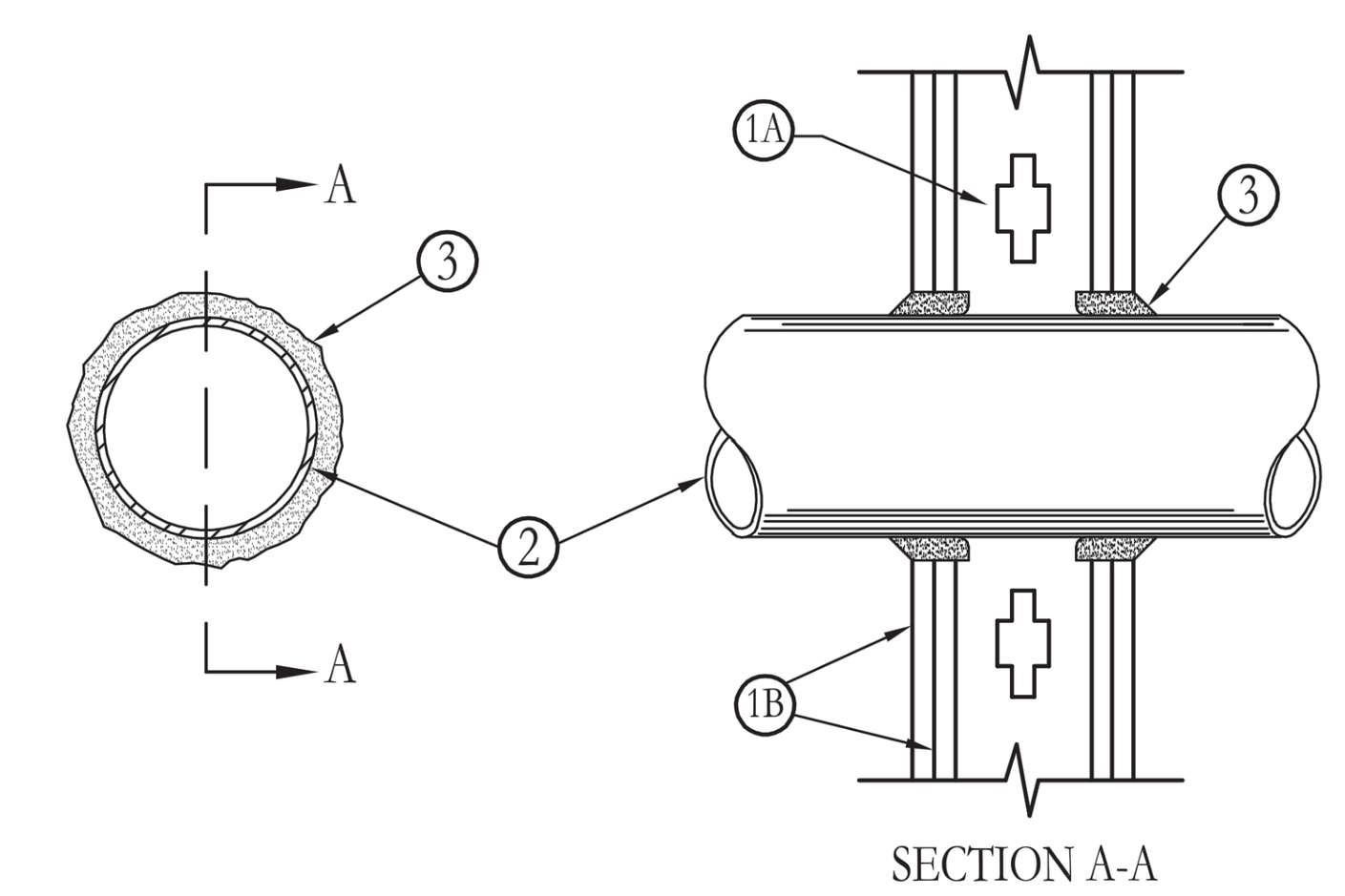

SECTION A-A

1. **Wall Assembly** – The 1, 2, 3 or 4 hr fire-rated gypsum wallboard/stud wall assembly shall be constructed of the materials and in the manner described in the individual U300 or U400 Series Wall or Partition Designs in the UL Fire Resistance Directory and shall include the following construction features:
   A. **Studs** – Wall framing may consist of either wood studs (max 2 hr fire rated assemblies) or steel channel studs. Wood studs to consist of nom 2 by 4 in. (51 by 102 mm) lumber spaced 16 in. (406 mm) OC with nom 2 by 4 in. (51 by 102 mm) lumber end plates and cross braces. Steel studs to be min 3-5/8 in. (92 mm) wide by 1-3/8 in. (35 mm) deep channels spaced max 24 in. (610 mm) OC.
   B. **Gypsum Board*** – Nom 1/2 or 5/8 in. (13 or 16 mm) thick, 4 ft. (122 cm) wide with square or tapered edges. The gypsum wallboard type, thickness, number of layers, fastener type and sheet orientation shall be as specified in the individual U300 or U400 Series Design in the UL Fire Resistance Directory. Max diam of opening is 26 in. (660 mm).
2. **Through Penetrant** – One metallic pipe, conduit or tubing installed either concentrically or eccentrically within the firestop system. The annular space between pipe, conduit or tubing and periphery of opening shall be min of 0 in. (0 mm) (point contact) to max 2 in. (51 mm). Pipe, conduit or tubing to be rigidly supported on both sides of wall assembly. The following types and sizes of metallic pipes, conduits or tubing may be used:
   A. **Steel Pipe** – Nom 24 in. (610 mm) diam (or smaller) Schedule 10 (or heavier) steel pipe.
   B. **Iron Pipe** – Nom 24 in. (610 mm) diam (or smaller) service weight (or heavier) cast iron soil pipe, nom 12 in. (305 mm) diam (or smaller) or Class 50 (or heavier) ductile iron pressure pipe.
   C. **Conduit** – Nom 6 in. (152 mm) diam (or smaller) steel conduit or nom 4 in. (102 mm) diam (or smaller) steel electrical metallic tubing
   D. **Copper Tubing** – Nom 6 in. (152 mm) diam (or smaller) Type L (or heavier) copper tubing
   E. **Copper Pipe** – Nom 6 in. (152 mm) diam (or smaller) Regular (or heavier) copper pipe.
   F. **Through Penetrating Product*** – **Flexible Metal Piping** – The following types of steel flexible metal gas piping may be used:
      1. Nom 2 in. (51 mm) diam (or smaller) steel flexible metal gas piping. Plastic covering on piping may or may not be removed on both sides of floor or wall assembly.
      OMEGA FLEX INC
      2. Nom 1 in. (25 mm) diam (or smaller) steel flexible metal gas piping. Plastic covering on piping may or may not be removed on both sides of floor or wall assembly.
      TITEFLEX CORP
      A BUNDY CO
      3. Nom 1 in. (25 mm) diam (or smaller) steel flexible metal gas piping. Plastic covering on piping may or may not be removed on both sides of floor or wall assembly.
      WARD MFG INC

Through Penetrations | **Metallic Pipes** | 1000 Series | Gypsum | **WL**

3M Fire Protection Products
www.3m.com/firestop
W-L-1001 • 1 of 2
Product Support Line
1-800-328-1687

System No. W-L-1001 *continued*

3. **Fill, Void or Cavity Material*** – **Caulk or Sealant** – Min 5/8. 1-1/4,1-7/8 and 2-1/2 in. (16, 32, 48 and 64 mm) thickness of caulk for 1, 2, 3 and 4 hr rated assemblies, respectively, applied within annulus, flush with both surfaces of wall. Min 1/4 in. (6 mm) diam bead of caulk applied to gypsum board/penetrant interface at point contact location on both sides of wall. The hourly F Rating of the firestop system is dependent upon the hourly fire rating of the wall assembly in which it is installed, as shown in the following table. The hourly T Rating of the firestop system is dependent upon the type or size of the pipe or conduit and the hourly fire rating of the wall assembly in which it is installed, as tabulated below:

Max Pipe or Conduit Diam In. (mm)	F Rating Hr	T Rating Hr
1 (25)	1 or 2	0+, 1 or 2
1 (25)	3 or 4	3 or 4
4 (102)	1 or 2	0
6 (152)	3 or 4	0
12 (305)	1 or 2	0

+When copper pipe is used, T Rating is 0 hr.

3M COMPANY – CP 25WB+ caulk or FB-3000 WT sealant,

*Bearing the UL Classification Marking

Reprinted from the Online Certifications Directory with permission from Underwriters Laboratories Inc.
Copyright © 2010 Underwriters Laboratories Inc.®

Through Penetrations | **Metallic Pipes** | 1000 Series | Gypsum | **WL**

3M Fire Protection Products
www.3m.com/firestop
W-L-1001 • 2 of 2
Product Support Line
1-800-328-1687

FIRE STOP DETAIL

SCALE: NONE

B / PX1.4

ELKAY® SPECIFICATIONS

ezH2O® Vandal-Resistant Bottle Filling Station & Bi-Level Cooler
Filtered Refrigerated Stainless
Model LVRCTL8WSK

IMPORTANT!
INSTALLER PLEASE NOTE :
This water cooler has been designed and built to provide water to the user which has not been altered by materials in the cooler waterways. The grounding of electrical equipment such as telephone, computer, etc. to water lines is a common procedure. The grounding may be in the building but may also occur away from the building. This grounding can cause electrical feedback into a water cooler creating an electrolysis which creates a metallic taste or causes an increase in the metal content of the water. This condition is avoidable by installing the cooler using the proper materials as shown below.

NOTICE
This water cooler must be connected to the water supply using a dielectric coupling. The cooler is furnished with a non-metallic strainer which meets this requirement. The drain trap which is provided by the installer should also be plastic to completely isolate the cooler from the building plumbing system.
Bottle filler unit on bracket attached to wall by 6 holes (as shown). Water and electrical will connect through pre-punched hole in basin.

OPERATION OF QUICK CONNECT FITTINGS

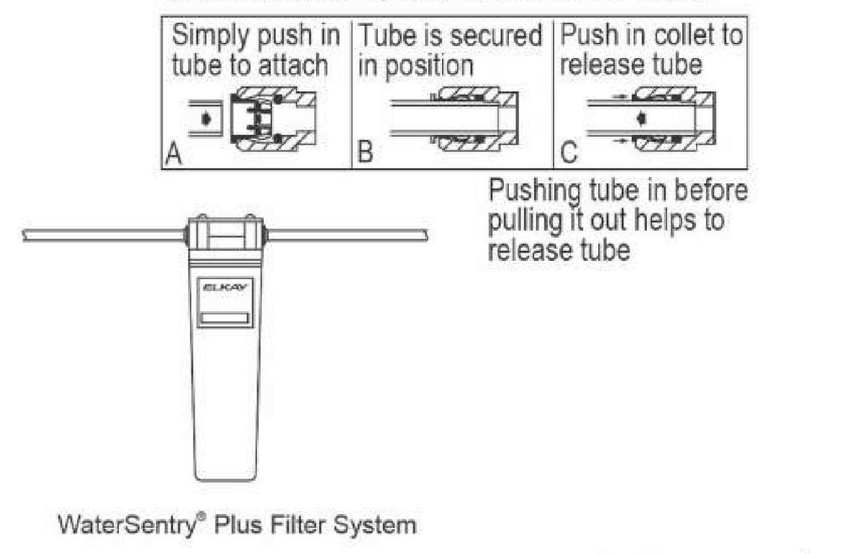

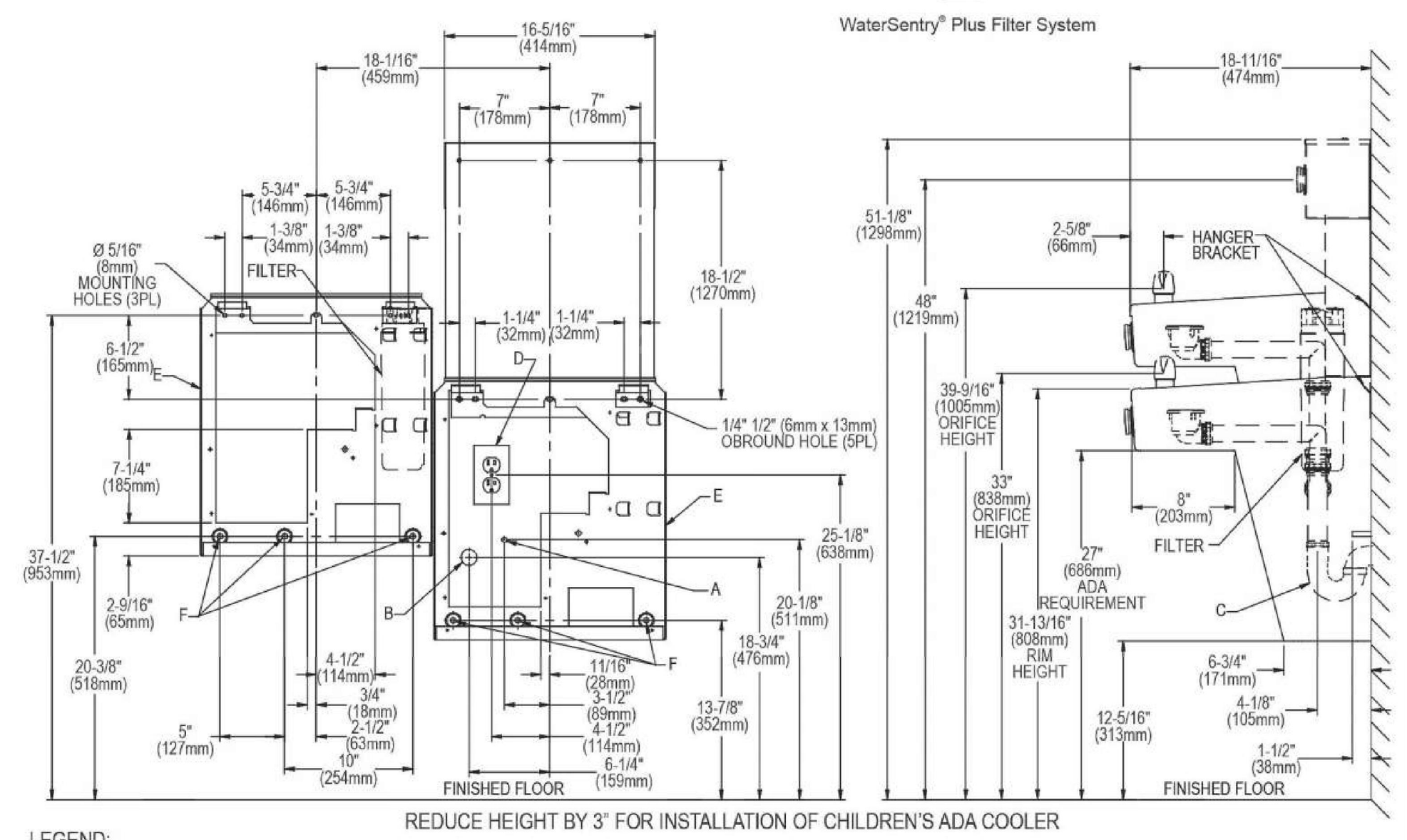

REDUCE HEIGHT BY 3" FOR INSTALLATION OF CHILDREN'S ADA COOLER

LEGEND:
A = Recommended Water Supply location. Shut-off Valve (not furnished) to accept 3/8" O.D. unplated copper tube. Up to 3" (76mm) maximum out from wall.
B = Recommended Waste Outlet location. To accommodate 1-1/2" nominal drain. Drain stub 2" (51mm) out from wall.
C = 1-1/2" Trap (not furnished).
D = Electrical Supply (3) Wire Recessed Box Duplex Outlet.
E = Insure proper ventilation by maintaining 6" (152mm) minimum clearance from cabinet louvers to wall.
F = 7/16" (11mm) Bolt Holes for fastening to wall.
Note : New Installations Must Use Ground Fault Circuit Interrupter (GFCI).

In keeping with our policy of continuing product improvement, Elkay reserves the right to change product specifications without notice. Please visit elkay.com for the most current version of Elkay product specification sheets. This specification describes an Elkay product with design, quality, and functional benefits to the user. When making a comparison of other producers' offerings, be certain these features are not overlooked.

Elkay REV 11152025 | 1-800-260-6640 | SVtechservice@Elkay.com | © 2025 Page 3
LVRCTL8WSK | Patent zurn-elkay.com/patents | LVRCTL8WSK_spec.pdf

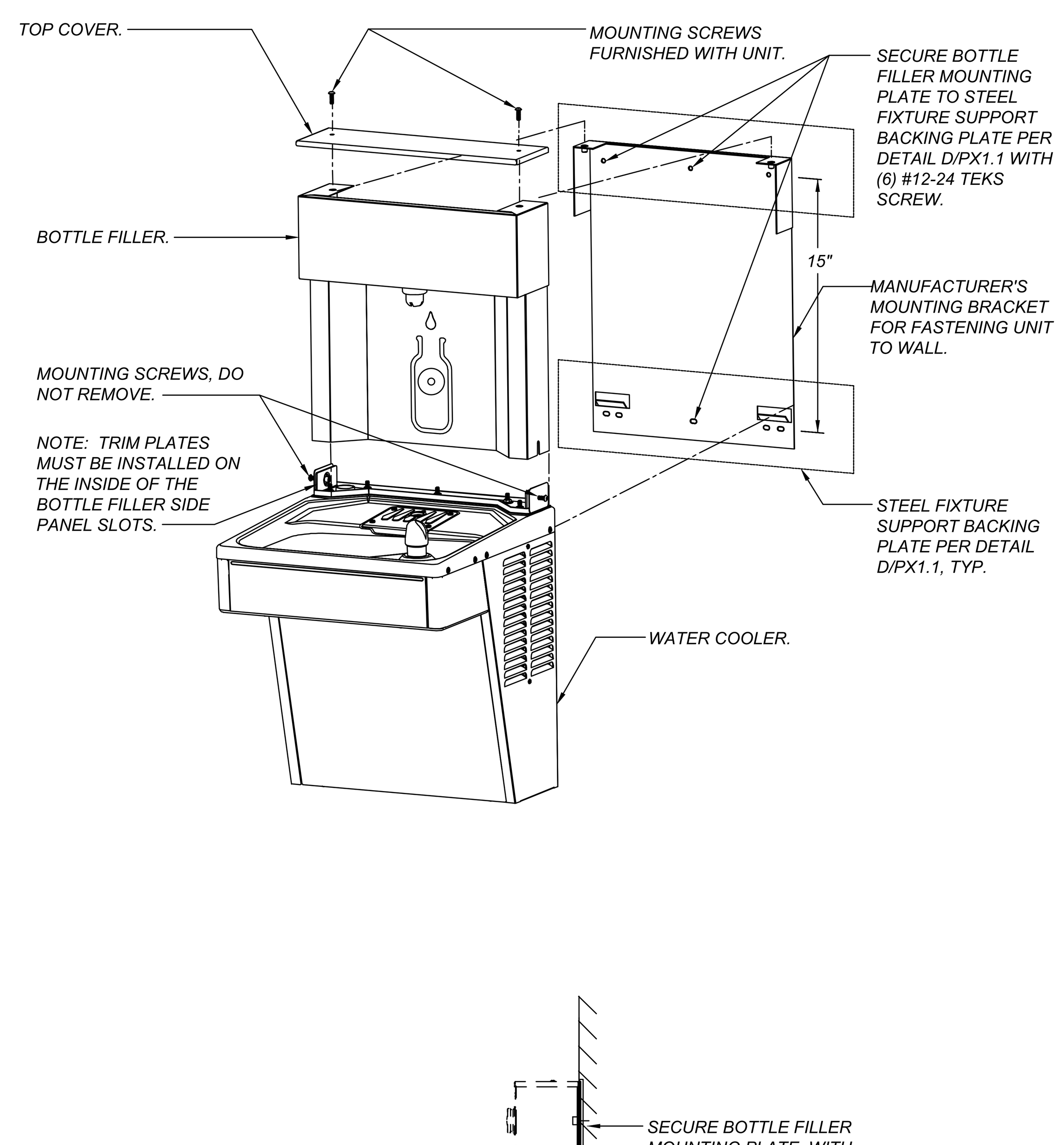

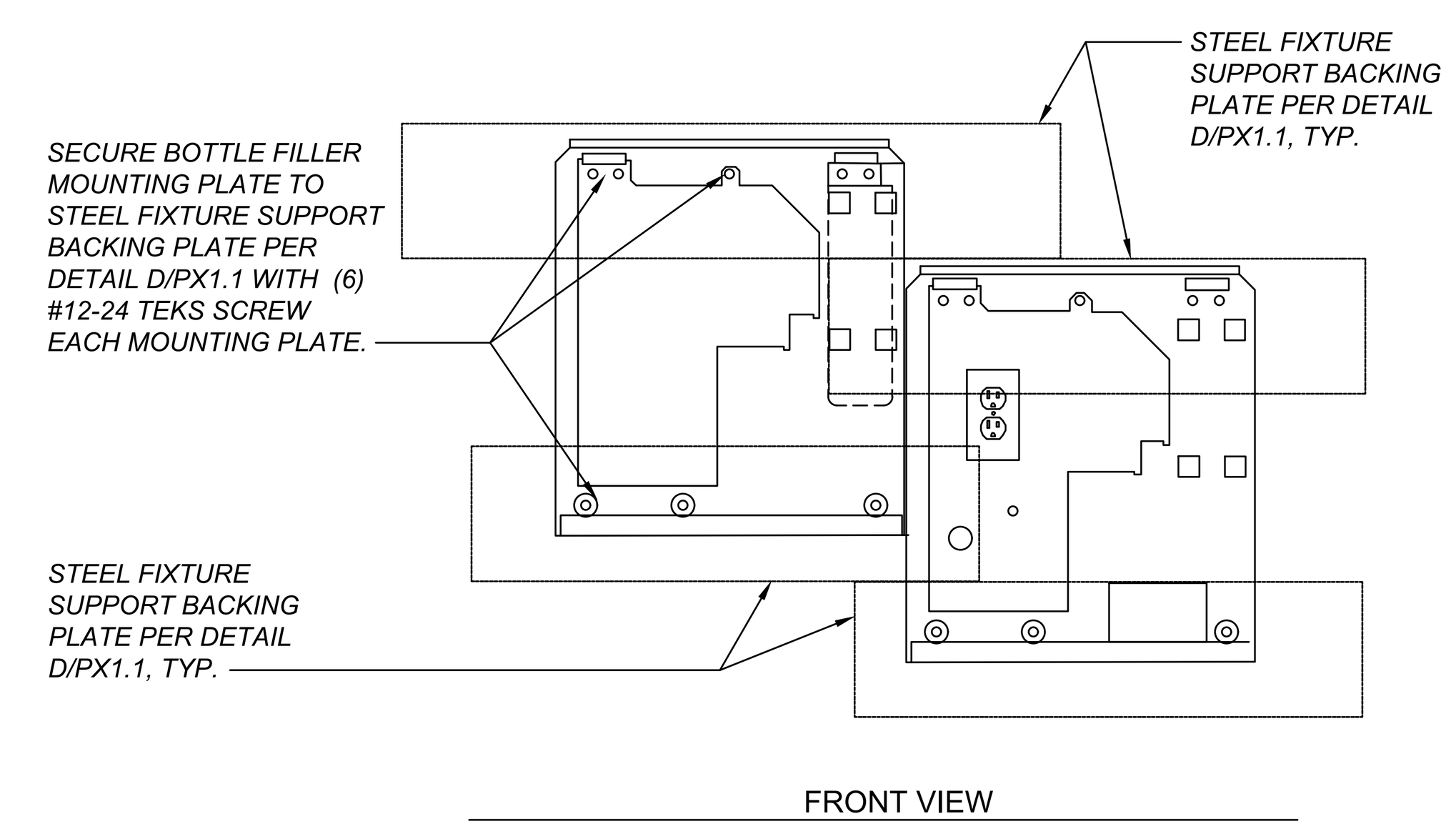

FRONT VIEW

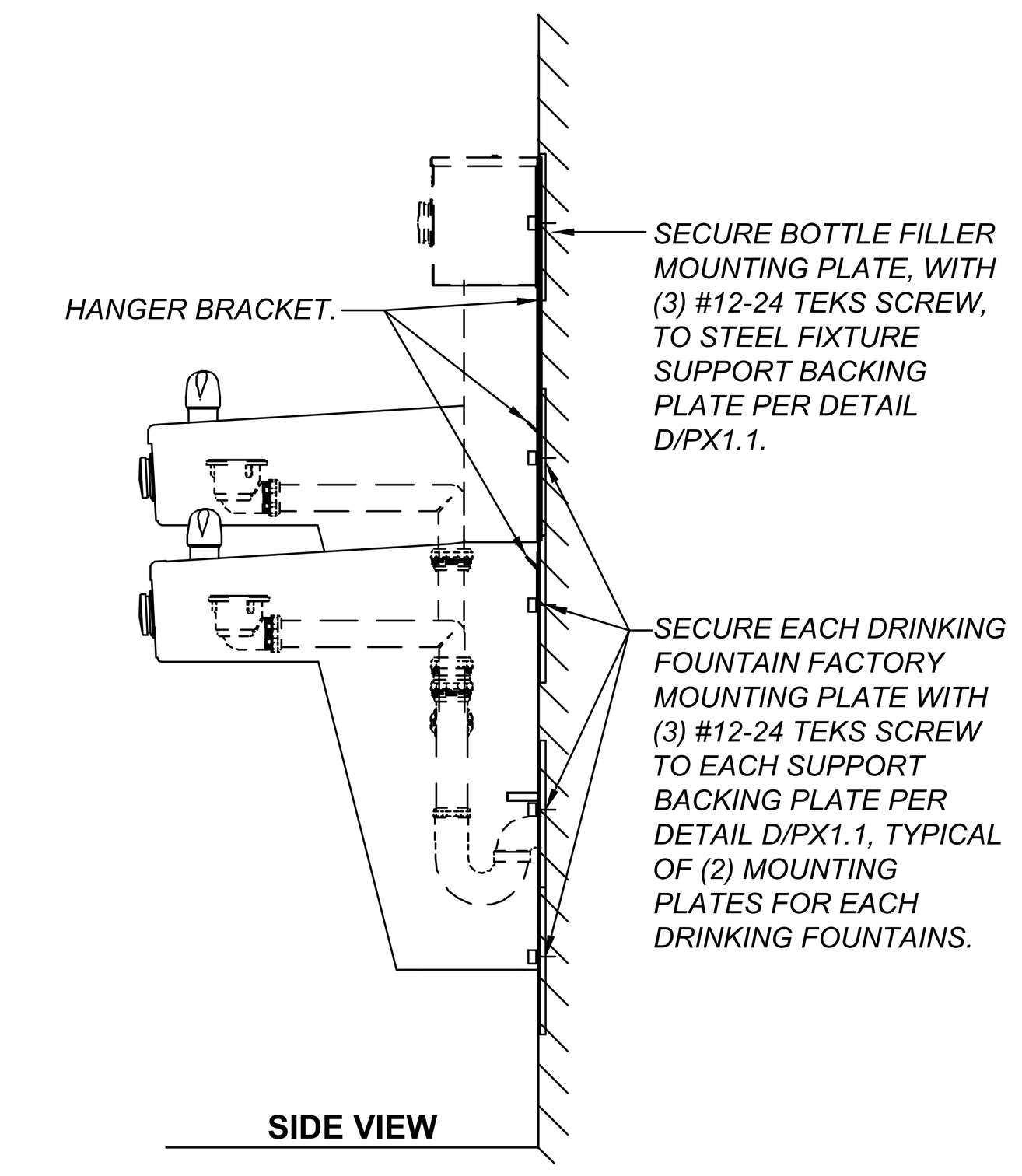

SIDE VIEW

ANCHORAGE DETAILS

NOTE: STANDARD TWO-LEVEL REVERSE CONFIGURATION SIMILAR. INSTALL IN COMPLIANCE WITH THE MANUFACTURER'S MOST CURRENT INSTALLATION GUIDELINES. ELKAT RESERVES THE RIGHT TO CHANGE PRODUCT SPECIFICATIONS WITHOUT NOTICE.

DRINKING FOUNTIAN MOUNTING DETAIL

SCALE: NONE

A / PX1.4

PBK
www.pbk.com
559-448-8400
FRESNO, CA

PARLIER HS STADIUM REPLACEMENT
603 3rd Street
Parlier, CA 93648

CLIENT PROJECT NO: 250093
DSA SUBMISSION
DSA APPL. NO. : 02-124002 DSA FILE NO. : 10-H12

PARLIER UNIFIED SCHOOL DISTRICT

CLIENT	
PARLIER UNIFIED SCHOOL DISTRICT	
DATE: YYYY/MM/DD	PROJECT NUMBER: 250093

DRAWING HISTORY

No.	Description	Date

CHECKED BY: Checker
DRAWN BY: Author

REGISTERED PROFESSIONAL ENGINEER RYAN W. CARLSON No. M34846 Exp. 6-30-28 MECHANICAL STATE OF CALIFORNIA

LAWRENCE ENGINEERING GROUP
4910 E. Clinton Way, Suite 101 (559) 431-0101 25106 Fresno, CA 93727 FAX (559) 431-1362

PLUMBING DETAILS

PX1.4

0"
1"

PLUMBING FIXTURE AND EQUIPMENT SCHEDULE

MARK	FIXTURE	CONNECTION SIZES S or W	V	CW	HW	DESCRIPTION
WH-1	GAS WATER HEATER	-	-	1-1/2"	1-1/2"	BRADFORD WHITE #EF-100T-199E-3N(A), ASME RATED TANK, GAS FIRED ULTRA LOW NOx STORAGE WATER HEATER, 97% THERMAL EFFICIENCY, 100 GALLON STORAGE CAPACITY, 274 GPH RECOVERY RATE AT 85°F TEMPERATURE RISE, 145°F SUPPLY TEMPERATURE, 199,999 BTUH INPUT, POWERED DIRECT VENT. PROVIDE 4" CPVC AIR INTAKE AND FLUE EXHAUST THRU ROOF WITH #197009 (CPVC) IPWEX 4" CONCENTRIC VENT KIT, #A2123601 CONDENSATE NEUTRALIZING KIT (OR EQUAL), SIZED FOR EQUIPMENT CAPACITY. ELECTRICAL: POWER BURNER ASSEMBLY WITH 1/3 HP, 120V, 2 AMP MOTOR. SIZE: 28.25"Ø x 78" HIGH OPERATING WEIGHT = 1,600 LBS.
TET-1	EXPANSION TANK	-	-	1"	-	WESSELS TXA-130, 35 GALLON, 20" DIAMETER x 37" TALL, ASME CODE, LESS BLADDER MONITOR, 1" CONNECTION, 150 PSI WORKING PRESSURE, CHARGING VALVE.
TMV-1	THERMOSTATIC MIXING VALVE	-	-	3/4"	3/4"	BRADLEY "NAVIGATOR" HL45 MODEL #S59-3045-R-H-B-P ROUGH BRASS FINISH, HI/LO THERMOSTATIC MIXING VALVE, HIGH RANGE THERMOSTAT, WALL MOUNTING BRACKET, PIPED ASSEMBLY WITH INLET AND OUTLET SHUT OFF VALVES, (1.5) GPM MINIMUM FLOW CAPACITY, (25) GPM FLOW AT (20) PSIG PRESSURE DROP. SET OUTLET TEMPERATURE TO 125°F.
GPR-1	GAS PRESSURE REGULATOR	-	-	-	-	NORGAS / NMT - NGR02 (OR EQUAL) CSA 6.22/ANSI Z21.80 LISTED GAS PRESSURE REGULATOR W/ OVERPRESSURE PROTECTION DEVICE, 1" NPT INLET AND OUTLET SIZE, 649 CFH CAPACITY AT 5 PSIG INLET PRESSURE, WITH 7" W.C. OUTLET PRESSURE. 1/4" ORIFICE (F02B) 6.5" W.C. - 16" W.C. GREEN SPRING, (S02A).
EV-1	EARTHQUAKE VALVE	-	-	-	-	PACIFIC SEISMIC PRODUCTS "CALIFORNIA SEISMIC VALVE" #313(60)NPT, 1-1/2" THREADED VALVE, HORIZONTAL FLOW INSTALLATION, 60 PSI MAX. PRESSURE RATING, DRY FUEL GAS, LEVEL INDICATOR, U.L. LISTED, CA-DSA CERTIFIED.
EDF-1	ELECTRIC DRINKING FOUNTAIN	2"	2"	1/2"	-	ELKAY "ezH2O" MODEL #LVRCTL8WSK VANDAL RESISTANT BOTTLE FILLING STATION AND BI- LEVEL WATER COOLER, (LEFT SIDE HIGH AND RIGHT SIDE LOW W/ BOTTLE FILLER). CBC ACCESS COMPLIANT, WALL-MOUNT, FILTERED, REFRIGERATED, 8.0 GPH CHILLER CAPACITY, STAINLESS STEEL FINISH, ELECTRONIC BOTTLE FILLER BUTTON, MECHANICAL FRONT BUBBLER BUTTON ACTIVATION, GREEN TICKER, LAMINAR FLOW, VANDAL RESISTANT BUBBLER, AND REAL DRAIN. WALL MOUNTED FOR INDOOR AND OUTDOOR APPLICATIONS. DRINKING FOUNTAIN ANCHORAGE PER DETAIL A/PX1.4. INSTALL IN COMPLIANCE WITH MANUFACTURER'S INSTALLATION GUIDELINES. PROVIDE 2" WCO. REFER TO ARCHITECTURAL DRAWINGS FOR CBC ACCESS MOUNTING HEIGHT. WEIGHT: 130 LBS ELECTRICAL: 115V/60HZ, 1 FLA, 370 WATTS
TD-1	TRENCH DRAIN	4"	3"	-	-	**MIFAB T2000 SERIES TRENCH DRAIN** SYSTEM CONSISTING OF **(1) T2020-PB POLYMER CONCRETE TRENCH DRAIN CHANNEL**, (1) T2020N-PB500 NEUTRAL CHANNEL SECTION, (1) T2000-PEC END CAP, (1) T2000-PEO CLOSING END CAP, (1) T2000-PGA-13-GM, (1) T2000-PGA-13-GM500 HEEL-PROOF GALVANIZED STEEL SLOTTED GRATES, AND (1) T2000-LT-EO END OUTLET ASSEMBLY. PROVIDE COMPLETE SYSTEM WITH ALL REQUIRED HARDWARE, FASTENERS, AND ACCESSORIES FOR A COMPLETE INSTALLATION.INSTALL TRENCH DRAIN FLUSH WITH FINISHED FLOOR IN ACCORDANCE WITH MANUFACTURER'S RECOMMENDATIONS. PROVIDE CONTINUOUS CONCRETE ENCASEMENT AROUND TRENCH DRAIN SYSTEM PER MANUFACTURER INSTALLATION REQUIREMENTS. COORDINATE REINFORCEMENT AND SLAB DEPRESSIONS WITH STRUCTURAL DRAWINGS.

PLUMBING FIXTURE AND EQUIPMENT SCHEDULE - ALTERNATE 3

MARK	FIXTURE	CONNECTION SIZES S or W	V	CW	HW	DESCRIPTION
WH-1	GAS WATER HEATER	-	-	1-1/2"	1-1/2"	BRADFORD WHITE #EF-60T-199E-3N(A), ASME RATED TANK ,GAS FIRED ULTRA LOW NOx STORAGE WATER HEATER, 92% THERMAL EFFICIENCY, 60 GALLON STORAGE CAPACITY, 317 GPH RECOVERY RATE AT 70°F TEMPERATURE RISE, 125°F SUPPLY TEMPERATURE, 199,000 BTUH INPUT, POWERED DIRECT VENT. PROVIDE 3" CPVC AIR INTAKE AND FLUE EXHAUST THRU ROOF #A2123601 CONDENSATE NEUTRALIZING KIT (OR EQUAL), SIZED FOR EQUIPMENT CAPACITY. ELECTRICAL: POWER BURNER ASSEMBLY WITH 1/3 HP, 120V, 2 AMP MOTOR. SIZE: 28.25"Ø x 57" HIGH OPERATING WEIGHT = 1,300 LBS.
TET-1	EXPANSION TANK	-	-	3/4"	-	AMTROL "THERM-X-TROL" #ST-12C-DD, 6.4 GALLON ASME RATED EXPANSION TANK WITH INLINE CONNECTIONS AND WITH FDA APPROVED BLADDER FOR POTABLE WATER USE. WT. = 87 LBS.

PLUMBING FIXTURE AND EQUIPMENT SCHEDULE

MARK	FIXTURE	CONNECTION SIZES S or W	V	CW	HW	DESCRIPTION
SA-1	SHOCK ARRESTOR	-	-	1"	-	SIOUX CHIEF "HYDRA-RESTER" #654-C, SEAMLESS COPPER CHAMBER APPROVED FOR CONCEALED INSTALLATION. P.D.I. SYMBOL "C" FOR UP TO 60 FIXTURE UNITS. INSTALL IN UPWARD POSITION. PROVIDE WITH ACCESS PANEL/DOOR.
SA-2	SHOCK ARRESTOR	-	-	3/4"	-	SIOUX CHIEF "HYDRA-RESTER" #653-B, SEAMLESS COPPER CHAMBER APPROVED FOR CONCEALED INSTALLATION. P.D.I. SYMBOL "B" FOR UP TO 32 FIXTURE UNITS. INSTALL IN UPWARD POSITION. PROVIDE WITH ACCESS PANEL/DOOR.
HB-1	HOSE BIBB (INSIDE)	-	-	3/4"	-	WOODFORD #24P-PC (OR MIFAB EQUAL) OPTIONAL POLISHED CHROME WALL HOSE VALVE WITH LOCKSHIELD, NON-REMOVABLE VACUUM BREAKER, AND OPTIONAL LOOSE TEE KEY HANDLE. WITH MODEL 34HD.
HB-2	HOSE BIBB (OUTSIDE)	-	-	3/4"	-	WOODFORD #24P-BR (OR MIFAB EQUAL) ROUGH BRASS WALL HOSE VALVE WITH LOCKSHIELD, NON-REMOVABLE VACUUM BREAKER, AND OPTIONAL LOOSE TEE KEY HANDLE WITH MODEL 34HD.
HB-3	HOSE BIBB (ROOF)	-	-	3/4"	-	WOODFORD #Y24-BR (OR MIFAB EQUAL) ROUGH BRASS STANDPIPE HOSE VALVE WITH NON-REMOVABLE VACUUM BREAKER, & OPTIONAL LOOSE TEE KEY HANDLE WITH MODEL 34HD.
WF-1	WATER FILTER ICE MACHINE	-	-	1/2"	-	PENTAIR EVERPURE "INSURE-ICE SINGLE i2000" #EV9324-01 w/#EV9612-22. 0.5 MICRON CARTRIDGE. PROVIDE (2) ADDITIONAL CARTRIDGES, 1.67 GPM MAX. FLOW, 9,000 GALLONS RATED CAPACITY, UNION, SHUT OFF VALVE, AND WALL MOUNTING BRACKET. DIMENSIONS: 29.5H x .04"W x 5.25"D. WEIGHT: 9 LBS
TP-1	TRAP PRIMER	-	-	1/2"	-	PRECISION PLUMBING PRODUCTS #P1-500 FOR UP TO (4) DRAINS SERVED #DU-4 DISTRIBUTION UNIT, #D-1212SS-CL, 12"x12" STAINLESS STEEL ACCESS PANEL w/CYLINDER LOCK, PAINT TO MATCH WALL IN NON-TILE AREAS.
TP-2	ELECTRONIC TRAP PRIMER	-	-	3/4"	-	PRECISION PLUMBING PRODUCTS MODEL #PT-4 (OR MIFAB EQUAL) RECESSED/ FLUSH MOUNT CABINET WITH PRIMER COAT ACCESS DOOR, (PAINT TO MATCH WALL), AND CYLINDER LOCK. PROVIDE STAINLESS STEEL DOOR IN AREAS WITH CERAMIC TILE WALL FINISH. TRAP PRIMER IS FACTORY ASSEMBLED AND PRE-PIPED WITH COPPER MANIFOLD, INLET BALL VALVE, ELECTRIC SOLENOID VALVE, TIMER, AND VACUUM BREAKER. ELECTRICAL REQUIRED: 120V / 1a 2 AMPS, REFER TO DRAWINGS FOR NUMBER OF DRAINS SERVED.
RD-1	ROOF DRAIN AND OVERFLOW DRAIN	-	-	-	-	PRIMARY ROOF DRAIN: JAY R. SMITH #1310Y-E-C-R-G-CIDG, (OR MIFAB OR ZURN EQUAL), 12" DIAMETER GALVANIZED CAST IRON BODY WITH GALVANIZED CAST IRON DOME, UNDERDECK CLAMP, SUMP RECEIVER AND EXTENSION AS REQUIRED. PROVIDE 4 LB. LEAD FLASHING ON TOP OF ROOF DECK PEENED IN AND CLAMPED TO ROOF DRAIN. SEE DWGS FOR OUTLET SIZE. OVERFLOW ROOF DRAIN: JAY R. SMITH #1310Y-E-C-R-WD04-G-CIDG, (OR MIFAB OR ZURN EQUAL), 12" DIAMETER GALVANIZED CAST IRON BODY WITH GALVANIZED CAST IRON DOME, UNDERDECK CLAMP, SUMP RECEIVER, EXTENSIONS AS REQUIRED AND 4" HIGH CAST IRON WATER DAM. INSTALL SAME AS ROOF DRAIN. SEE DRAWINGS FOR OUTLET SIZE. CONFIRM WITH ARCHITECTURAL DETAILS A1 AND J1, SHEET X/A503 PRIOR TO ORDERING. NOTES: 1. PROVIDE ROOF AND/OR OVERFLOW DRAINS WITH SIDE OUTLETS (JAY R. SMITH #1320Y-E) WHERE INDICATED ON PLANS OR WHERE STRUCTURAL OR CONSTRUCTABILITY CONDITIONS PROHIBIT INSTALLATION OF THE STANDARD ROOF DRAIN BODY. 2. POSSIBLE LONG LEAD TIME FOR EXTENSIONS, ORDER ROOF AND OVERFLOW DRAIN ASSEMBLY EARLY. NO JOBSITE FABRICATED EXTENSIONS ALLOWED.
RD-2	ROOF DRAIN	-	-	-	-	JAY R. SMITH #1320-C-R-G-CIDG, (OR MIFAB OR ZURN EQUAL), 12" DIAMETER GALVANIZED CAST IRON BODY WITH GALVANIZED CAST IRON DOME, UNDERDECK CLAMP AND SUMP RECEIVER. PROVIDE 4 LB. LEAD FLASHING ON TOP OF ROOF DECK PEENED IN AND CLAMPED TO ROOF DRAIN. SEE DWGS FOR OUTLET SIZE. PROVIDE WITH EXTENSIONS AS REQUIRED.
OD-1	ROOF DRAIN	-	-	-	-	JAY R. SMITH #1310-C-R-G-CIDG, (OR MIFAB OR ZURN EQUAL), 12" DIAMETER GALVANIZED CAST IRON BODY WITH GALVANIZED CAST IRON DOME, UNDERDECK CLAMP AND SUMP RECEIVER. PROVIDE 4 LB. LEAD FLASHING ON TOP OF ROOF DECK PEENED IN AND CLAMPED TO ROOF DRAIN. SEE DWGS FOR OUTLET SIZE. PROVIDE WITH EXTENSIONS AS REQUIRED.
DC-1	DOWN SPOUT COVER	3"	-	-	-	"JAY R. SMITH" #1775-U STAINLESS STEEL DOWNSPOUT COVER FOR OVERFLOW DRAIN WITH VANDAL PROOF SCREWS. SEE PLAN FOR SIZE.
CP-1	CIRCULATING PUMP	-	-	-	3/4"	B&G/XYLEM LEAD-FREE WET ROTOR CIRCULATOR #NBF-25, (OR GRUNDFOS OR TACO EQUAL), THREE SPEED IN-LINE CENTRIFUGAL PUMP WITH B&G/XYLEM FLANGED IPS CONNECTIONS WITH INTEGRAL BALL AND CHECK VALVES. FLANGE SIZE TO MATCH HWR PIPE SIZE, 125 WATTS, 2940 RPM, 2.30 FLA. XYL EM#TC-1 AND AQS-3/4" COMBINATION TIME CLOCK AND AQUASTAT. 120V/1Ø, 15 LBS

PLUMBING FIXTURE AND EQUIPMENT SCHEDULE

MARK	FIXTURE	CONNECTION SIZES S or W	V	CW	HW	DESCRIPTION
L-3 ♿	LAVATORY	2"	2"	1/2"	1/2"	KOHLER WALL-HUNG "KINGSTON" #K-2005, (OR AMERICAN STANDARD OR ZURN EQUAL) CBC ACCESS COMPLIANT, 21-1/4"x18", VIT. CHINA WITH 4" CENTERS, McGUIRE #155A GRID DRAIN, SLOAN MODEL # ETF-410-BOX-BDT-CP-0.5GPM-MLM-FCT OPTIMA HARD WIRED-POWERED, SENSOR OPERATED 0.5 GPM MULTI-LAMINAR SPRAY, DOUBLE INLET Y-FILTER TEE (W/ COMPRESSION CAP AND GASKET FOR SINGLE SUPPLY), THERMOSTATIC MIXING VALVE, DECK MOUNTED CHROME FAUCET, 24VAC BOX TRANSFORMER (INCLUDED WITH BOX MODELS)/0345370PK. JAY R. SMITH #723 CONCEALED ARMS, AND A STEEL SUPPORT PLATE FOR MOUNTING FIXTURE PER DETAIL D/PX1.1. REFER TO ARCHITECTURAL DRAWINGS FOR MOUNTING HEIGHT. ELECTRICAL: 120 VAC (24VAC BOX TRANSFORMER - INCLUDED WITH FAUCET).
L-4 ♿	LAVATORY	2"	2"	1/2"	1/2"	SLOAN MODEL #DSG-86000 "CORIAN" - SOLID SURFACE, 6-STATION, COLOR - GRANITE WHITE, WALL-MOUNTED GRADIENT SINK WITH CONTINUOUS TROUGH AND STRAIGHT EDGE TYPE. TWO PIECE 90° SEAMED DESIGN, CBC ACCESS COMPLIANT, WITH OPTIONAL ANGLED STAINLESS STEEL ENCLOSURE, WITH FAUCET AND WITHOUT SOAP DISPENSER. BUTTED TOGETHER WITH SEAMED JOINT (JOINT SEAMING BY SLOAN - VERIFY WITH OWNER). McGUIRE #155A GRID DRAIN SLOAN MODEL # ETF-410-BOX-BDT-CP-0.5GPM-MLM-FCT OPTIMA HARD WIRED-POWERED, SENSOR OPERATED 0.5 GPM MULTI-LAMINAR SPRAY, DOUBLE INLET Y-FILTER TEE (W/ COMPRESSION CAP AND GASKET FOR SINGLE SUPPLY), THERMOSTATIC MIXING VALVE, DECK MOUNTED CHROME FAUCET, 24VAC BOX TRANSFORMER (INCLUDED WITH BOX MODELS)/0345370PK. PROVIDE STEEL SUPPORT PLATE FOR MOUNTING FIXTURE PER DETAIL D/PX1.1. REFER TO ARCHITECTURAL DRAWINGS FOR MOUNTING HEIGHT. SIZE: (2) 90"L x 22"W x 5"H COLOR: GRANITE WHITE. ELECTRICAL: 120 VAC (EACH FAUCET) (24VAC BOX TRANSFORMER - INCLUDED WITH EACH FAUCET).
S-1	THREE COMP. SINK	2" IW	-	1/2"	1/2"	JUST #NSFB-345-24RL-J, FREE STANDING, NSF CERTIFIED, 14 GAUGE, TYPE 304 STAINLESS STEEL, TRIPLE COMPARTMENT SINK, (15"x24"x14" DEEP EACH BOWL SIZE), WITH 8" HIGH BACK SPLASH, AND 24" LONG LEFT AND RIGHT DRAIN BOARDS. (3) "JUST" # J-35LAC-2 TWIST HANDLE DRAINS (2) " CHICAGO" #445-L9E35ABCP BACKSPLASH MOUNT FAUCETS WITH 9" SWING SPOUT AND (1.5 GPM) FLOW OUTLET. (2) HOLES 8"O.C. CENTERED OVER PARTITIONS. OVERALL SINK LENGTH = 93".
S-2 ♿	HAND SINK	2"	2"	1/2"	1/2"	ADVANCE TABCO #7-PS-75 CBC ACCESS COMPLIANT WALL HUNG 18 GAUGE TYPE 304 STAINLESS STEEL WASH SINK (20"x18") WITH OPTIONAL #7-PS-16D 7-3/4" SIDE SPLASH, (RIGHT SIDE), 9" BACKSPLASH AND WALL MOUNTING BRACKET, "CHICAGO" #786-GN2FCXKABCP GOOSNECK FAUCET WITH (1.5 GPM) LAMINAR FLOW OUTLET AND VANDAL RESISTANT LEVER HANDLES, 8" FIXED CENTERS, JUST # J-15-FS GRID DRAIN WITH REMOVABLE STRAINER, 1-1/2" FLANGED TAILPIECE, LEONARD #170-LF-BP, POINT-OF-USE THERMOSTATIC MIXING VALVE WITH COLD WATER BYPASS AND WALL MOUNTING BRACKET BELOW FIXTURE WITH HARD PIPED WATER LINES. SET FAUCET SUPPLY TEMPERATURE TO 110°F. SEE ARCHITECTURAL DRAWINGS FOR MOUNTING HEIGHT.
MS-1	MOP SINK	3"	2"	1/2"	1/2"	KOHLER "WHITBY" #K-6710, 28" x 28" FLOOR MOUNT, CORNER STYLE ENAMELED CAST IRON MOP SINK WITH #K-8940 RIM GUARD, #K-9146 GRID DRAIN, CHICAGO #897-CCP (OR T&S BRASS EQUAL) WALL MOUNTED POLISHED CHROME FAUCET WITH VACUUM BREAKERS, INTERGAL CHECK VALVES, STOPS, AND WALL BRACE, FLORESTONE #MR-370 60" HOSE WITH WALL BRACKET AND #MR-372 MOP HANGER.
FD-1	FLOOR DRAIN	2"	1-1/2"	1/2" TP	-	JAY R. SMITH #2005Y-P050-HP (OR MIFAB EQUAL) DUCO CAST IRON BODY WITH 5" SQUARE NICKEL BRONZE STRAINER, NO-HUB OUTLET, TRAP PRIMER CONNECTION, AND HEELPROOF GRATE.
FD-2	FLOOR DRAIN	3"	2"	1/2" TP	-	JAY R. SMITH #2005Y-P050-HP (OR MIFAB EQUAL) DUCO CAST IRON BODY WITH 6" SQUARE NICKEL BRONZE STRAINER, NO-HUB OUTLET, TRAP PRIMER CONNECTION, AND HEELPROOF GRATE.
FS-1	FLOOR SINK	2"	1-1/2"	1/2" TP	-	JAY R. SMITH #3140-12, (OR MIFAB OR ZURN EQUAL) 12"x12"x6" DEEP WITH ANCHOR FLANGE, DOME BOTTOM STRAINER & NICKEL BRONZE RIM WITH HALF GRATE. SEE DWGS. FOR SIZE. INSTALL FLUSH WITH FINISH FLOOR. PROVIDE TRAP PRIMER CONNECTION WHERE APPLICABLE.
FS-2	FLOOR SINK	3"	2"	1/2" TP	-	JAY R. SMITH #3160-12, (OR MIFAB OR ZURN EQUAL) 12"x12"x10" DEEP WITH ANCHOR FLANGE, DOME BOTTOM STRAINER & NICKEL BRONZE RIM WITH HALF GRATE. INSTALL FLUSH WITH FINISH FLOOR. PROVIDE TRAP PRIMER CONNECTION WHERE APPLICABLE.
FS-3	FLOOR SINK	4"	2"	1/2" TP	-	JAY R. SMITH #3200Y-13-C, (OR MIFAB OR ZURN EQUAL) 18"x18"x12" DEEP WITH ANCHOR FLANGE, FLASHING CLAMP, DOME BOTTOM STRAINER & NICKEL BRONZE RIM WITH 3/4 GRATE. INSTALL FLUSH WITH FINISH FLOOR. PROVIDE TRAP PRIMER CONNECTION WHERE APPLICABLE. COORDINATE PLACEMENT OF FLOOR SINK WITH ARCHITECT AND EQUIPMENT DRAIN. PROVIDE FULL SIZE DRAIN WITH AIR GAP FROM EQUIPMENT TO FLOOR SINK.

PLUMBING FIXTURE AND EQUIPMENT SCHEDULE

MARK	FIXTURE	CONNECTION SIZES S or W	V	CW	HW	DESCRIPTION
WC-1	WATER CLOSET	4"	2"	1"	-	KOHLER "KINGSTON ULTRA" MODEL #K-84325-SS, VITREOUS CHINA, ELONGATED BOWL, SIPHON JET, WALL-HUNG WITH TOP INLET SPUD, AND ANTIMICROBIAL FINISH, (1.28 GPF), SLOAN "ROYAL" #111SFSM-1.28-CP-TMO POLISHED CHROME, EXPOSED SENSOR FLUSH VALVE, TRUE MECHANICAL OVERRIDE, BATTERY OPERATED, 1.28 GPM WATERSENSE COMPLIANT. OLSONITE #955SSCT EXTRA HEAVY DUTY OPEN-FRONT WHITE SEAT WITH SELF-SUSTAINING STAINLESS STEEL CHECK HINGES, JAY R. SMITH COMPACT FIXTURE SUPPORT SERIES (OR MIFAB EQUAL) #410Y SINGLE AND DOUBLE, VERTICAL BARREL OFFSET, LEFT AND/OR RIGHT HAND ORIENTATION, 4" ADJUST TO WALL COUPLING, CLOSET OUTLET GASKET, NO-HUB CONNECTION. REFER TO WATER CLOSET SUPPORT DETAILS J/PX1.1 AND K/PX1.1.
WC-2 ♿	WATER CLOSET	4"	2"	1"	-	KOHLER "KINGSTON ULTRA" MODEL #K-84325-SS, VITREOUS CHINA, ELONGATED BOWL, SIPHON JET, WALL-HUNG WITH TOP INLET SPUD, AND ANTIMICROBIAL FINISH, (1.28 GPF). SLOAN "ROYAL" #111SFSM-1.28-CP-TMO POLISHED CHROME, EXPOSED SENSOR FLUSH VALVE, TRUE MECHANICAL OVERRIDE, BATTERY OPERATED, 1.28 GPM WATERSENSE COMPLIANT. OLSONITE #955SSCT EXTRA HEAVY DUTY OPEN-FRONT WHITE SEAT WITH SELF-SUSTAINING STAINLESS STEEL CHECK HINGES, JAY R. SMITH COMPACT FIXTURE SUPPORT SERIES (OR MIFAB EQUAL) #410Y SINGLE AND DOUBLE, VERTICAL BARREL OFFSET, LEFT AND/OR RIGHT HAND ORIENTATION, 4" ADJUST TO WALL COUPLING, CLOSET OUTLET GASKET, NO-HUB CONNECTION. CBC ACCESS COMPLIANT - (SEE ARCHITECTURAL DRAWINGS FOR MOUNTING HEIGHT). MOUNT FLUSH VALVE HANDLE ON WIDE SIDE OF STALL OR ROOM. REFER TO WATER CLOSET SUPPORT DETAILS J/PX1.1 AND K/PX1.1.
U-1 ♿	URINAL	2"	2"	3/4"	-	KOHLER "BARDON" #K-4991-ETSS, CBC ACCESS COMPLIANT, (0.125 GPF), WASHOUT STYLE WITH STRAINER ANTIMICROBIAL FINISH, AND SLOAN "ROYAL" #186SFSM-0.125-CP-TMO POLISHED CHROME, EXPOSED SENSOR FLUSH VALVE, TRUE MECHANICAL OVERRIDE, BATTERY OPERATED, 0.125 GPM EPA WATERSENSE COMPLIANT. PROVIDE A 2" WCO ABV. FIXTURE. PROVIDE STEEL SUPPORT PLATE FOR MOUNTING FIXTURE PER DETAIL D/PX1.1. REFER TO URINAL SUPPORT DETAIL F/PX1.1. REFER TO ARCH. DWGS. FOR MOUNTING HEIGHT.
L-1 ♿	LAVATORY	2"	2"	1/2"	-	SLOAN MODEL #DSG-86000 "CORIAN" - SOLID SURFACE, 6-STATION, COLOR - GRANITE WHITE, WALL-MOUNTED GRADIENT SINK WITH CONTINUOUS TROUGH AND STRAIGHT EDGE TYPE. TWO PIECE 90° SEAMED DESIGN, CBC ACCESS COMPLIANT, WITH OPTIONAL ANGLED STAINLESS STEEL ENCLOSURE, WITH FAUCET AND WITHOUT SOAP DISPENSER BUTTED TOGETHER WITH SEAMED JOINT (JOINT SEAMING BY SLOAN - VERIFY WITH OWNER). McGUIRE #155A GRID DRAIN SLOAN MODEL # ETF-410-BOX-TEE-CP-0.5GPM-MLM-FCT OPTIMA HARD WIRED-POWERED, SENSOR OPERATED 0.5 GPM MULTI-LAMINAR SPRAY, DOUBLE INLET Y-FILTER TEE (W/ COMPRESSION CAP AND GASKET FOR SINGLE SUPPLY), DECK MOUNTED, HARD WIRED, CHROME FAUCET, 24VAC BOX TRANSFORMER (INCLUDED WITH BOX MODELS)/0345370PK. PROVIDE STEEL SUPPORT PLATE FOR MOUNTING FIXTURE PER DETAIL D/PX1.1. REFER TO ARCHITECTURAL DRAWINGS FOR MOUNTING HEIGHT SIZE: (2) 90"L x 22"W x 5"H COLOR: GRANITE WHITE. ELECTRICAL: 120 VAC (EACH FAUCET) (24VAC BOX TRANSFORMER - INCLUDED WITH EACH FAUCET).
L-2 ♿	LAVATORY	2"	2"	1/2"	-	KOHLER WALL-HUNG "KINGSTON" #K-2005, (OR AMERICAN STANDARD OR ZURN EQUAL) CBC ACCESS COMPLIANT, 21-1/4"x18", VIT. CHINA WITH 4" CENTERS, McGUIRE #155A GRID DRAIN, SLOAN MODEL # ETF-410-BOX-TEE-CP-0.5GPM-MLM-FCT OPTIMA HARD WIRED-POWERED, SENSOR OPERATED 0.5 GPM MULTI-LAMINAR SPRAY, DOUBLE INLET Y-FILTER TEE (W/ COMPRESSION CAP AND GASKET FOR SINGLE SUPPLY), DECK MOUNTED CHROME FAUCET, 24VAC BOX TRANSFORMER (INCLUDED WITH BOX MODELS)/0345370PK. JAY R. SMITH #723 CONCEALED ARMS, AND A STEEL SUPPORT PLATE FOR MOUNTING FIXTURE PER DETAIL D/PX1.1. REFER TO ARCHITECTURAL DRAWINGS FOR MOUNTING HEIGHT. ELECTRICAL: 120 VAC (24VAC BOX TRANSFORMER - INCLUDED WITH FAUCET).

PARLIER HS STADIUM REPLACEMENT

603 3rd Street
Parlier CA 93648

CLIENT PROJECT NO: 250093

DSA SUBMISSION 02-124002

DSA APPL. NO.: 02-124002 DSA FILE NO.: 10-H12

PBK
www.pbk.com
559-448-8400
FRESNO, CA

PARLIER UNIFIED SCHOOL DISTRICT

CLIENT
PARLIER UNIFIED SCHOOL DISTRICT

DATE	PROJECT NUMBER
YYYY/MM/DD	250093

DRAWING HISTORY

No.	Description	Date

CHECKED BY: Checker

DRAWN BY: Author

REGISTERED PROFESSIONAL ENGINEER
BRIAN W. EARLES
No. M34846
Exp. 6-30-28
MECHANICAL
STATE OF CALIFORNIA

LAWRENCE ENGINEERING GROUP
4910 E. Clinton Way, Suite 101 (559) 431-0101 Fresno, CA 93727 FAX (559) 431-1362
25106

PLUMBING SCHEDULES

PX2.1

19 June 2026 8:48 AM P:\2025\25106 Parlier HS Stadium Replacement\4-Drawings\5 PLPX2.1 - PLUMBING SCHEDULES.dwg rose

0"
1"

GENERAL PLUMBING NOTES:

1. THE INTENT OF THE DRAWINGS AND SPECIFICATIONS IS TO CONSTRUCT THE BUILDING IN ACCORDANCE WITH THE 2025 EDITION OF TITLE 24, CALIFORNIA CODE OF REGULATIONS. SHOULD ANY CONDITIONS DEVELOP NOT COVERED BY THE CONTRACT DOCUMENTS WHEREIN THE FINISHED WORK WOULD NOT COMPLY WITH SAID TITLE 24, CALIFORNIA CODE OF REGULATIONS, A CHANGE ORDER DETAILING AND SPECIFYING THE REQUESTED WORK SHALL BE SUBMITTED TO AND APPROVED BY DSA BEFORE PROCEEDING WITH THE WORK.

2. THE APPLICABLE CODES AND REGULATIONS FOR THIS PROJECT INCLUDE, BUT ARE NOT LIMITED TO, THE FOLLOWING:

   CALIFORNIA CODE OF REGULATIONS
   TITLE 8, INDUSTRIAL RELATIONS
   TITLE 19, PUBLIC SAFETY, STATE FIRE MARSHAL REGULATIONS
   TITLE 24, PART 1, ADMINISTRATIVE REGULATIONS
   2025 CALIFORNIA BUILDING CODE, PART 2, TITLE 24 CCR
   2025 CALIFORNIA ELECTRICAL CODE, PART 3, TITLE 24 CCR
   2025 CALIFORNIA MECHANICAL CODE, PART 4, TITLE 24 CCR
   2025 CALIFORNIA PLUMBING CODE, PART 5, TITLE 24 CCR
   2025 CALIFORNIA FIRE CODE, PART 9, TITLE 24 CCR

   NFPA 101 2024 EDITION
   OSHA - OCCUPATIONAL SAFETY AND HEALTH ACT

3. LAYOUT OF MATERIALS, EQUIPMENT AND SYSTEMS IS GENERALLY DIAGRAMMATIC UNLESS SPECIFICALLY DIMENSIONED. SOME WORK MAY BE SHOWN OFFSET FOR CLARITY. THE PLUMBING BUILDING PLANS HAVE BEEN PREPARED TO MATCH THE ARCHITECTURAL PLANS. IF DIFFERENCES OCCUR, THE ARCHITECTURAL PLANS ARE TO TAKE PRECEDENCE. THE ACTUAL LOCATIONS OF ALL MATERIALS, PIPING, DUCTWORK, FIXTURES, EQUIPMENT, SUPPORTS, ETC. SHALL BE CAREFULLY PLANNED, PRIOR TO INSTALLATION OF ANY WORK, TO AVOID ALL INTERFERENCE WITH EACH OTHER, OR WITH STRUCTURAL, ELECTRICAL, ARCHITECTURAL, OR OTHER ELEMENTS. ALL PIPE OFFSET ELBOWS FOR COORDINATION BETWEEN TRADES ARE NOT SHOWN. CONTRACTOR SHALL INCLUDE SUFFICIENT FUNDS FOR THE COORDINATION OFFSETS IN THE BID. VERIFY THE PROPER VOLTAGE AND PHASE OF ALL EQUIPMENT WITH THE ELECTRICAL PLANS. ALL CONFLICTS SHALL BE CALLED TO THE ATTENTION OF THE ARCHITECT AND THE ENGINEER PRIOR TO INSTALLATION OF ANY WORK OR THE ORDERING OF ANY EQUIPMENT.

4. WHEN INSTALLING DRILLED-IN ANCHORS AND/OR POWDER-DRIVEN PINS IN EXISTING NON-PRESTRESSED CONCRETE, USE CARE AND CAUTION TO AVOID CUTTING OR DAMAGING THE EXISTING REINFORCING BARS. WHEN INSTALLING THEM INTO EXISTING PRE-STRESSED CONCRETE (PRE- OR POST-TENSIONED), LOCATE THE PRESTRESSED TENDONS BY USING A NON-DESTRUCTIVE METHOD PRIOR TO INSTALLATION. MAINTAIN A MINIMUM CLEARANCE OF ONE INCH BETWEEN THE REINFORCEMENT AND THE DRILLED-IN ANCHOR AND/OR PIN.

5. **MEP COMPONENT ANCHORAGE NOTE:**

   ALL MECHANICAL, PLUMBING, AND ELECTRICAL COMPONENTS SHALL BE ANCHORED AND INSTALLED PER THE DETAILS ON THE DSA APPROVED CONSTRUCTION DOCUMENTS. THE FOLLOWING COMPONENTS SHALL BE ANCHORED OR BRACED TO MEET THE FORCE AND DISPLACEMENT REQUIREMENTS PRESCRIBED IN THE 2025 CBC, SECTIONS 1617A.1.18 THROUGH 1617A.1.26 AND ASCE 7-22 CHAPTERS 13, 26 AND 30.

   1. ALL PERMANENT EQUIPMENT AND COMPONENTS.
   2. TEMPORARY, MOVEABLE OR MOBILE EQUIPMENT THAT THAT IS PERMANENTLY ATTACHED (E. HARD WIRED) TO THE BUILDING UTILITY SERVICES SUCH AS ELECTRICITY, GAS OR WATER. "PERMANENTLY ATTACHED" SHALL INCLUDE ALL ELECTRICAL CONNECTIONS EXCEPT PLUGS FOR 110/220 VOLT RECEPTACLES HAVING A FLEXIBLE CABLE.
   3. TEMPORARY, MOVABLE, OR MOBILE EQUIPMENT WHICH IS HEAVIER THAN 400 POUNDS OR HAS A CENTER OF MASS LOCATED 4 FEET OR MORE ABOVE THE ADJACENT FLOOR OR ROOF LEVEL THAT DIRECTLY SUPPORT THE COMPONENT IS REQUIRED TO BE RESTRAINED IN A MANNER APPROVED BY DSA.

   THE FOLLOWING MECHANICAL AND ELECTRICAL COMPONENTS SHALL BE POSITIVELY ATTACHED TO THE STRUCTURE, BUT NEED NOT DEMONSTRATE DESIGN COMPLIANCE WITH THE REFERENCES NOTED ABOVE. THESE COMPONENTS SHALL HAVE FLEXIBLE CONNECTIONS PROVIDED BETWEEN THE COMPONENT AND ASSOCIATED DUCTWORK, PIPING, AND CONDUIT. FLEXIBLE CONNECTIONS MUST ALLOW MOVEMENT IN BOTH TRANSVERSE AND LONGITUDINAL DIRECTIONS.

   A. COMPONENTS WEIGHING LESS THAN 400 POUNDS AND HAVE A CENTER OF MASS LOCATED 4 FEET OR LESS ABOVE THE ADJACENT FLOOR OR ROOF LEVEL THAT DIRECTLY SUPPORT THE COMPONENT.
   B. COMPONENTS WEIGHING LESS THAN 20 POUNDS, OR IN THE CASE OF DISTRIBUTED SYSTEMS, LESS THAN 5 POUNDS PER FOOT, WHICH ARE SUSPENDED FROM A ROOF OR FLOOR OR HUNG FROM A WALL.

   THE ANCHORAGE OF ALL MECHANICAL, ELECTRICAL AND PLUMBING COMPONENTS SHALL BE SUBJECT TO THE APPROVAL OF THE DESIGN PROFESSIONAL IN GENERAL RESPONSIBLE CHARGE OR STRUCTURAL ENGINEER DELEGATED RESPONSIBILITY AND ACCEPTANCE BY DSA. THE PROJECT INSPECTOR WILL VERIFY THAT ALL COMPONENTS AND EQUIPMENT HAVE BEEN ANCHORED IN ACCORDANCE WITH THE ABOVE REQUIREMENTS.

   PIPING, DUCTWORK, AND ELECTRICAL DISTRIBUTION SYSTEM BRACING NOTE:

   PIPING, DUCTWORK, AND ELECTRICAL DISTRIBUTION SYSTEMS SHALL BE BRACED TO COMPLY WITH THE FORCES AND DISPLACEMENTS PRESCRIBED IN ASCE 7 SECTION 13.3 AS DEFINED IN ASCE 7 SECTIONS 13.6.5, 13.6.6, 13.6.7, AND 13.6.8; AND 2025 CBC SECTIONS 1617A.1.24, 1617A.1.25, 1617A.1.26.

   THE METHOD OF SHOWING BRACING AND ATTACHMENTS TO THE STRUCTURE FOR THE IDENTIFIED DISTRIBUTION SYSTEMS ARE AS NOTED BELOW. THE MEP DESIGN PROFESSIONAL ENGINEER RESPONSIBLE FOR CONTENT ON THESE SHEETS HAVE VERIFIED THAT THE DESIGN METHODS IDENTIFIED BELOW ARE IN ACCORDANCE WITH DSA IR 16-13.

   MECHANICAL PIPING (MP), MECHANICAL DUCTS (MD), PLUMBING PIPING (PP):

   MP ☐ MD ☐ PP ☒ OPTION 1: PROJECT SPECIFIC DESIGN.

   MP ☐ MD ☐ PP ☐ OPTION 2: DESIGN BASED ON OSHPD OPM, WITHIN PROJECT SUBMITTAL.

   MP ☐ MD ☐ PP ☐ OPTION 3: DESIGN BASED ON OSHPD OPM, DEFERRED SUBMITTAL.

6. BRACE ALL PIPING 3" DIAMETER AND GREATER; USE Ip=1.0 FOR SEISMIC DESIGN CALCULATIONS. EXCEPTION: NATURAL GAS PIPING GREATER THAN 1" DIAMETER, USE Ip=1.5 FOR SEISMIC DESIGN CALCULATIONS.

7. PENETRATIONS THROUGH FIRE RATED WALLS, FLOOR/CEILING, AND ROOF/CEILING ASSEMBLIES SHALL BE SEALED USING AN APPROVED SYSTEM CAPABLE OF PREVENTING THE PASSAGE OF FLAMES AND HOT GASES WHEN SUBJECTED TO THE REQUIREMENTS OF THE TEST STANDARD SPECIFIC TO FIRE STOPS PER 2025 CBC SECTION 714. THIS INCLUDES EXISTING PIPE AND CONDUIT THROUGH NEW ASSEMBLIES. CUSTOM DESIGNED SYSTEMS WHICH COMBINE COMPONENTS FROM DIFFERENT APPROVED SYSTEMS BUT HAVE NOT BEEN TESTED AS A COMPLETE ASSEMBLY WILL NOT BE ACCEPTABLE. FOR FIRE STOPS FOR PIPE PENETRATIONS SEE SPECIFICATIONS.

8. FIELD VERIFY THE EXACT LOCATION, DEPTH AND SIZE OF ALL NEW POINTS OF CONNECTION TO EXISTING UTILITIES PRIOR TO COMMENCING NEW UTILITY WORK.

9. ALL DOMESTIC WATER PIPING SHALL BE A MINIMUM OF 1/2" SIZE UNLESS NOTED OTHERWISE. USE A REDUCING DROP ELL AT FIXTURE CONNECTION WHEN APPLICABLE.

10. PRIOR TO ANY EXCAVATION OR TRENCHING OPERATIONS, CONTRACTOR SHALL CONTACT UNDERGROUND SERVICE ALERT (USA NORTH 811) AND ALL AFFECTED UTILITY OWNERS TO REQUEST LOCATION AND MARKING OF EXISTING UNDERGROUND FACILITIES. CONTRACTOR SHALL VERIFY THE LOCATION OF PUBLIC AND PRIVATE UTILITIES THROUGH FIELD INVESTIGATION, GROUND PENETRATING RADAR (GPR), AND OTHER APPROPRIATE METHODS AS REQUIRED. ANY CONFLICTS OR DISCREPANCIES BETWEEN EXISTING FIELD CONDITIONS AND THE CONSTRUCTION DOCUMENTS SHALL BE REPORTED TO THE ARCHITECT AND ENGINEER OF RECORD PRIOR TO COMMENCEMENT OF WORK. DAMAGE TO EXISTING UTILITIES RESULTING FROM CONTRACTOR ACTIVITY SHALL BE REPAIRED OR REPLACED AT THE CONTRACTOR'S EXPENSE.

RAINWATER PIPING - SIZING FOR 1.5"/HR RAINFALL RATE:

2025 CPC TABLE 1103.2 (EXCERPT): SIZING OF HORIZONTAL RAINWATER PIPING		
SIZE OF DRAIN PIPE (INCHES)	SLOPE VS. FLOW (GPM)	MAXIMUM ALLOWANCE HORIZONTAL PROJECTED ROOF AREA (SQUARE FEET)
3	1/8"/FT = 34	2,192
3	1/4"/FT = 48	3,093
3	1/2"/FT = 68	4,384
4	1/8"/FT = 78	5,013
4	1/4"/FT = 110	7,067
4	1/2"/FT = 156	10,027
6	1/8"/FT = 222	14,266
6	1/4"/FT = 314	20,134
6	1/2"/FT = 445	28,533

GAS PIPE SIZING: (PARLIER HS STADIUM REPLACEMENT)

TOTAL DEMAND: (EXISTING LOAD) = 2,235 CFH (2,235 MBH)
199 CFH (199 MBH)
2,434 CFH (2,434 MBH)

REFER TO 2025 CPC TABLE 1215.2 (6):
NATURAL GAS
INLET PRESSURE: 5 PSI
PRESSURE DROP: 3.5 IN. W.C.
SPECIFIC GRAVITY: 0.60

TOTAL DEVELOPED LENGTH FROM (E) METER TO MOST REMOTE FIXTURE IS 1200 FT.

USE 1200 FT. COLUMN.
TOTAL DEMAND: 2,434 CFH (2,434 MBH)

1-1/2" 5# GAS PIPE WILL DELIVER: 2,900 CFH (2,900 MBH)

REFER TO 2025 CPC TABLE 1215.2 (1):
NATURAL GAS
INLET PRESSURE: LESS THAN 2 PSI
PRESSURE DROP: 0.5 IN. W.C.
SPECIFIC GRAVITY: 0.60

TOTAL DEVELOPED LENGTH FROM NEW METER TO MOST REMOTE FIXTURE IS 100 FT.

USE 100 FT. COLUMN.
TOTAL DEMAND: 199 CFH (199 MBH)

1-1/4" GAS PIPE WILL DELIVER: 400 CFH (400 MBH)

GAS EQUIPMENT AT BLDG:
WATER HEATER: 199 CFH 199 MBH

TOTAL GAS LOAD AT BLDG: 199 CFH 199 MBH

SUPERSEDED PROFESSIONAL ENGINEER — JOHN W. EARLY — No. M34846 Exp. 6-30-28 — MECHANICAL — STATE OF CALIFORNIA

LAWRENCE ENGINEERING GROUP
4910 E. Clinton Way, Suite 101 (559) 431-0101
Fresno, CA 93727 FAX (559) 431-1362
25106

PBK
www.pbk.com
559-448-8400
FRESNO, CA

PARLIER HS STADIUM REPLACEMENT

CLIENT PROJECT NO: 250093
DSA SUBMISSION
DSA FILE NO. : 10-H12
DSA APPL. NO. : 02-124002

603 3rd Street
Parlier, CA 93648

PARLIER UNIFIED SCHOOL DISTRICT

CLIENT
PARLIER UNIFIED SCHOOL DISTRICT

DATE	PROJECT NUMBER
YYYY/MM/DD	250093

DRAWING HISTORY

No.	Description	Date

CHECKED BY: Checker
DRAWN BY: Author

PLUMBING NOTES & CALCS

PX2.2

19 June 2026 8:48 AM P:\2025\25106 Parlier HS Stadium Replacement\4-Drawings\5 PX\PX2.2 - PLUMBING NOTES & CALCS.dwg rose

ELECTRICAL NOTES
EX1.0
FOR BLUEBEAM LABELING/OCR:

0"
1"

System No. W-L-1003
February 14, 2008
F Ratings – 1 and 2 Hr (See Item 1)
T Rating – 0 Hr

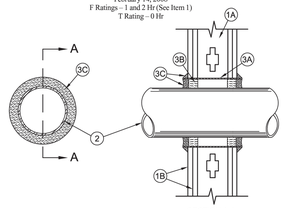

SECTION A-A

1. **Wall Assembly** – The 1 or 2 hr fire-rated gypsum board/stud wall assembly shall be constructed of the materials and in the manner described in the individual U300, U400 or V400 Series Wall and Partition Design in the UL Fire Resistance Directory and shall include the following construction features:
   A. **Studs** – Wall framing may consist of either wood studs or steel channel studs. Wood studs to consist of nom 2 by 4 in. (51 by 102 mm) lumber spaced 16 in. (406 mm) OC with nom 2 by 4 in. (51 by 102 mm) lumber end plates and cross braces. Steel studs to be min 3-1/2 in. (89 mm) wide by 1-3/8 in. (35 mm) deep channels spaced max 24 in. (610 mm) OC.
   B. **Gypsum Board*** – Nom 5/8 in. (16 mm) thick, 4 ft (1.2 m) wide with square or tapered edges. The gypsum board type, thickness, number of layers, fastener type and sheet orientation shall be as specified in the individual U300, U400 or V400 Series Design in the UL Fire Resistance Directory. Max diam of opening is 15 in. (381 mm).
   The hourly F Rating of the firestop system is equal to the hourly fire rating of the wall assembly in which it is installed.
2. **Through Penetrant** – One metallic pipe, conduit or tubing to be installed either concentrically or eccentrically within the firestop system. The space between pipes, conduits or tubing and the steel sleeve (Item 3A) shall be min of 0 in. (point contact) to max 2-3/8 in. (60 mm). Pipe, conduit or tubing to be rigidly supported on both sides of wall assembly. The following types and sizes of metallic pipes, conduits or tubing may be used:
   A. **Steel Pipe** – Nom 12 in. (305 mm) diam (or smaller) Schedule 10 (or heavier) steel pipe.
   B. **Iron Pipe** – Nom 12 in. (305 mm) diam (or smaller) service weight (or heavier) cast iron soil pipe, nom 12 in. (305 mm) diam (or smaller) or Class 50 (or heavier) ductile iron pressure pipe.
   C. **Conduit** – Nom 6 in. (152 mm) diam (or smaller) steel conduit or nom 4 in. (102 mm) diam (or smaller) steel electrical metallic tubing.
   D. **Copper Tubing** – Nom 6 in. (152 mm) diam (or smaller) Type L (or heavier) copper tubing.
   E. **Copper Pipe** – Nom 6 in. (152 mm) diam (or smaller) Regular (or heavier) copper pipe.
3. **Firestop System** – Installed symmetrically on both sides of wall assembly. The details of the firestop system shall be as follows.
   A. **Steel Sleeve** – Cylindrical sleeve fabricated from min 0.019 in. thick (0.48 mm) galv sheet steel and having a min 2 in. (51 mm) lap along the longitudinal seam. Length of steel sleeve to be equal to thickness of wall plus 1 to 4 in. (25 to 102 mm) such that, when installed, the ends of the sleeve will project approx 1/2 to 2 in. (13 to 51 mm) beyond the surface of the wall on both sides of the wall assembly.
   Sleeve installed by coiling the sheet steel to a diam smaller than the through opening, inserting the coil through the openings and releasing the coil to let it uncoil against the circular cutouts in the gypsum board layers.
   B. **Packing Material** – Min 1 in. (25 mm) thickness of mineral wool batt insulation firmly packed into steel sleeve on both sides of the wall assembly as permanent forms. Packing material to be recessed min 1/2 in. (13 mm) from end of steel sleeve (flush with or recessed into gypsum board surface) on both sides of wall assembly.
   B1. **Backing Material** – (Not shown) - As an alternate to Item B, nom 1 in. (25 mm) thick polyethylene backer rod may be used. The backer rod is to be recessed within the steel sleeve a min of 1 in. (25 mm) from each surface of wall.
   C. **Fill, Void or Cavity Materials*** – **Caulk or Sealant** – When mineral wool batt insulation is used, caulk or sealant applied to fill the steel sleeve to a min depth of 1/2 in. (13 mm) on both sides of wall assembly. When backer rod is used, a min thickness of 1 in. (25 mm) of caulk or sealant is required flush with both sides of wall. A nom 1/4 in. (6 mm) diam continuous bead of caulk or sealant shall be applied around the circumference of the steel sleeve at its egress from the gypsum board layers on both sides of the wall assembly.
   3M COMPANY – CP 25WB+, IC 15WB+ or FB-3000 WT

*Bearing the UL Classification Mark

This material was extracted and drawn by 3M Fire Protection Products from the 2008 edition of the UL Fire Resistance Directory. c UL us

System No. C-AJ-1366
December 04, 2008
F Rating – 2 Hr
T Rating – 0 Hr
L Rating At Ambient – Less Than 1 CFM/sq ft
L Rating At 400 F – 2 CFM/sq ft

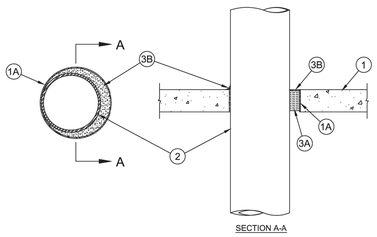

SECTION A-A

1. **Floor or Wall Assembly** – Min 2-1/2 in. (64 mm) thick reinforced lightweight or normal weight (100-150 pcf or 1600-2400 kg/m³) concrete floor or min 3 in. (76 mm) thick reinforced lightweight or normal weight (100-150 pcf or 1600-2400 kg/m³) concrete wall. Wall may also be constructed of any UL Classified **Concrete Blocks***. Max diam of opening is 10 in. (254 mm).
   See **Concrete Blocks** (CAZT) category in the Fire Resistance Directory for names of manufacturers.

1A. **Steel Sleeve** (Optional) – Nom 10 in. (254 mm) diam (or smaller) Schedule 10 (or heavier) steel pipe sleeve cast into concrete floor or wall. Sleeve to be flush with top and bottom surfaces of floor or both surfaces of wall.

2. **Through Penetrants** – One metallic pipe, tubing or conduit to be installed either concentrically or eccentrically within the firestop system. The annular space between tube and periphery of opening shall be min 0 in. to max 7/8 in. (22 mm). Penetrants to be rigidly supported on both sides of floor assembly. The following types and sizes of metallic pipes, tubing or conduit may be used:
   A. **Steel Pipe** – Nom 8 in. (203 mm) diam (or smaller) Schedule 10 (or heavier) steel pipe.
   B. **Iron Pipe** – Nom 8 in. (203 mm) diam (or smaller) cast or ductile iron pipe.
   C. **Conduit** – Nom 6 in. (152 mm) diam (or smaller) rigid steel conduit.
   D. **Conduit** – Nom 4 in. (102 mm) diam (or smaller) steel electrical metallic tubing.
   E. **Copper Tubing** – Nom 4 in. (102 mm) diam (or smaller) Type L (or heavier) copper tube.
   F. **Copper Pipe** – Nom 4 in. (102 mm) diam (or smaller) Regular (or heavier) copper pipe.
3. **Firestop System** – The details of the firestop system shall be as follows:
   A. **Packing Material** – Min 2 in. (51 mm) thickness of min 4 pcf (64 kg/m³) mineral wool batt insulation firmly packed into opening as a permanent form. Packing material to be recessed from top surface of floor or both surfaces of wall to accommodate the required thickness of fill material.
   B. **Fill, Void or Cavity Materials*** – **Caulk** – Min 1/2 in. (13 mm) thickness of caulk applied within the annulus, flush with top surface of floor or both surfaces of wall. Min 1/2 in. (13 mm) diam bead of caulk applied to the penetrant/concrete interface at the point contact location on the top surface of floor or both surfaces of wall.
   3M COMPANY – FireDam 150+

*Bearing the UL Classification Mark

This material was extracted and drawn by 3M Fire Protection Products from the 2009 edition of the UL Fire Resistance Directory. c UL us

1 CONDUIT PENETRATION FIRE STOP DETAIL
SCALE: NO SCALE

LOW VOLTAGE GENERAL SCOPE:

1. THE CONTRACTOR SHALL PROVIDE A COMPLETE AND OPERATIONAL DATA AND VOICE COMMUNICATIONS LOCAL AREA NETWORK (LAN), INCLUDING MAIN AND INTERMEDIATE DATA FRAMES, 24-STRAND SINGLEMODE FIBER OPTIC CABLING FROM THE CAMPUS IDF TO TELECOM RM. 123 IDF, 12-STRAND SINGLEMODE FIBER OPTIC CABLING FROM THE TELECOM RM. 123 IDF TO THE IDF RM. 126 IDF, FIBER OPTIC TERMINATIONS TO LC CONNECTORS (VERIFY AND MAINTAIN POLARITY), COPPER CAT6A HORIZONTAL CABLING THROUGHOUT, LABELING, LADDER RACKING, CABLE MANAGEMENT, MANAGED POWER DISTRIBUTION UNITS (PDUs), TERMINATION OF ALL CABLES, PATCH PANELS WITH PATCH CABLES FOR EVERY PORT (INCLUDING PORTS IN A PATCH PANEL THAT ARE UNUSED), COMMUNICATIONS GROUND BUS BAR AND GROUND CONNECTION, GROUNDING OF ALL METALLIC FRAMES AND LADDER RACKING WITH PAINT REMOVED AT LUGS, UNINTERRUPTABLE POWER SUPPLIES WITH 30 MINUTES BACKUP TIME, DATA AND COMMUNICATION OUTLETS, WIRELESS ACCESS POINT OUTLETS, CAMERA OUTLETS, AND TESTING AND REPORTS FOR ALL INSTALLED FIBER AND COPPER CABLES AND OUTLETS. NETWORK ELECTRONICS SUCH AS GATEWAYS AND SWITCHES SHALL BE FURNISHED BY THE OWNER AND INSTALLED BY THE CONTRACTOR. DELIVER REPORTS TO OWNER.
2. THE CONTRACTOR SHALL PROVIDE A COMPLETE AND OPERATIONAL IP PUBLIC ADDRESS SYSTEM, INCLUDING HEAD END SOFTWARE. INTERFACES WITH A/V SYSTEMS TO OVERRIDE THOSE SYSTEMS WHEN ANNOUNCEMENTS ARE MADE, INTERFACES WITH THE VOIP SYSTEM TO ALLOW ANNOUNCEMENTS BY USE OF HANDSETS, INTERFACE WITH FIRE ALARM SYSTEM TO DISPLAY A FIRE ALERT WHEN THE FIRE ALARM SYSTEM IS ACTIVATED, IP INDOOR AND OUTDOOR SPEAKERS, IP SPEAKER/CLOCKS, IP LARGE FORMAT DISPLAYS, LICENSES, SYSTEM PROGRAMMING, OWNER COORDINATION DURING COMMISSIONING, AND TESTING AND REPORTS. NOTE A HYBRID IP-ANALOG SYSTEM IS NOT AN ACCEPTABLE SUBSTITUTION FOR THIS SYSTEM.
3. THE CONTRACTOR SHALL PROVIDE A COMPLETE AND OPERATIONAL, AUTOMATIC, FIRE ALARM SYSTEM WITH EMERGENCY VOICE/ALARM COMMUNICATIONS, TO INCLUDE CONTROL PANELS, ANNUNCIATORS, OPERATING CONSOLES, POWER SUPPLIES, AMPLIFIERS, PULL STATIONS, SMOKE AND HEAT DETECTION DEVICES, ADDRESSABLE INPUT AND OUTPUT MODULES, SPEAKER STROBES, SPEAKERS, 6-STRAND SINGLE MODE FIBER OPTIC CABLING LINK TO EXISTING CAMPUS FIRE ALARM SYSTEM, LOCAL COPPER CABLING, INTERFACE WITH IP PA SYSTEM DO DISPLAY "FIRE ALARM" ON THE CLOCK DISPLAY, LABELING, PROGRAMMING, TESTING, AND REPORTS. DELIVER REPORTS TO OWNER FOR REVIEW.
4. THE CONTRACTOR SHALL PROVIDE AN EMERGENCY RESPONDER RADIO COVERAGE SURVEY PER SECTION 285500 (BASE BID). IF THE RESULTS OF THE SURVEY SHOW INSUFFICIENT RADIO COVERAGE, THE CONTRACTOR SHALL PROVIDE A COMPLETE AND OPERATIONAL EMERGENCY RESPONDER RADIO AMPLIFICATION SYSTEM (ERRCS DAS) TO MEET FIRE CODE REQUIREMENTS (-95dBm IN 95% OF THE BUILDING) PER CFC 510 (ADDITIVE ALTERNATE BID). THE CONTRACTOR SHALL SUBMIT COMPLETE CONSTRUCTION DOCUMENTS, TO INCLUDE PLANS, LINE DIAGRAMS, DEVICE CONNECTION DETAILS, DEVICE MOUNTING DETAILS, BATTERY CALCULATIONS, CUT SHEETS, CONTRACTOR LICENSE, FACTORY AUTHORIZED INSTALLER CERTIFICATES, AND ANYTHING ELSE THAT IS REQUIRED BY THE AUTHORITY HAVING JURISDICTION (AHJ), AND SHALL MAKE ANY CORRECTIONS OR ADJUSTMENTS REQUIRED TO OBTAIN A PERMIT. PERMIT FEES SHALL BE PAID BY THE OWNER.

LOW VOLTAGE GENERAL NOTES:

1. THE ELECTRICAL CONTRACTOR SHALL CONTACT EACH SIGNAL SYSTEM VENDOR AND THOROUGHLY INVESTIGATE THE EXPANDABILITY OF ALL EXISTING SYSTEMS. THE CONTRACTOR'S BID SHALL INCLUDE ALL REQUIRED COMPONENTS, PROGRAMMING, CABLING, UPGRADES, ETC. TO INTEGRATE THE WORK SHOWN IN DIV. 26 DRAWINGS AND PROVIDE FOR FULLY FUNCTIONAL LOW VOLTAGE SYSTEMS.
2. EXISTING PULL BOX LOCATIONS ARE DIAGRAMMATIC. FIELD VERIFY EXACT LOCATIONS. ADD CONDUITS TO EXISTING PULL BOXES WHERE INDICATED. REPAIR ANY DAMAGE INCURRED.
3. TERMINAL CABINETS TO BE WIEGMANN RHC SERIES, OR EQUAL, W/ MOUNTING PANELS / PLYWOOD BACK BOARD. INSTALL ALL REQUIRED TERMINAL STRIPS, PUNCH DOWN BLOCKS, ETC.
4. INSTALL NYLON PULL LINE WITH ALL CABLE RUNS IN UNDERGROUND CONDUITS.
5. INSTALL CABLING IN J-HOOKS. SEE DETAIL E7/X/E104.

MEP COMPONENT ANCHORAGE NOTES

ALL MECHANICAL, PLUMBING, AND ELECTRICAL COMPONENTS SHALL BE ANCHORED AND INSTALLED PER THE DETAILS ON THE DSA-APPROVED CONSTRUCTION DOCUMENTS. THE FOLLOWING COMPONENTS SHALL BE ANCHORED OR BRACED TO MEET THE FORCE AND DISPLACEMENT REQUIREMENTS PRESCRIBED IN THE 2025 CBC SECTIONS 1617A.1.18 THROUGH 1617A.1.26 AND ASCE 7-22 CHAPTERS 13, 26, AND 30:

1. ALL PERMANENT EQUIPMENT AND COMPONENTS.
2. TEMPORARY, MOVABLE OR MOBILE EQUIPMENT THAT IS PERMANENTLY ATTACHED (E.G., HARD WIRED) TO THE BUILDING UTILITY SERVICES SUCH AS ELECTRICITY, GAS OR WATER. "PERMANENTLY ATTACHED" SHALL INCLUDE ALL ELECTRICAL CONNECTIONS EXCEPT PLUGS FOR 110/220 VOLT RECEPTACLES HAVING A FLEXIBLE CABLE.
3. TEMPORARY, MOVABLE OR MOBILE EQUIPMENT WHICH IS HEAVIER THAN 400 POUNDS OR HAS A CENTER OF MASS LOCATED 4 FEET OR MORE ABOVE THE ADJACENT FLOOR OR ROOF LEVEL THAT DIRECTLY SUPPORT THE COMPONENT IS REQUIRED TO BE RESTRAINED IN A MANNER APPROVED BY DSA.

THE FOLLOWING MECHANICAL AND ELECTRICAL COMPONENTS SHALL BE POSITIVELY ATTACHED TO THE STRUCTURE BUT NEED NOT DEMONSTRATE DESIGN COMPLIANCE WITH THE REFERENCES NOTED ABOVE. THESE COMPONENTS SHALL HAVE FLEXIBLE CONNECTIONS PROVIDED BETWEEN THE COMPONENT AND ASSOCIATED DUCTWORK, PIPING, AND CONDUIT. FLEXIBLE CONNECTIONS MUST ALLOW MOVEMENT IN BOTH TRANSVERSE AND LONGITUDINAL DIRECTIONS:

A. COMPONENTS WEIGHING LESS THAN 400 POUNDS AND HAVING A CENTER OF MASS LOCATED 4 FEET OR LESS ABOVE THE ADJACENT FLOOR OR ROOF LEVEL THAT DIRECTLY SUPPORT THE COMPONENT.
B. COMPONENTS WEIGHING LESS THAN 20 POUNDS, OR IN THE CASE OF DISTRIBUTED SYSTEMS, LESS THAN 5 POUNDS PER FOOT, WHICH ARE SUSPENDED FROM A ROOF OR FLOOR OR HUNG FROM A WALL.

THE ANCHORAGE OF ALL MECHANICAL, ELECTRICAL AND PLUMBING COMPONENTS SHALL BE SUBJECT TO THE APPROVAL OF THE DESIGN PROFESSIONAL IN GENERAL RESPONSIBLE CHARGE OR STRUCTURAL ENGINEER DELEGATED RESPONSIBILITY AND ACCEPTANCE BY DSA. THE PROJECT INSPECTOR WILL VERIFY THAT ALL COMPONENTS AND EQUIPMENT HAVE BEEN ANCHORED IN ACCORDANCE WITH THE ABOVE REQUIREMENTS.

MEP DISTRIBUTION SYSTEM BRACING NOTES FOR ELECTRICAL CONDUIT

PIPING, DUCTWORK, AND ELECTRICAL DISTRIBUTION SYSTEMS SHALL BE BRACED TO COMPLY WITH THE FORCES AND DISPLACEMENTS PRESCRIBED IN ASCE 7 SECTION 13.3 AS DEFINED IN ASCE 7 SECTIONS 13.6.5, 13.6.6, 13.6.7, AND 13.6.8; AND 2025 CBC, SECTIONS 1617A.1.24, 1617A.1.25 AND 1617A.1.26.

THE METHOD OF SHOWING BRACING AND ATTACHMENTS TO THE STRUCTURE FOR THE IDENTIFIED DISTRIBUTION SYSTEMS ARE AS NOTED BELOW. THE MEP DESIGN PROFESSIONAL ENGINEER RESPONSIBLE FOR CONTENT ON THESE SHEETS HAS VERIFIED THAT THE DESIGN METHODS IDENTIFIED BELOW ARE IN ACCORDANCE WITH DSA IR 16-13.

MECHANICAL PIPING (MP), MECHANICAL DUCTS (MD), PLUMBING PIPING (PP), ELECTRICAL DISTRIBUTION SYSTEMS (E):

MP ☐ MD ☐ PP ☐ E ■ OPTION 1: PROJECT-SPECIFIC DESIGN.

MP ☐ MD ☐ PP ☐ E ☐ OPTION 2: DESIGN BASED ON OSHPD OPM, WITHIN ROJECT SUBMITTAL.

MP ☐ MD ☐ PP ☐ E ☐ OPTION 3: DESIGN BASED ON OSHPD OPM, DEFERRED APPROVAL.

GENERAL ELECTRICAL NOTES:

1. ALL WORK SHALL MEET THE LATEST ADOPTED ADDITIONS OF THE CALIFORNIA CODE OF REGULATIONS, TITLE 24 AND ALL OTHER APPLICABLE REGULATIONS, WHICH INCLUDE:

CALIFORNIA BUILDING CODE	2025
CALIFORNIA ELECTRICAL CODE	2025
NON RESIDENTIAL CEC ENERGY STANDARDS	2025

2. NOTHING IN THE PLANS OR SPECIFICATIONS IS TO BE CONSTRUED TO PERMIT WORK NOT CONFORMING TO THESE CODES.
3. IT IS THE INTENTION OF THESE PLANS AND SPECIFICATIONS TO COVER EVERYTHING REQUIRED TO PROVIDE FOR COMPLETE AND OPERATIVE SYSTEMS. THE CONTRACTOR IS TO FURNISH LABOR, MATERIAL, TRANSPORTATION, EQUIPMENT, MISCELLANEOUS SERVICES, ETC. REQUIRED TO ACCOMPLISH THIS RESULT, ANYTHING WHICH MAY BE REASONABLY CONSTRUED AS A NECESSARY PART OF THE INSTALLATION IS TO BE INCLUDED, WHETHER OR NOT SPECIFICALLY SHOWN OR MENTIONED.
4. THE CONTRACTOR SHALL EXAMINE THE SITE AND EXISTING CONDITIONS AND MAKE ALLOWANCES IN THE BID FOR ANY CONDITIONS NOT SHOWN ON THE ELECTRICAL DOCUMENTS.
5. THE PLANS AND SPECIFICATIONS ARE INTENDED TO BE USED AS CONSTRUCTION GUIDELINES AND ARE NOT THE TOTAL INSTRUMENT OF CONTRACT DOCUMENTS. IT IS NOT THE INTENTION OF ANY CONSTRUCTION PLANS TO DIVIDE WORK AMONG DIFFERENT TRADES. VERIFY THE SCOPE OF WORK WITH THE ARCHITECT AND THE GENERAL CONTRACTOR.
6. ELECTRICAL ROUTING IS DIAGRAMMATIC ONLY. ACTUAL ROUTING & PHYSICAL CONDITIONS MAY VARY. THE CONTRACTOR IS RESPONSIBLE FOR DETERMINING THE ACTUAL ROUTING, CONNECTIONS, & PROVISION OF ALL APPURTENANCES NECESSARY FOR A COMPLETE & OPERATING SYSTEM.
7. ELECTRICAL EQUIPMENT SHALL HAVE AN APPROVED TESTING LABORATORY LABEL ATTACHED (UL, CSA ETC.) PER CEC 110.2.
8. PROVIDE LABELING AND DIRECTORIES FOR ALL SWITCHBOARDS AND PANELBOARDS PER CEC 408.4.
9. ELECTRICAL EQUIPMENT SHALL HAVE A SHORT CIRCUIT CURRENT RATING CAPABLE OF WITHSTANDING THE AVAILABLE SHORT CIRCUIT CURRENT PER CEC 110.9.
10. PROVIDE MINIMUM 30" WIDE x 78" HIGH x 36" DEEP [42" DEEP] WORK CLEARANCES IN FRONT OF PANELS, SERVICE OR EQUIPMENT RATED AT 120/208V 3Ø 4W [277/480V 3Ø 4W] PER CEC 110.26.
11. ELECTRICAL RECEPTACLE OUTLETS ON BRANCH CIRCUIT OF 30 AMPERES OR LESS AND COMMUNICATION SYSTEM RECEPTACLES SHALL BE MOUNTED BETWEEN 15" AFF AND 48" AFF AND SHALL COMPLY WITH CBC SECTION 11B-308. THE LOW REACH SHALL BE MEASURED TO THE BOTTOM OF THE OUTLET BOX AND THE HIGH REACH SHALL BE MEASURED TO THE TOP OF THE OUTLET BOX. IF THE REACH IS OBSTRUCTED (E.G. BY CASEWORK COUNTERS, ETC.), RECEPTACLES SHALL BE LOCATED WITHIN THE REACH RANGES SPECIFIED IN CBC 11B-308.2.2 AND 11B-308.3.2.
12. CONTROLS AND SWITCHES INTENDED TO BE USED BY THE OCCUPANT OF A ROOM OR AREA TO CONTROL LIGHTING AND RECEPTACLE OUTLETS, APPLIANCES, OR COOLING, HEATING AND VENTILATING EQUIPMENT SHALL BE MOUNTED BETWEEN 15" AFF AND 48" AFF AND SHALL COMPLY WITH CBC SECTION 11B-308. THE LOW REACH SHALL BE MEASURED TO THE BOTTOM OF THE OUTLET BOX AND THE HIGH REACH SHALL BE MEASURED TO THE TOP OF THE OUTLET BOX. IF THE REACH IS OBSTRUCTED (E.G. BY CASEWORK, COUNTERS, ETC.), SWITCHES AND CONTROLS SHALL BE LOCATED WITHIN THE REACH RANGES SPECIFIED IN CBC 11B-308.2.2 AND 11B-308.3.2.
13. ALL WALL AND SURFACE MOUNTED FIXTURES PROTRUDING IN THE PATH OF TRAVEL (POT) OR COMMON PEDESTRIAN WAYS SHALL COMPLY WITH CBC 11B-307.2, OR SHALL BE MOUNTED LESS THAN 27" AFF OR GREATER THAN 80" AFF, OR SHALL BE PROVIDED WITH A BARRIER CONFORMING TO CBC 11B-307.4.
14. EMERGENCY EGRESS LIGHTING SHALL PROVIDE A MINIMUM LUMINANCE OF 1 FOOTCANDLE AT THE WALKING SURFACE FOR A MINIMUM OF 90 MINUTES.
15. FIRE ALARM EQUIPMENT SHALL BE SERVED BY DEDICATED FIRE ALARM BRANCH CIRCUITS PER NFPA 72 10.6.5.1.2. THE CIRCUIT NUMBER SHALL BE PERMANENTLY IDENTIFIED AT THE FIRE ALARM EQUIPMENT PER NFPA 10.6.5.2.1. THE CIRCUIT BREAKER SHALL BE EQUIPPED WITH RED HANDLE AND LOCK-ON DEVICE, AND PERMANENTLY IDENTIFIED AS "FIRE ALARM CIRCUIT" PER NFPA 72 10.6.5.2.2, 10.6.5.2.3, 10.6.5.2.4, AND 10.6.5.4.
16. WIRING FOR 120/208V AND 277/480V SYSTEMS SHALL BE MIN. #12 AWG THWN-2 COPPER. ALL WIRING TO BE IN RACEWAYS. ALL RACEWAYS TO BE CONCEALED WITHIN WALLS & CEILINGS. WHERE EXISTING WALLS HAVE PLYWOOD TO REMAIN, MC CABLE & CUT-IN BOXES MAY BE USED FOR VERTICAL WIRING TO AVOID CUTTING WALLS FOR HORIZONTAL WIRING. FLEXIBLE CONDUIT FOR VERTICAL DATA CABLING RUNS MAY BE USED.
17. FEEDERS SIZE #4 AND LARGER SHALL BE MEGGER TESTED. TEST RESULTS SHALL BE SUBMITTED TO THE ENGINEER.
18. COLORS/FINISHES/MATERIALS FOR ALL ELECTRICAL DEVICES, PLATES, LIGHT FIXTURES, ETC. SHALL BE CHOSEN BY THE ARCHITECT.
19. CONTRACTOR SHALL EXTEND ALL SIGNAL AND FIRE ALARM SYSTEMS AS REQUIRED. MODIFY HEAD-IN EQUIPMENT TO ACCOMMODATE NEW DEVICES AS REQUIRED. VERIFY THE CONDITION AND EXPANDABILITY OF ALL HEAD-IN EQUIPMENT PRIOR TO BID AND MODIFY ACCORDINGLY.
20. CALL USA UNDERGROUND ALERT AND VERIFY WITH DISTRICT THE DESIRED ROUTING AND LOCATIONS OF UNDERGROUND CONDUITS AND STRUCTURES PRIOR TO TRENCHING.
21. EXISTING EQUIPMENT TO BE REMOVED AND/OR REPLACED SHALL BE DELIVERED TO THE DISTRICT MAINTENANCE DEPARTMENT OR DISPOSED OF, AT THE DISCRETION OF THE DISTRICT.
22. ALL CONDUITS UNDER CONCRETE OR ASPHALT WILL HAVE 24" MINIMUM COVER OF ROCK FREE NATIVE SOIL, METALLIC WARNING TAPE AT 12", AND NO ENCASEMENT REQUIRED. ALL CONDUITS THAT HAVE CONDUCTORS WITH A POTENTIAL OF 250 VOLT TO GROUND OR GREATER, THAT ARE NOT UNDER ASPHALT AND/OR CONCRETE SHALL REQUIRE 1,500 PSI CONCRETE ENCASEMENT, METALLIC WARNING TAPE AT 12", AND A MINIMUM COVER FROM TOP OF ENCASEMENT OF 24". ALL CONDUITS THAT HAVE CONDUCTORS WITH A POTENTIAL OF LESS THAN 250 VOLTS TO GROUND, THAT ARE NOT UNDER ASPHALT AND/OR CONCRETE WILL HAVE 30" MINIMUM COVER OF NATIVE SOIL, METALLIC WARNING TAPE AT 12" AND NO ENCASEMENT REQUIRED.
23. INSTALL GALVANIZED RIGID STEEL RISERS & ELBOWS WHERE THEY OCCUR. WRAP GALVANIZED RIGID STEEL BELOW GRADE. PVC SHALL NOT BE INSTALLED ABOVE GRADE.
24. CONDUIT INSTALLED ABOVE GRADE SHALL BE MIN. 3/4" TRADE SIZE. CONDUIT BELOW GRADE SHALL BE MIN. 1" TRADE SIZE.
25. PROVIDE (4) 1" CONDUIT STUBS FROM NEW ELECTRICAL PANEL TO ACCESSIBLE ATTIC SPACE FOR FUTURE USE.
26. CIRCUIT BREAKERS SERVING FIRE ALARM EQUIPMENT SHALL HAVE A RED HANDLE AND LOCK-ON DEVICE.
27. HOLES ARE NOT ALLOWED THROUGH TOP PLATES OF BEARING WALLS AND SHEAR WALLS.
28. INCLUDE FIRE STOP SYSTEMS REQUIRED FOR ALL WORK AFFECTED BY FIRE RATED ASSEMBLIES.
29. INCLUDE ALL WORK REQUIRED TO INVESTIGATE, DEMOLISH, & RECONNECT EXISTING ITEMS.

LIGHTING GENERAL NOTES:

1. THE CONTRACTOR SHALL PROVIDE A COMPLETE SYSTEM OF LIGHT FIXTURES AND CONTROLS THAT COMPLY WITH THE REQUIREMENTS OF CALIFORNIA ENERGY COMMISSION TITLE 24.
2. PROVIDE A COMPLETE AND OPERATIONAL CONTROLS PACKAGE IN LIGHTING AREAS. PROVIDE WALL SWITCHES, SENSORS, POWER PACKS, MISCELLANEOUS APPURTENANCES, FACTORY CABLING, AND FACTORY COMMISSIONING.
3. AN EQUAL SUBSTITUTE PACKAGE BY ANOTHER MANUFACTURER MAY BE ACCEPTABLE. CONTRACTOR SHALL BE RESPONSIBLE TO PROVIDE ALL REQUIRED COMPONENTS, ADDITIONAL WIRING FOR DIMMING OPERATION OF LIGHT FIXTURES, AND ANYTHING ELSE NEEDED FOR A COMPLETE AND OPERATIONAL SYSTEM. SUBMIT SUBSTITUTE PACKAGE, INCLUDING SHOP DRAWINGS, TO ENGINEER FOR REVIEW AND APPROVAL. FAILURE TO COMPLY WITH THIS REQUIREMENT MAY RESULT IN REJECTION OF SUBSTITUTE COMPONENTS.
4. THE PLANS GENERALLY SHOW THE LOCATION OF SWITCHES, SENSORS, CONTROL MODULES ETC. ACTUAL LOCATIONS AND INSTALLATION REQUIREMENTS SHALL BE DETERMINED BY THE MANUFACTURER. SUBMIT SHOP DRAWINGS TO ENGINEER FOR APPROVAL.
5. PROVIDE FACTORY COMMISSIONING, TO INCLUDE COMPLETE CONTROL WIRING/ CALIBRATION/ PROGRAMMING OF LIGHTING CONTROL COMPONENTS.
6. LIGHTING SYSTEM ACCEPTANCE TESTING IS REQUIRED AS PER TITLE 24. THE CONTRACTOR SHALL INCLUDE ACCEPTANCE TESTING COSTS IN BID. THE CONTRACTOR IS RESPONSIBLE TO MAKE ANY ADJUSTMENTS NECESSARY TO ACHIEVE ACCEPTANCE.
7. LIGHTING FIXTURE COLORS, WHEN NOT SPECIFIED, SHALL BE SELECTED BY THE ARCHITECT'S OFFICE. DO NOT SUBMIT COLORS THAT HAVE NOT BEEN APPROVED BY THE ARCHITECT.
8. THE OUTDOOR LIGHTING SYSTEMS SHALL COMPLY WITH ALL OF THE FOLLOWING:
   A. THE MINIMUM REQUIREMENTS IN CALIFORNIA ENERGY CODE FOR LIGHTING ZONE 3.
   B. BACKLIGHT, UPLIGHT, AND GLARE (BUG) RATINGS AS DEFINED IN IES TM-15-11.
   C. ALLOWABLE BUG RATINGS NOT EXCEEDING THOSE SHOWN ON TABLE 5.106.8. (CAL GREEN 5.106.8)

ELECTRICAL SYMBOLS:

- LIGHT FIXTURE, CEILING OR WALL MOUNTED
- LIGHT FIXTURE EQUIPPED WITH EMERGENCY BATTERY BACKUP
- LIGHT FIXTURE, RECESSED CEILING, SURFACE CEILING, OR WALL MOUNTED
- LIGHT FIXTURE WITH EMERGENCY BATTERY BACKUP
- EMERGENCY EXIT LIGHT
- SINGLE POLE SWITCH, WALL MOUNTED +48" TO TOP OF BOX, UNLESS OTHERWISE NOTED
- INV — INVERTER
- WALL MOUNTED DUAL TECH OCCUPANCY SENSOR SWITCH, 0-10V DIMMING, AT +48' AFF TO TOP OF BOX
- DIGITAL DIMMER SWITCH, AT +48' AFF TO TOP OF BOX
- G — DIGITAL "FRESCO GRAPHICAL TOUCHSCREEN DIMMING CONTROLLER AT +48 AFF TO TOP OF BOX
- M — DIGITAL OCCUPANCY SENSOR W/ PHOTOSENSOR DUAL-TECHNOLOGY CEILING MOUNT
- GW — DIGITAL GATEWAY
- BR — DIGITAL BRIDGE
- PP — DIMMING POWER PACK VERIFY 0-10V, 2- OR 3-WIRE MLV, OR ELV BY FIXTURE
- PP E — DIMMING POWER PACK W/ EMERGENCY CONTROL VERIFY 0-10V, 2- OR 3-WIRE MLV, OR ELV BY FIXTURE
- RR — RECEPTACLE RELAY CONTROLLED BY OCCUPANCY SENSOR
- DUPLEX RECEPTACLE, WALL MOUNTED +15" TO BOTTOM OF BOX, UNLESS OTHERWISE NOTED
- E — RED DUPLEX RECEPTACLE ON STANDBY POWER, WALL MOUNTED +15" TO BOTTOM OF BOX, UNLESS OTHERWISE
- PTV — DUPLEX RECEPTACLE, CEILING MOUNTED AT PROJECTION TELEVISION
- FOUR-PLEX RECEPTACLE, WALL MOUNTED +15" TO BOTTOM OF BOX, UNLESS OTHERWISE NOTED
- WEATHERPROOF, G.F.I. PROTECTED DUPLEX RECEPTACLE, WALL MOUNTED +15" TO BOTTOM OF BOX, UNLESS OTHERWISE NOTED
- G.F.I. PROTECTED DUPLEX RECEPTACLE, WALL MOUNTED +15" TO BOTTOM OF BOX, UNLESS OTHERWISE NOTED
- DUPLEX RECEPTACLE, HALF UN-SWITCHED & HALF LIGHTING CONTROLLER SWITCHED, WALL MOUNTED +15" TO BOTTOM OF BOX, UNLESS OTHERWISE NOTED. EATON #WR-20
- FOUR-PLEX RECEPTACLE, HALF UN-SWITCHED & HALF LIGHTING CONTROLLER SWITCHED, WALL MOUNTED +15" TO BOTTOM OF BOX, UNLESS OTHERWISE NOTED. EATON #(2)WR-20
- FLOOR POCKET OR BOX AS NOTED
- SPECIAL RECEPTACLE AS NOTED
- TV — TELEVISION LOCATION. INSTALL 1-GANG BOX W/ (1) 1"C. TO ACCESSIBLE ATTIC SPACE FOR DATA. INSTALL 4-11/16" SQ.x 3.3" DEEP BOX W/ (2) 2"C. KNOCKOUTS, 2-GANG RING, AND 2-GANG BRUSH WALL PLATE, W/ (1) 2"C. TO ACCESSIBLE ATTIC SPACE. PULL HDMI CABLE TO A/V SOURCE. PULL DATA TO IDF.
- FDM — FIRE/SMOKE DAMPER MOTOR
- JUNCTION BOX
- MOTOR CONNECTION AND FUSIBLE DISCONNECT SWITCH, FUSE AS REQUIRED, NEMA 3R FOR OUTDOOR
- MOTOR CONNECTION, STARTER W/ OVERLOADS, AND FUSIBLE DISCONNECT SWITCH, FUSE AS REQUIRED, NEMA 3R FOR OUTDOOR
- POWER DISTRIBUTION BOARD OR WIRE GUTTER AS NOTED
- T — TRANSFORMER
- TERMINAL CABINET OR CONTROL PANEL AS NOTED
- EXISTING CONDUIT/WIRING TO BE DEMOLISHED
- EXISTING CONDUIT/WIRING
- LV — LOW VOLTAGE LIGHTING CONTROL CABLING
- WIRES IN CONDUIT, CONCEALED IN OR UNDER FLOOR
- WIRES IN CONDUIT, CONCEALED IN WALL OR CEILING
- A-2 — HOMERUN OF CONDUIT AND WIRING, CIRCUIT NO. 2 TO PANEL 'A'
- CROSS HATCHES INDICATE NUMBER OF #12 AWG. CONDUCTORS IN CONDUIT, WHEN MORE THAN TWO. WIRE SIZE INDICATED ON PLANS WHEN OTHER #12 AWG. PROVIDE GROUND PER CEC

ELECTRICAL DETAILS
EX1.1
FOR BLUEBEAM LABELING/OCR:

0"
1"

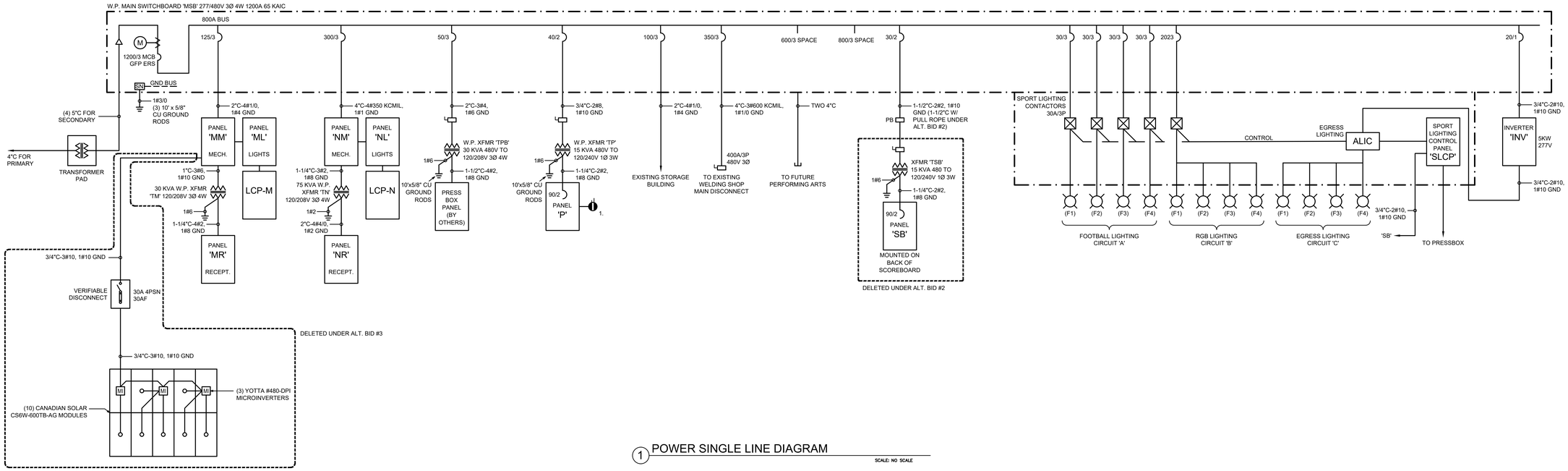

1 POWER SINGLE LINE DIAGRAM

SCALE: NO SCALE

PANEL 'MM' SCHEDULE — 277/480V 3ø 4W — INDOOR/SURFACE

CIRC NO	DESCRIPTION	BREAKER AMPS	BREAKER POLE	WATTS	P H	WATTS	BREAKER AMPS	BREAKER POLE	DESCRIPTION	CIRC NO
1	HEAT PUMP HP/M1	45	3	8313	A	2943	60	3	SUB PANEL 'ML'	2
3	----	--	--	8313	B	1392	--	--		4
5	----	--	--	8313	C	1865	--	--		6
7	SPACE ONLY				A				SPACE ONLY	8
9	SPACE ONLY				B				SPACE ONLY	10
11	SPACE ONLY				C				SPACE ONLY	12
13	SPACE ONLY				A				SPACE ONLY	14
15	SPACE ONLY				B				SPACE ONLY	16
17	SPACE ONLY				C				SPACE ONLY	18
19	SPACE ONLY				A				SPACE ONLY	20
21	SPACE ONLY				B				SPACE ONLY	22
23	SPACE ONLY				C				SPACE ONLY	24
25	SPACE ONLY				A				SPACE ONLY	26
27	SPACE ONLY				B				SPACE ONLY	28
29	SPACE ONLY				C				SPACE ONLY	30
31	SPACE ONLY				A				SPACE ONLY	32
33	SPACE ONLY				B				SPACE ONLY	34
35	SPACE ONLY				C				SPACE ONLY	36
37	XFMR	60	3	10823	A				SPACE ONLY	38
39	----	--	--	10618	B				SPACE ONLY	40
41	----	--	--	10028	C				SPACE ONLY	42
TOTAL WATTS:		PHASE A		22079	WATTS	MAIN:	125/3 MCB			
		PHASE B		20323	WATTS	BUS:	14 KAIC			
		PHASE C		20206	WATTS					
TOTAL CONNECTED LOAD:				62.61	KW					
MAXIMUM AMPS PER PHASE:				79.71	AMPS					

PANEL 'ML' SCHEDULE — 277/480V 3ø 4W — INDOOR/SURFACE

CIRC NO	DESCRIPTION	BREAKER AMPS	BREAKER POLE	WATTS	P H	WATTS	BREAKER AMPS	BREAKER POLE	DESCRIPTION	CIRC NO
1	LIGHTS - WOMEN'S RESTROOM	20	1	340	A	553	20	1	LIGHTS - TRACK BOLLARDS	2
3	LIGHTS - MEN'S RESTROOM	20	1	240	B	652	20	1	LIGHTS - POLES	4
5	LIGHTS - EXTERIOR	20	1	235	C	630	20	1	LIGHTS - BOLLARDS	6
7	EXTERIOR SIGNAGE	20	1	500	A	550	20	1	INV-M	8
9	EXTERIOR SIGNAGE	20	1	500	B	0	20	1	SPARE	10
11	SPOTLIGHT	20	1	1000	C	0	20	1	SPARE	12
13	SPOTLIGHT	20	1	1000	A	0	20	1	SPARE	14
15	SPARE	20	1	0	B				SPACE ONLY	16
17	SPACE ONLY				C				SPACE ONLY	18
19	SPACE ONLY				A				SPACE ONLY	20
21	SPACE ONLY				B				SPACE ONLY	22
23	SPACE ONLY				C				SPACE ONLY	24
TOTAL WATTS:		PHASE A		2943	WATTS	MAIN:	225A MLO			
		PHASE B		1392	WATTS	BUS:	14 KAIC			
		PHASE C		1865	WATTS					
TOTAL CONNECTED LOAD:				6.20	KW					
MAXIMUM AMPS PER PHASE:				10.62	AMPS					

PANEL 'MR' SCHEDULE — 120/208V 3ø 4W — INDOOR/SURFACE

CIRC NO	DESCRIPTION	BREAKER AMPS	BREAKER POLE	WATTS	P H	WATTS	BREAKER AMPS	BREAKER POLE	DESCRIPTION	CIRC NO
1	RECEPTACLES - ELECTRICAL	20	1	180	A	754	20	2	HEAT PUMP ODU/M1	2
3	RECEPTACLES - TICKET BOOTH	20	1	540	B	754	--	--		4
5	RECEPTACLES - RESTROOMS	20	1	540	C	754	20	2	HEAT PUMP ODU/M2	6
7	RECEPTACLES - TICKET BOOTH	20	1	540	A	754	--	--		8
9	RECEPTACLES - DRINKING FOUNTAINS	20	1	920	B	754	25	2	HEAT PUMP ODU/M3	10
11	RECEPTACLES - EXTERIOR	20	1	180	C	754	--	--		12
13	RECEPTACLES - ROOF	20	1	360	A	1560	30	1	EXHAUST FAN EF/M1	14
15	HANDWASHING SINKS	20	1	550	B	1725	20	1	HAND DRYER	16
17	RECEPTACLES - BENCH	20	1	900	C	1725	20	1	HAND DRYER MEN'S	18
19	SEARCH LIGHT	20	1	500	A	1725	20	1	HAND DRYER MEN'S	20
21	SPARE	20	1	0	B	1725	20	1	HAND DRYER MEN'S	22
23	SPARE	20	1	0	C	1725	20	1	HAND DRYER MEN'S	24
25	SPARE	20	1	0	A	1725	20	1	HAND DRYER MEN'S	26
27	SPACE ONLY				B	1725	20	1	HAND DRYER WOMEN'S	28
29	SPACE ONLY				C	1725	20	1	HAND DRYER WOMEN'S	30
31	SPACE ONLY				A	1725	20	1	HAND DRYER WOMEN'S	32
33	SPACE ONLY				B	1725	20	1	HAND DRYER WOMEN'S	34
35	SPACE ONLY				C	1725	20	1	HAND DRYER WOMEN'S	36
37	SPACE ONLY				A	1000	20	1	IDF-M	38
39	SPACE ONLY				B	200	20	1	FACP-M [1]	40
41	SPACE ONLY				C	0	20	1	SPARE	42
TOTAL WATTS:		PHASE A		10823	WATTS	MAIN:	100/3 MCB			
		PHASE B		10618	WATTS	BUS:	22 KAIC			
		PHASE C		10028	WATTS					
TOTAL CONNECTED LOAD:				31.47	KW		[1] PROVIDE RED LOCK-ON DEVICE			
MAXIMUM AMPS PER PHASE:				90.19	AMPS					

PANEL 'NM' SCHEDULE — 277/480V 3ø 4W — INDOOR/SURFACE

CIRC NO	DESCRIPTION	BREAKER AMPS	BREAKER POLE	WATTS	P H	WATTS	BREAKER AMPS	BREAKER POLE	DESCRIPTION	CIRC NO
1	HEAT PUMP HP/N1	20	3	5500	A	896	60	3	SUB PANEL 'NL'	2
3	----	--	--	5500	B	512	--	--	----	4
5	----	--	--	5500	C	522	--	--	----	6
7	HEAT PUMP HP/N2	40	3	10600	A	10253	50	3	DRYER	8
9	----	--	--	10600	B	10253	--	--	----	10
11	----	--	--	10600	C	10253	--	--	----	12
13	HEAT PUMP HP/N3	45	3	10000	A	10253	50	3	DRYER	14
15	----	--	--	10000	B	10253	--	--	----	16
17	----	--	--	10000	C	10253	--	--	----	18
19	SPACE ONLY	20	1	0	A	7205	30	3	WASHER	20
21	SPACE ONLY	20	1	0	B	7205	--	--	----	22
23	SPACE ONLY	20	1	0	C	7205	--	--	----	24
25	SPACE ONLY	20	1	0	A	7205	30	3	WASHER	26
27	SPACE ONLY	20	1	0	B	7205	--	--	----	28
29	SPACE ONLY	20	1	0	C	7205	--	--	----	30
31	SPACE ONLY	20	1	0	A	0	20	1	SPACE ONLY	32
33	SPACE ONLY	20	1	0	B	0	20	1	SPACE ONLY	34
35	SPACE ONLY	20	1	0	C	0	20	1	SPACE ONLY	36
37	XFMR	100	3	17880	A	0	30	3	PV INVERTER	38
39	----	--	--	15836	B	0	--	--	----	40
41	----	--	--	12683	C	0	--	--	----	42
TOTAL WATTS:		PHASE A		79792	WATTS	MAIN:	300/3 MCB			
		PHASE B		77364	WATTS	BUS:	14 KAIC			
		PHASE C		74221	WATTS					
TOTAL CONNECTED LOAD:				231.38	KW					
MAXIMUM AMPS PER PHASE:				288.06	AMPS					

REVISED UNDER ALT. BID #3

SPARE CIRCUIT BREAKERS UNDER ALT. BID #3

PANEL 'NL' SCHEDULE — 277/480V 3ø 4W — INDOOR/SURFACE

CIRC NO	DESCRIPTION	BREAKER AMPS	BREAKER POLE	WATTS	P H	WATTS	BREAKER AMPS	BREAKER POLE	DESCRIPTION	CIRC NO
1	LIGHTS - TEAM ROOM	20	1	577	A	319	20	1	LIGHTS - SOUTH EXTERIOR	2
3	LIGHTS - MEN'S RESTROOM	20	1	382	B	129	20	1	LIGHTS - NORTH EXTERIOR	4
5	LIGHTS - WOMEN'S RESTROOM	20	1	522	C	0	20	1	SPACE ONLY	6
7	SPARE	20	1	0	A	0	20	1	SPACE ONLY	8
9	SPARE	20	1	0	B	0	20	1	SPARE	10
11	SPARE	20	1	0	C	0	20	1	SPACE ONLY	12
13	SPACE ONLY	20	1	0	A	0	20	1	SPACE ONLY	14
15	SPACE ONLY	20	1	0	B	0	20	1	SPACE ONLY	16
17	SPACE ONLY	20	1	0	C	0	20	1	SPACE ONLY	18
19	SPACE ONLY	20	1	0	A	0	20	1	SPACE ONLY	20
21	SPACE ONLY	20	1	0	B	0	20	1	SPACE ONLY	22
23	SPACE ONLY	20	1	0	C	0	20	1	SPACE ONLY	24
TOTAL WATTS:		PHASE A		896	WATTS	MAIN:	225A MLO			
		PHASE B		512	WATTS	BUS:	14 KAIC			
		PHASE C		522	WATTS					
TOTAL CONNECTED LOAD:				1.93	KW					
MAXIMUM AMPS PER PHASE:				3.23	AMPS					

SPARE CIRCUIT BREAKERS UNDER ALT. BID #3

SPARE CIRCUIT BREAKERS UNDER ALT. BID #3

SPARE CIRCUIT BREAKERS UNDER ALT. BID #3

PANEL 'NR' SCHEDULE — 120/208V 3ø 4W — INDOOR/SURFACE

CIRC NO	DESCRIPTION	BREAKER AMPS	BREAKER POLE	WATTS	P H	WATTS	BREAKER AMPS	BREAKER POLE	DESCRIPTION	CIRC NO
1	RECEPTACLES - DRINKING FOUNTAINS	20	1	720	A	480	20	1	FLY FAN EF/1	2
3	RECEPTACLES - DRINKING FOUNTAINS	20	1	730	B	754	25	2	HEAT PUMP ODU/N1	4
5	RECEPTACLES - RESTROOMS	20	1	720	C	754	--	--	----	6
7	RECEPTACLES - RESTROOMS	20	1	720	A	768	15	1	EXHAUST FAN EF/N1	8
9	RECEPTACLES - DRINKING FOUNTAINS	20	1	910	B	144	15	1	EXHAUST FAN EF/N2	10
11	RECEPTACLES - LAUNDRY/ROOF	20	1	540	C	240	20	1	WATER HEATER WH/1	12
13	HANDWASHING SINKS	20	1	600	A	276	20	1	CIRC PUMP CP/1	14
15	IDF-N	20	1	1000	B	240	20	1	TRAP PRIMER TP/2	16
17	FACP-N [1]	20	1	200	C	240	20	1	TRAP PRIMER TP/2	18
19	RECEPTACLES - BENCH	20	1	540	A	1725	20	1	HAND DRYERS MEN'S	20
21	RECEPTACLES - BENCH	20	1	1440	B	1725	20	1	HAND DRYERS MEN'S	22
23	RECEPTACLES - BENCH	20	1	540	C	1725	20	1	HAND DRYERS MEN'S	24
25	RECEPTACLES - FRIDGE	20	1	720	A	1725	20	1	HAND DRYERS MEN'S	26
27	RECEPTACLES - HEATED CABINET	20	1	2000	B	1725	20	1	HAND DRYERS MEN'S	28
29	RECEPTACLES - ICE MAKER	20	1	1776	C	1725	20	1	HAND DRYERS	30
31	RECEPTACLES - ICE MAKER	20	1	1776	A	1725	20	1	HAND DRYERS	32
33	ICE MACHINE CONDENSER	20	1	218	B	1725	20	1	HAND DRYERS WOMEN'S	34
35	ICE MACHINE CONDENSER	20	1	218	C	1725	20	1	HAND DRYERS WOMEN'S	36
37	HOT DOG STEAMER	20	1	1350	A	1725	20	1	HAND DRYERS WOMEN'S	38
39	MICROWAVE OVEN	20	1	1500	B	1725	20	1	HAND DRYERS WOMEN'S	40
41	POPCORN POPPER	20	1	1920	C	0	20	1	SPARE	42
43	PIZZA DISPLAY WARMER	20	1	1700	A	0	20	1	SPARE	44
45	FOOD TOPPING WARMER	20	1	517	B	0	20	1	SPARE	46
47	SODA MACHINE	20	1	360	C	0	20	1	SPARE	48
49	COFFEE MACHINE	20	1	1370	A	0	20	1	SPARE	50
51	FIRE SMOKE DAMPER [1]	15	1	240	B	0	20	1	SPARE	52
53	SPARE	20	1	0	C	0	20	1	SPARE	54
TOTAL WATTS:		PHASE A		17880	WATTS	MAIN:	225/3 MCB			
		PHASE B		15836	WATTS	BUS:	22 KAIC			
		PHASE C		12683	WATTS					
TOTAL CONNECTED LOAD:				46.40	KW		[1] PROVIDE RED LOCK-ON DEVICE			
MAXIMUM AMPS PER PHASE:				149.00	AMPS					

PANEL 'SB' SCHEDULE — 120/240V 1ø 3W — OUTDOOR/SURFACE

CIRC NO	DESCRIPTION	BREAKER AMPS	BREAKER POLE	WATTS	P H	WATTS	BREAKER AMPS	BREAKER POLE	DESCRIPTION	CIRC NO
1	SCORE BOARD CIRCUIT	30	2	2500	A	2500	30	2	SCOREBOARD CIRCUIT	2
3	----	--	--	2500	B	2500	--	--	----	4
5	SPACE ONLY	20	1	0	A	0	20	1	SPACE ONLY	6
7	SPACE ONLY	20	1	0	B	0	20	1	SPACE ONLY	8
9	SPACE ONLY	20	1	0	A	0	20	1	SPACE ONLY	10
11	SPACE ONLY	20	1	0	B	0	20	1	SPACE ONLY	12
TOTAL WATTS:		PHASE A		5000	WATTS	MAIN:	60/2 MCB			
		PHASE B		5000	WATTS	BUS:	10 KAIC			
TOTAL CONNECTED LOAD:				10.00	KW					
MAXIMUM AMPS PER PHASE:				41.67	AMPS		SCOREBOARD MOUNTED			

DELETED UNDER ALT. BID #2

PANEL 'P' SCHEDULE — 120/240V 1ø 3W — OUTDOOR/SURFACE

CIRC NO	DESCRIPTION	BREAKER AMPS	BREAKER POLE	WATTS	P H	WATTS	BREAKER AMPS	BREAKER POLE	DESCRIPTION	CIRC NO
1	RECEPTACLE - PANEL	20	1	200	A	0	20	1	SPARE	2
3	RECEPTACLE - FOOTBALL/TRACK	20	1	1000	B	0	20	1	SPARE	4
5	RECEPTACLE - FOOTBALL/TRACK	20	1	1000	A	200	20	1	SLCP	6
7	RECEPTACLE - FOOTBALL/TRACK	20	1	1000	B	0	20	1	SPACE ONLY	8
9	SPACE ONLY	20	1	0	A	0	20	1	SPACE ONLY	10
11	SPACE ONLY	20	1	0	B	0	20	1	SPACE ONLY	12
TOTAL WATTS:		PHASE A		1400	WATTS	MAIN:	60/2 MCB			
		PHASE B		2000	WATTS	BUS:	10 KAIC			
TOTAL CONNECTED LOAD:				3.40	KW					
MAXIMUM AMPS PER PHASE:				16.67	AMPS		RACK MOUNTED			

SPARE CIRCUIT BREAKERS UNDER ALT. BID #3

DELETED UNDER ALT. BID #2

Plot Stamp:
6/22/2026 9:21:06 AM

PBK

www.pbk.com
559-448-8400
FRESNO, CA

PARLIER HS STADIUM REPLACEMENT

603 3rd Street
Parlier, CA 93648

CLIENT PROJECT NO. 250093

DSA SUBMISSION
DSA APPL. NO. : 02-124002 DSA FILE NO. : 10-H12

PARLIER UNIFIED SCHOOL DISTRICT

STATE OF CALIFORNIA — REGISTERED PROFESSIONAL ENGINEER — R.J. HARDIN — No. 9125 — ELECTRICAL

CLIENT	
PARLIER UNIFIED SCHOOL DISTRICT	
DATE	PROJECT NUMBER
YYYY/MM/DD	250093

DRAWING HISTORY

No.	Description	Date
1	RFI #003	06/03/2026
2	ADDENDUM #3	06/08/2026
3	ADDENDUM #4	06/12/2026

CHECKED BY: HDE

DRAWN BY: HDE

ELECTRICAL DETAILS

EX1.1

ELECTRICAL DETAILS
EX1.2
FOR BLUEBEAM LABELING/OCR:

0"
1"

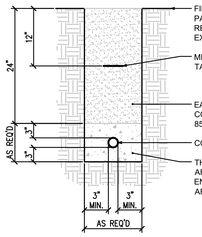

6 TYPICAL TRENCH DETAIL
SCALE: NO SCALE

EQUIPMENT	MAX WT	MAX H	MAX W	MAX D
INVERTER	2581 LBS	76 IN	48 IN	30 IN

1. INVERTER VALUES ARE FOR EACH SECTION.

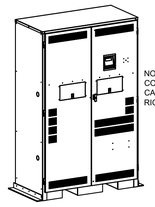

NOTE: FROM FRONT OF CABINET INPUT CONNECTIONS LOCATED ON LEFT SIDE OF CABINET OUTPUT CONNECTIONS LOCATED ON RIGHT SIDE OF CABINET

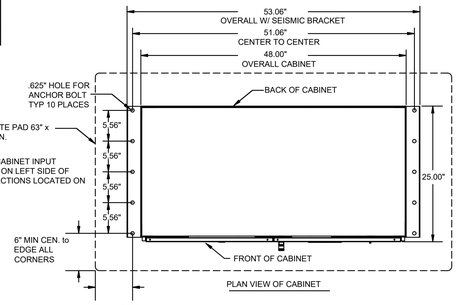

CONDUIT LOCATION DETAIL, TYP. BOTH SIDES
1.75" ID, 2.00" OD CONDUIT KNOCKOUTS CONDUIT KOCKOUTS ON SIDES ONLY NO BOTTOM ENTRY

INSTRUCTION FOR FIELD INSTALLED SEISMIC CABINETS
1. POSITION AND SECURE ELECTRONICS CABINET TO THE PAD USING HOLES PROVIDED IN ANGIES ON SIDES OF CABINET. REFER TO ANCHOR BOLT DETAIL.

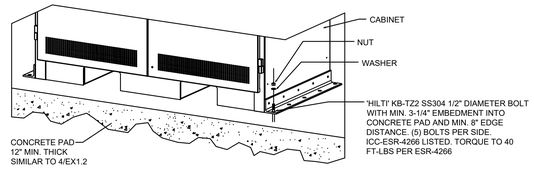

ANCHOR BOLT DETAIL, TYP. BOTH SIDES

3 PAD MOUNTED INVERTER MOUNTING DETAIL
SCALE: NO SCALE

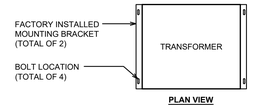

PLAN VIEW

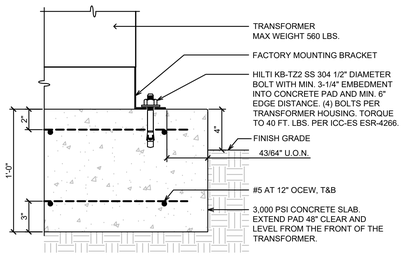

kVA RATING	VOLTAGE	WEIGHT	DIMENSIONS
15	480/240/120V 1Ø 3W	175 LBS	22.3"W x 23.8"D x 26.7"H
30	480/208/120V 3Ø 4W	340 LBS	25.8"W x 23.8"D x 28.8"H

8 TRANSFORMER CONCRETE PAD MOUNTING DETAIL
SCALE: NO SCALE

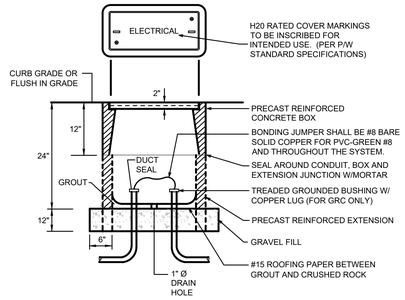

7 TYPICAL PULL BOX DETAIL
SCALE: NO SCALE

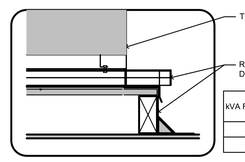

kVA RATING	VOLTAGE	WEIGHT	DIMENSIONS
30	480/208/120V 3Ø 4W	340 LBS	25.8"W x 23.8"D x 28.8"H
75	480/208/120V 3Ø 4W	590 LBS	28.3"W x 27"D x 36"H

9 TYPICAL TRANSFORMER MOUNTING DETAIL
SCALE: NO SCALE

EQUIPMENT	MAX WT	MAX H_{CG}	MAX W_{CG}	MAX L_{CG}	MIN S_1	MIN S_2
SWITCHBOARD[1]	600 LBS	31 IN	14 IN	24 IN	21 IN	36 IN

1. SWITCHBOARD VALUES ARE FOR EACH SECTION.

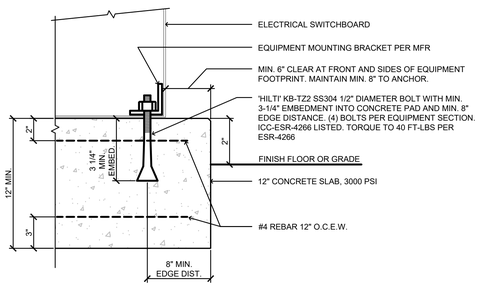

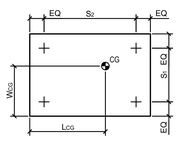

PLAN VIEW

4 SWITCHBOARD MOUNTING DETAIL
SCALE: NO SCALE

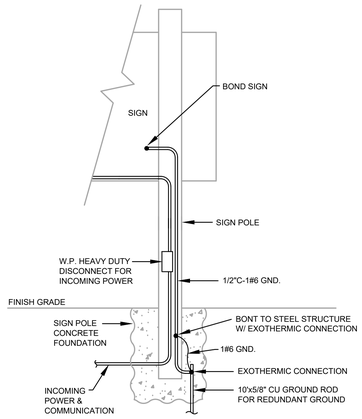

5 SCOREBOARD GROUNDING DETAIL
SCALE: NO SCALE

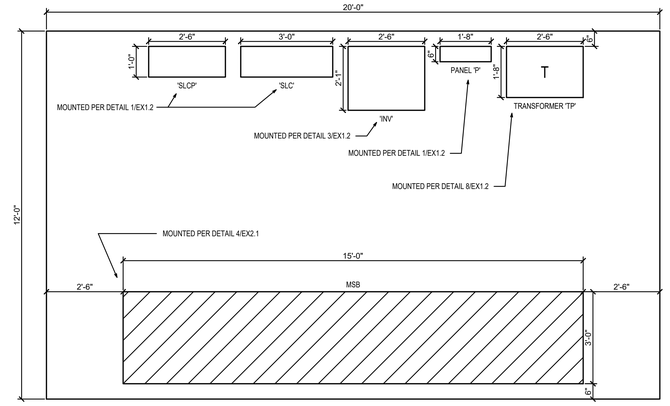

10 ELECTRICAL YARD PLAN
SCALE: 1/2"=1'-0"

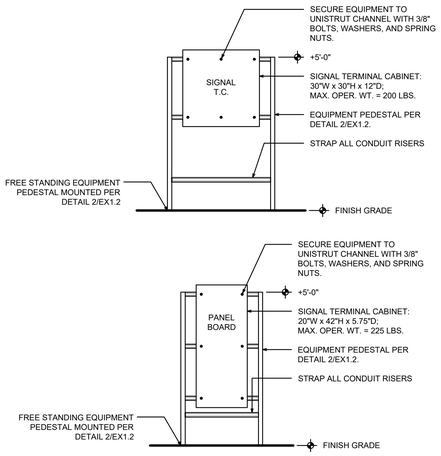

1 PEDESTAL EQUIPMENT ELEVATIONS
SCALE: NO SCALE

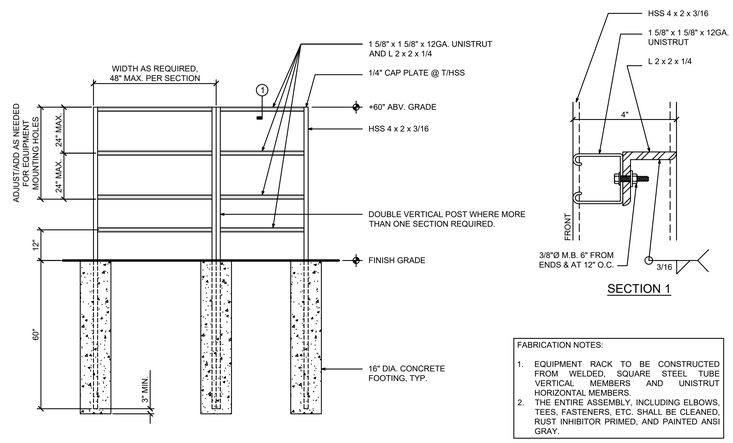

SECTION 1

FABRICATION NOTES:
1. EQUIPMENT RACK TO BE CONSTRUCTED FROM WELDED, SQUARE STEEL TUBE VERTICAL MEMBERS AND UNISTRUT HORIZONTAL MEMBERS.
2. THE ENTIRE ASSEMBLY, INCLUDING ELBOWS, TEES, FASTENERS, ETC. SHALL BE CLEANED, RUST INHIBITOR PRIMED, AND PAINTED ANSI GRAY.

2 FREE STANDING EQUIPMENT PEDESTAL DETAIL
SCALE: NO SCALE

PBK
www.pbk.com
559-448-8400
FRESNO, CA

PARLIER HS STADIUM REPLACEMENT

CLIENT PROJECT NO. 250093
DSA SUBMISSION
603 3rd Street
Parlier, CA 93648
DSA APPL. NO. : 02-124002 DSA FILE NO. : 10-H12

PARLIER UNIFIED SCHOOL DISTRICT

REGISTERED PROFESSIONAL ENGINEER R.J. HARDIN No. 9125 ELECTRICAL STATE OF CALIFORNIA

CLIENT
PARLIER UNIFIED SCHOOL DISTRICT
DATE: YYYY/MM/DD
PROJECT NUMBER: 250093

DRAWING HISTORY

No.	Description	Date
1	RFI #003	06/03/2026
2	ADDENDUM #3	06/09/2026
3	ADDENDUM #4	06/12/2026

CHECKED BY: HDE
DRAWN BY: HDE

ELECTRICAL DETAILS

EX1.2

Plot Stamp:
6/22/2026 9:21:06 AM

0"
1"

ELECTRICAL DETAILS
EX1.3
FOR BLUEBEAM LABELING/OCR:

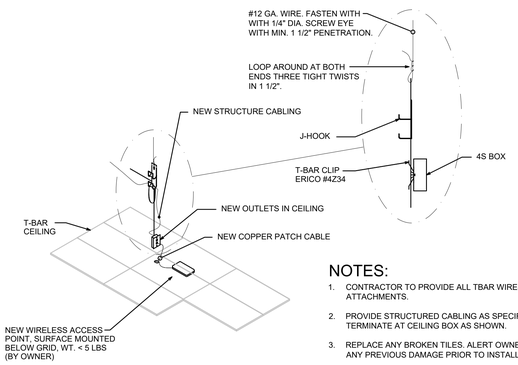

NOTES:

1. CONTRACTOR TO PROVIDE ALL TBAR WIRES AND ATTACHMENTS.
2. PROVIDE STRUCTURED CABLING AS SPECIFIED, TERMINATE AT CEILING BOX AS SHOWN.
3. REPLACE ANY BROKEN TILES. ALERT OWNER TO ANY PREVIOUS DAMAGE PRIOR TO INSTALLATION.

4 TYPICAL WIRELESS ACCESS POINT AT T-BAR CEILING
SCALE: NO SCALE

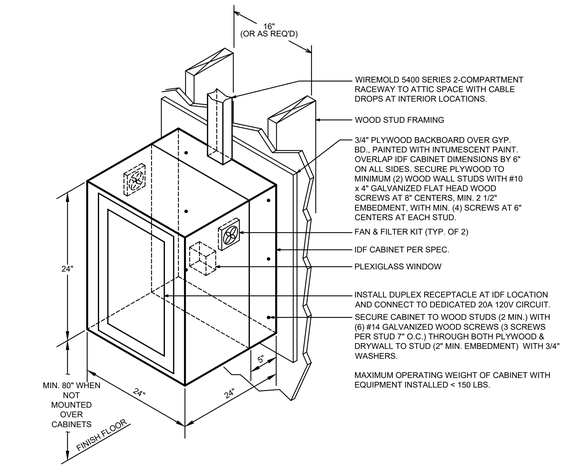

3 WALL MOUNT IDU CABINET MOUNTING DETAIL
SCALE: NO SCALE

STUD SPACING SHALL BE COORDINATED

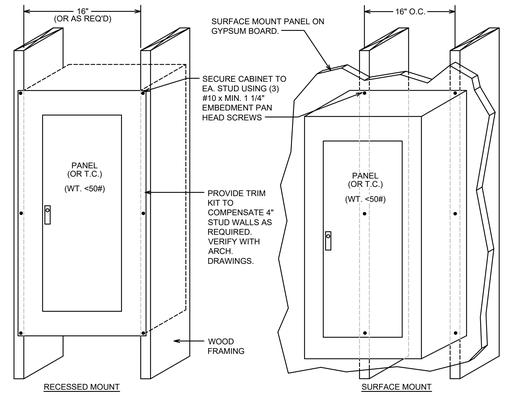

THIS DETAIL APPLIES TO EITHER NEW OR EXISTING WALL CONSTRUCTION. PANEL SHALL BE CENTERED OVER EXISTING STUD FRAMING.

NOTE:
SURFACE MOUNT EQUIPMENT PROTRUDING MORE THAN 4" FROM FACE OF WALL SHALL NOT BE LOCATED WITHIN CIRCULATION ROUTE OR MOUNT 27" MAXIMUM A.F.F. TO BOTTOM OF EQUIPMENT OR ADDED SKIRT.

1 ELECTRICAL PANEL MOUNTING DETAIL
SCALE: NO SCALE

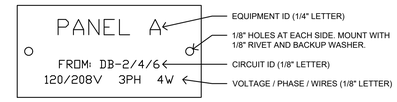

LABEL TYPE:	ENGRAVED 2 LAYER PHENOLIC (OR EQUAL)
LABEL SIZE:	3" W x 1-1/2" H
LABEL COLORS:	BLACK: 120/208/240V RED: 277/480V YELLOW: OVER 480V
TEXT COLOR:	WHITE (YELLOW TAGS SHALL BE BLACK TEXT)
EQUIPMENT ID:	SHALL BE AS IDENTIFIED ON THE PLANS BY THE EQUIPMENT SPECIFIER.
CIRCUIT ID:	SHALL BE THE CIRCUIT SOURCE SWITCHBOARD, PANEL, MCC, ETC.
VOLTAGE / PHASE / WIRES:	VOLTAGE SHALL BE THE COMPLETE VOLTAGE. PHASE SHALL BE EITHER 1PH OR 3PH. WIRES SHALL BE 2W, 3W, OR 4W.

2 PANEL LABELING DETAIL
SCALE: NO SCALE

NOTES:

1. FREE AIR CABLING APPLIES TO ACCESSIBLE ATTIC SPACES ONLY. INSTALL CABLING IN RACEWAYS IN INACCESSIBLE AREAS.
2. CABLING SHALL NOT BE INSTALLED ANYWHERE WHERE EXPOSED TO VIEW. IN EXPOSED AREAS, CABLING SHALL BE INSTALLED IN CONDUIT OR WIREMOLD, AS DIRECTED.
3. ALL HARDWARE & SUSPENSION WIRES SHALL BE PROVIDED BY ELECTRICAL CONTRACTOR.
4. THIS APPLIES TO ALL LOW VOLTAGE CABLING, INCLUDING FIRE ALARM.

5 J-HOOK CABLING SUPPORT DETAIL
SCALE: NO SCALE

PBK
www.pbk.com
559.448.8400
FRESNO, CA

PARLIER HS STADIUM REPLACEMENT
603 3rd Street
Parlier, CA 93648
CLIENT PROJECT NO: 250093
DSA SUBMISSION
DSA APPL. NO. : 02-124002 DSA FILE NO. : 10-H12

PARLIER UNIFIED SCHOOL DISTRICT

REGISTERED PROFESSIONAL ENGINEER
R. J. HARDIN
NO. 9125
ELECTRICAL
STATE OF CALIFORNIA

CLIENT	
PARLIER UNIFIED SCHOOL DISTRICT	
DATE: YYYY/MM/DD	PROJECT NUMBER: 250093

DRAWING HISTORY

No.	Description	Date
1	RFI #003	06/03/2026
2	ADDENDUM #3	06/09/2026
3	ADDENDUM #4	06/12/2026

CHECKED BY: HDE
DRAWN BY: HDE

ELECTRICAL DETAILS

EX1.3

Plot Stamp:
6/22/2026 9:21:06 AM

ELECTRICAL DETAILS
EX1.4
FOR BLUEBEAM LABELING/OCR:

0"
1"

LUMINAIRE SCHEDULE

TYPE	MANUFACTURER	DESCRIPTION	CATALOG#	LAMP	WATTS	VOLT	MOUNTING	REMARKS
A	ABL - LITHONIA	2X4 TROFFER	CPX 2X4 4000LM 80CRI 35K SWL MIN1 MVOLT NLTAIR2	LED	36.7	MVOLT	RECESSED	INTEGRAL WIRELESS MODULE
AE	ABL - LITHONIA	2X4 TROFFER	CPX 2X4 4000LM 80CRI 35K SWL MIN1 MVOLT NLTAIR2 E10W	LED	36.7	MVOLT	RECESSED	INTEGRAL WIRELESS SENSOR / EMERGENCY
AS	ABL - LITHONIA	2X4 TROFFER	CPX 2X4 4000LM 80CRI 35K SWL MIN1 MVOLT NLTAIR2 APDT	LED	36.7	MVOLT	RECESSED	INTEGRAL WIRELESS SENSOR
A1	ABL - LITHONIA	2X2 TROFFER	CPX 2X2 2000LM 80CRI 35K SWL MIN1 MVOLT NLTAIR2	LED	15.6	MVOLT	RECESSED	INTEGRAL WIRELESS MODULE
B	ABL - LUMINARELED	LINEAR	VPF8 4FT MIN10 25W 35K MVOLT OP WHT	LED	26.6	MVOLT	SURFACE	
BE	ABL - LUMINAIRELED	LINEAR	VPF8 4FT MIN10 25W 35K MVOLT OP WHT E10W	LED	26.6	MVOLT	SURFACE	INTEGRAL BATTERY
C	ABL - LITHONIA	DOWNLIGHT	LDN6 35/10 L06AR LSS MVOLT GZ10	LED	10.4	MVOLT	RECESSED	
CE	ABL - LITHONIA	DOWNLIGHT	LDN6 35/10 L06AR LSS MVOLT GZ10 E10WCP	LED	10.4	MVOLT	RECESSED	INTEGRAL BATTERY
D	ABL - LITHONIA	STRIP	CLX L48 3000LM SEF RDL MVOLT GZ10 35K 80CRI WH	LED	23	MVOLT	SURFACE	
K	COOPER - INVUE	WALL MOUNT	CCW SA1 D 840 U T2	LED	44	MVOLT	SURFACE	
L	PRUDENTIAL LTG	WALL MOUNT	WETBPRO-LIN-FLSH-LED4-LO-4'-WETXX-PFL-SC-UNV-WMC-WALL-DM01	LED	15.2	MVOLT	SURFACE	
M	ABL - LUMINIS	CANOPY	SN1100C L1L13 40K MVOLT SWK BKT	LED	14	MVOLT	SURFACE	
N	ABL - LITHONIA	WALL PACK	WDGE2 LED P2 40K 80CRI VF MVOLT SRM DBLXD	LED	19	MVOLT	SURFACE	
NE	ABL - LITHONIA	WALL PACK	WDGE2 LED P2 40K 80CRI VF MVOLT SRM DBLXD	LED	19	MVOLT	SURFACE	INTEGRAL BATTERY
P1	ABL - LITHONIA	SITE HEAD	DSX0-LED-P2-40K-70CRI-TFTM-MVOLT-SPA-PIR-DBLXD	LED	45	MVOLT	POLE	
	KW INDUSTRIES	POLE	SSP14-4.0-11-BLK-DM10-BC					
P2	ABL - LITHONIA	SITE HEAD	DSX0-LED-P2-40K-70CRI-T2M-MVOLT-SPA-PIR-DBLXD	LED	90	MVOLT	POLE	
	KW INDUSTRIES	POLE	SSP14-4.0-11-BLK-DM2180-BC					
SBL	NLS LIGHTING	BOLLARD - LIT	SSD-IMP-49-8RS20-LIT-PR-16L-7-40K7-UNV-XX	LED	35	MVOLT	BOLLARD	WITH LIGHT MODULE
SBU	NLS LIGHTING	BOLLARD - UNLIT	SSD-IMP-49-8RS20-UNL-XX					WITHOUT LIGHT MODULE
SE	TARGETTI	IN-GRADE	KPLM-41-ZWL-2-40 / 1DU2525B / 1DU4344-12 / 1DU2530	LED	14	MVOLT	RECESSED	
SG	ABL - HYDREL	IN-GRADE	M9720C A LED P2 40K MVOLT NSP FLCSR 34S BTR XX	LED	35	MVOLT	RECESSED	FLAG POLES
S1	TARGETTI	IN-GRADE	KPLM-41-HE-FL-L2-40 / 1DU2525A / 1DU2521 / 1DU2530	LED	14	MVOLT	RECESSED	
SL	FLYACHILLES	SPOTLIGHT	1000W [COLOR TEMP]	LED	1000	120	SURFACE	
X	ABL - LITHONIA	EXIT	LQC 1 G EL N	LED	1	MVOLT	WALL	

DELETED UNDER ALT. BID # 4

7 FIXTURE SCHEDULE
SCALE: NO SCALE

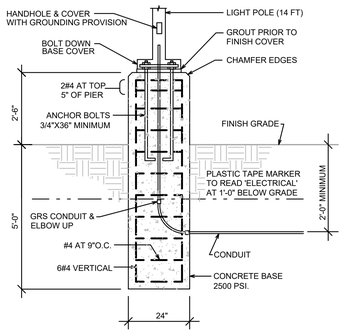

5 POLE LIGHT DETAIL
DSA STRUCTURAL REVIEW IS NOT REQUIRED PER DSA IR A-22

HEAVY DUTY GRID SYSTEM			
LIGHT FIXTURE DIMENSION	WEIGHT	NO. OF HANGER WIRES	TYPE
< 24" x 48"	< 56 LBS	2	SLACK
> 24" x 48"	> 56 LBS	4	TAUT

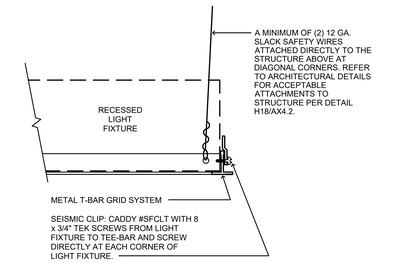

1 LAY-IN FIXTURE MOUNTING DETAIL
SCALE: NO SCALE

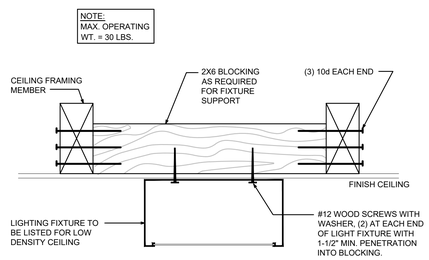

2 SURFACE FIXTURE MOUNTING DETAIL
SCALE: NO SCALE

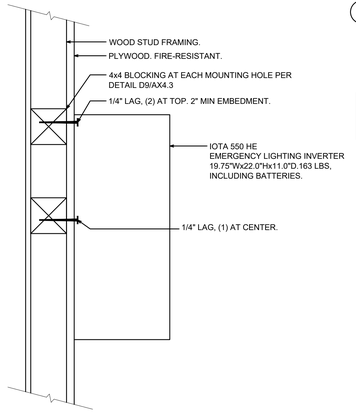

6 LIGHTING INVERTER WALL MOUNTING DETAIL
SCALE: NO SCALE

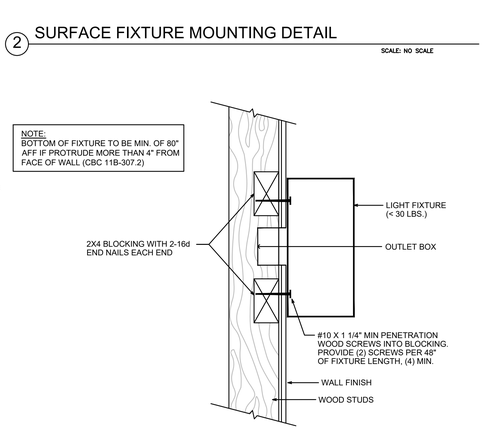

3 WALL FIXTURE SURFACE MOUNTING DETAIL
SCALE: NO SCALE

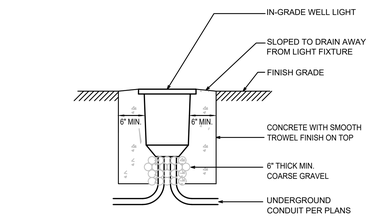

8 TYPICAL IN-GRADE WELL LIGHT DETAIL
SCALE: NO SCALE

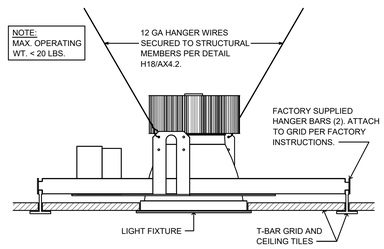

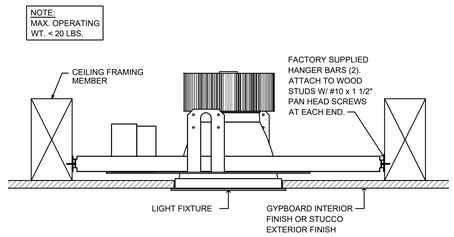

7 RECESSED DOWNLIGHT MOUNTING DETAIL
SCALE: NO SCALE

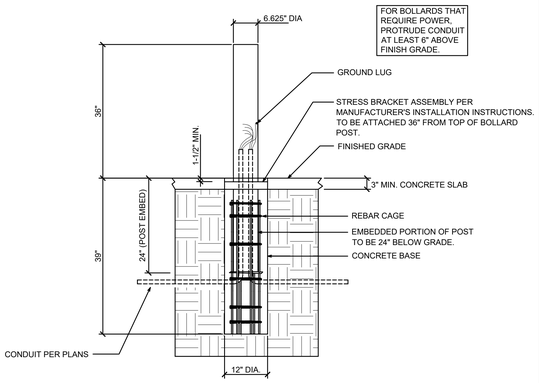

4 BOLLARD MOUNTING DETAIL
SCALE: NO SCALE

PARLIER HS STADIUM REPLACEMENT

603 3rd Street
Parlier, CA 93648

CLIENT PROJECT NO. 250093
DSA SUBMISSION 02 DSA FILE NO. : 10-H12
DSA APPL. NO. : 02:124002

PARLIER UNIFIED SCHOOL DISTRICT

REGISTERED PROFESSIONAL ENGINEER R.J. HARDIN NO. 9125 ELECTRICAL STATE OF CALIFORNIA

CLIENT	
PARLIER UNIFIED SCHOOL DISTRICT	
DATE	PROJECT NUMBER
YYYY/MM/DD	250093

DRAWING HISTORY

No.	Description	Date
1	RFI #003	06/03/2026
2	ADDENDUM #3	06/09/2026
3	ADDENDUM #4	06/12/2026

CHECKED BY: HDE
DRAWN BY: HDE

ELECTRICAL DETAILS

EX1.4

PBK
www.pbk.com
559.448.8400
FRESNO, CA

Plot Stamp:
6/22/2026 9:21:06 AM

FIRE ALARM INFORMATION
EX1.5
FOR BLUEBEAM LABELING/OCR:

0"
1"

FIRE ALARM GENERAL NOTES

1. FIRE ALARM SYSTEM: ADDRESSABLE, CLASS B, AUTOMATIC.
2. ALL WORK SHALL CONFORM TO THE 2022 EDITION OF NFPA 72, AND THE 2022 EDITION OF CBC, CEC, AND CFC.
3. INSTALLATION OF THE FIRE ALARM SYSTEM (FAS) SHALL NOT BE STARTED UNTIL DETAILED DESIGN DOCUMENTS AND SPECIFICATIONS, INCLUDING STATE FIRE MARSHAL LISTING NUMBERS FOR EACH COMPONENT OF THE SYSTEM HAS BEEN APPROVED BY DSA.
4. UPON COMPLETION OF THE INSTALLATION OF THE FIRE ALARM SYSTEM, A SATISFACTORY TEST OF THE ENTIRE SYSTEM SHALL BE MADE IN THE PRESENCE OF A DSA PROJECT INSPECTOR. (THE LOCAL FIRE AUTHORITY MAY WITNESS THE TEST).
5. A STAMPED SET OF APPROVED FIRE ALARM DESIGN DOCUMENTS SHALL BE ON THE JOB SITE AND USED FOR THE INSTALLATION.
6. ANY DISCREPANCIES BETWEEN THE DRAWINGS AND THE CODE OR RECOGNIZED STANDARDS SHALL BE BROUGHT TO THE ATTENTION OF DSA AND THE ARCHITECT/ENGINEER OF THE PROJECT.
7. DSA, ARCHITECT/ENGINEER AND OWNER SHALL BE NOTIFIED A MINIMUM OF 48 HOURS PRIOR TO THE FINAL INSPECTION AND/OR TESTING.
8. ALL PENETRATIONS THROUGH RATED ASSEMBLIES REQUIRING OPENING PROTECTION SHALL BE PROVIDED WITH A PENETRATION FIRE STOP SYSTEM AS IDENTIFIED IN CBC CHAPTER 7, UL, OR OTHER LAB TESTING CRITERIA. APPROVED TYPE OF MATERIALS SHALL BE IDENTIFIED WITHIN THE SPECIFICATION WITHIN THE FIRE ALARM SECTION.
9. MICROPHONE ASSOCIATED WITH EMERGENCY VOICE ALARM COMMUNICATION SYSTEMS (EVAC) SHALL BE ACCESSIBLE FOR USE, INSTALLED IN COMPLIANCE WITH CBC SECTIONS 11B-305 AND 11B-308.
10. WALL MOUNTED VISUAL NOTIFICATION DEVICES SHALL HAVE THEIR ENTIRE LENS WITHIN AT 80" MINIMUM AND 96" MAXIMUM FROM FINISHED FLOOR.
11. WALL MOUNTED AUDIBLE NOTIFICATION DEVICES SHALL HAVE THEIR TOPS MOUNTED AT 90" MINIMUM AND 100" MAXIMUM FROM FINISHED FLOOR AND NO CLOSER THAN 6" TO A HORIZONTAL STRUCTURE.
12. AUDIBLE DEVICES SHALL PROVIDE A SOUND PRESSURE LEVEL OF 15 DECIBELS (dBA) ABOVE THE AVERAGE AMBIENT SOUND LEVEL OR 5 dBA ABOVE THE MAXIMUM SOUND LEVEL HAVING A DURATION OF AT LEAST 60 SECONDS, WHICHEVER IS GREATER, IN EVERY SPACE WITHIN A BUILDING THAT MAY BE OCCUPIED AND BE INTELLIGIBLE.
13. AUDIBLE DEVICES SHALL BE SYNCHRONIZED TEMPORAL CODE 3 PATTERN, PRIOR TO "EVAC" ANNOUNCEMENT. THE CARBON MONOXIDE SIGNAL SHALL SOUND A FOUR-PULSE TEMPORAL PATTERN PER NFPA 72, 18.4.3.2.
14. THE CONTRACTOR SHALL ADJUST/INSTALL ALL DEVICES TO MAXIMIZE PERFORMANCE AND TO MINIMIZE FALSE ALARMS.
15. VISUAL DEVICES SHALL NOT EXCEED 2 FLASHES PER SECOND AND SHALL NOT BE SLOWER THAN 1 FLASH PER SECOND. THE DEVICE SHALL HAVE A PULSING LIGHT SOURCE NOT LESS THAN 15 CANDELA. VISUAL DEVICES WITHIN 55' FROM EACH OTHER SHALL BE SYNCHRONIZED.
16. UNDERGROUND AND EXTERIOR CONDUITS SHALL HAVE WATERTIGHT FITTINGS AND WIRE APPROVED FOR WET LOCATIONS.
17. ALL FIRE ALARM WIRING SHALL BE FLP OR FPLP (FIRE POWER LIMITED OR FIRE POWER LIMITED PLENUM) AS REQUIRED FOR APPLICATION. WIRING IN CONDUIT ABOVE GROUND MAY BE THHN OR THWN.
18. PER CEC STANDARDS, ALL WIRING SHALL BE PULLED THROUGH EACH JUNCTION BOX AND CONNECTED DIRECTLY TO EACH FIRE DEVICE. DO NOT SPLICE WIRE. ANY CONNECTION SHALL BE BY LUG CONNECTION AT A DEVICE OR AT A FATC TERMINAL BLOCK ONLY. ALL BOXES TO BE SIZED PER CEC.
19. SMOKE DETECTORS SHALL NOT BE CLOSER THAN 12" FROM FIRE SPRINKLERS NOR 36" FROM SUPPLY AIR DIFFUSERS. IN AREA OF CONSTRUCTION OR POSSIBLE DAMAGE/CONTAMINATION, NEWLY INSTALLED FIRE ALARM DEVICES SHALL BE COVERED UNTIL THAT AREA IS READY TO BE TURNED OVER TO THE OWNER.
20. ALL FIRE ALARM CIRCUITS SHALL BE IN CONDUIT, SURFACE RACEWAY, OR OPEN RUN ABOVE CEILINGS, UNDER FLOORS, AND IN WALLS IN A NEAT AND PROTECTED MANNER AS INDICATED ON DESIGN DOCUMENTS. EXPOSED CIRCUITS ARE ONLY PERMITTED WHEN NOTED AS EXPOSED ON DESIGN DOCUMENTS. OWNER STANDARDS MAY BE MORE STRINGENT.
21. FIRE ALARM PANEL, REMOTES, AND COMPONENTS SHALL BE SECURED TO MOUNTING SURFACES PER MANUFACTURERS' SPECIFICATIONS. ANY SINGLE DEVICE SHALL NOT EXCEED THE WEIGHT OF 20 LBS. WITHOUT SPECIAL MOUNTING DETAILS.
22. A DEDICATED BRANCH CIRCUIT SHALL BE PROVIDED FOR FIRE ALARM EQUIPMENT. THIS CIRCUIT SHALL BE ENERGIZED FROM THE COMMON USE AREA PANEL AND SHALL HAVE NO OTHER OUTLETS. THE BREAKER SHALL HAVE A LOCKING DEVICE WITH RED MARKING PER NFPA 72, SECTION 10.6.5.4 AND 10.6.5.2.3 TO BLOCK THE HANDLE IN THE "ON" POSITION. THE CIRCUIT BREAKER SHALL BE LABELED "FIRE ALARM CIRCUIT CONTROL". CIRCUIT ID TO BE LABELED AT THE FIRE PANEL/EXTENDERS.
23. THE INSTALLING CONTRACTOR SHALL PROVIDE A RECORD OF COMPLETION IN COMPLIANCE WITH NFPA 72, SECTION 7.5.6.
24. CONTROL PANELS AND REMOTE ANNUNCIATORS SHALL BE INSTALLED WITH THEIR BOTTOMS MOUNTED AT 48".
25. THE INSTALLING CONTRACTOR SHALL PROVIDE SYSTEM PROGRAMMING FOR SUPERVISORY MONITORING PER CBC 901.6.2.
26. SUPERVISORY MONITORING SHALL BE TESTED AND VERIFIED AS SENDING CORRECT SIGNALS IN CONJUNCTION WITH FINAL TEST. FIRE ALARM SYSTEMS SHALL TRANSMIT THE ALARM, SUPERVISORY AND TROUBLE SIGNALS TO AN APPROVED SUPERVISING STATION IN ACCORDANCE WITH NFPA 72. THE SUPERVISING STATIONS SHALL BE LISTED AS EITHER UUFX (CENTRAL STATION) OR UUJS (REMOTE AND PROPRIETARY) BY UNDERWRITERS LABORATORY (UL) OR SHALL COMPLY WITH THE REQUIREMENTS OF STANDARD FM 3011. A COPY OF ALL DEVICES REPORTED TO THE CENTRAL STATION SHALL BE PROVIDED TO THE OWNER'S ELECTRONICS DEPARTMENT.
27. OWNER SHALL BE RESPONSIBLE FOR ESTABLISHING A FIRE SYSTEM MONITORING CONTRACT OR PROVISIONS.
28. ALL WIRING IS SHOWN DIAGRAMMATICALLY. SUBJECT TO DSA APPROVAL, CONTRACTOR MAY VARY SEQUENCE OF CIRCUITRY; HOWEVER, ALL CIRCUITS SHALL BE CONTINUOUS AND SUPERVISED.
29. ALL CONNECTIONS SHALL BE PROPERLY LABELED BY CONDUCTOR AND SHALL HAVE STA-KON LUG CONNECTORS. PANDUIT TAG (TIE WRAP) SEPARATELY.
30. FIRE ALARM TERMINAL CABINETS SHALL HAVE SUFFICIENT SPACE, TERMINAL BOARDS AND SCREW TERMINAL CONNECTORS TO ALLOW CONNECTION OF ALL CONDUCTORS SHOWN. PROVIDE BARRIER TO SEPARATE FIRE ALARM SYSTEM WHEN TERMINAL CABINET IS SHARED WITH NON-FIRE ALARM SYSTEMS. CONTRACTOR SHALL BE REQUIRED TO SUBMIT WITH HIS OTHER SHOP DRAWINGS DETAILED DRAWINGS OF HIS PROPOSED CONNECTIONS AT EACH FIRE ALARM TERMINAL CABINET PRIOR TO COMMENCING ANY WORK.
31. ALL NAC CIRCUIT CONDUCTORS SHALL BE #12 AWG, STRANDED (19 STRANDS OR LESS) COPPER, UNLESS OTHERWISE NOTED.
32. SET END-OF-LINE RESISTORS IN DISTRIBUTION TERMINAL CABINETS.
33. BATTERIES SHALL BE STAMPED WITH DATE OF MANUFACTURE.
34. INSTALLATION OF FAS EQUIPMENT SHALL BE BY AN AUTHORIZED ENGINEERED SYSTEM DISTRIBUTOR FOR THE EQUIPMENT SPECIFIED BY THE MANUFACTURER FOR SALES, SERVICE, INSTALLATION AND MAINTENANCE. PROVIDE CERTIFICATIONS WITH EQUIPMENT SUBMITTALS. SUBMITTALS BY FIRMS NOT FULFILLING THIS REQUIREMENT WILL BE AUTOMATICALLY REJECTED.
35. THE FAS INSTALLER SHALL BE NICET LEVEL 2 CERTIFIED.
36. THE FAS INSTALLER SHALL PROVIDE ALL FACTORY WARRANTIES TO THE OWNER AT THE CLOSE UP OF THE PROJECT.
37. THE FAS INSTALLER SHALL PROVIDE WRITTEN CERTIFICATION USING NFPA 72 INSPECTION AND TESTING FORMS AND SHALL CERTIFY THAT THE INSTALLATION, TESTING, AND OPERATION CONFORM IN ALL RESPECTS TO THE REQUIREMENTS AS SET FORTH IN TITLE 19 OF THE CALIFORNIA CODE OF REGULATIONS AND PART 3, ARTICLE 760 OF TITLE 24 OF THE C.C.R. AND C.B.C. SECTION 907. THE CONTRACTOR SHALL SUBMIT THE COMPLETED FAS CERTIFICATION AND DESCRIPTION FORM TO DIVISION OF STATE ARCHITECT.
38. INCLUDE ALL DEMOLITION OF EXISTING FIRE ALARM SYSTEM WHETHER SPECIFICALLY SHOWN OR NOT. REMOVE ALL CABLING & UNUSED EXPOSED RACEWAY & OUTLETS. BLANK OFF ALL UNUSED WALL & HARD CEILING OUTLETS. REMOVE ALL UNUSED OUTLETS IN TEE-BAR CEILING & REPLACE ACOUSTIC TILES. RETURN ALL DEVICES, APPLIANCES, & CONTROL PANELS TO OWNER IF REQUESTED BY OWNER DURING CONSTRUCTION.
39. WHEN FIRE ALARM WORK WILL DISABLE PORTIONS OF THE EXISTING FAS, PROVIDE ALL REQUIRED OVERTIME AND FIRE WATCH IN SCOPE OF WORK.
40. WHERE FIRE ALARM DEVICES ARE BEING INSTALLED IN OTHERWISE INACCESSIBLE AREAS, PROVIDE AN ALLOWANCE FOR THE INSTALLATION OF ACCESS PANELS AND ALL WORK ASSOCIATED WITH THE INSTALLATION. THE CONTRACTOR SHALL CUT ALL THE OPENINGS. THE SIZE OF THE ACCESS PANEL SHALL BE DETERMINED BY THE MAN ACCESS REQUIREMENTS. PROVIDE PAINT GRADE ACCESS DOORS AND PAINT TO MATCH THE COLOR & SHEEN OF THE EXISTING CEILING.
41. FIRE ALARM SYSTEM INSPECTION, TESTING, AND MAINTENANCE SHALL COMPLY WITH NFPA 72, CHAPTER 14.
42. PROVIDE FIRE ALARM RECORD DOCUMENTS CABINET NFPA 72, 7.7.2

- EVERY NEW FIRE ALARM SYSTEM SHALL PROVIDE A DOCUMENTATION CABINET, INSTALLED AT THE SYSTEM CONTROL PANEL OR OTHER APPROVED LOCATION.
- THE DOCUMENTATION CABINET SHALL BE PROMINENTLY LABELED, "FIRE ALARM SYSTEM RECORD DOCUMENTS".
- ALL RECORD AND TESTING DOCUMENTATION SHALL BE STORED IN THE CABINET.
- CONTENTS SHALL BE ACCESSIBLE BY AUTHORIZED PERSONNEL ONLY.
- WHERE CABINET IS INSTALLED IN A LOCATION OTHER THAN THE SYSTEM CONTROL UNIT, ITS LOCATION SHALL BE IDENTIFIED AT THE SYSTEM CONTROL UNIT.

PROVIDE SYSTEM DOCUMENTS AS APPLICABLE:

- RECORD DRAWINGS/AS-BUILTS
- EQUIPMENT CUT SHEETS & CA SFM LISTINGS
- ALTERNATIVE MEANS AND METHODS
- PERFORMANCE BASED DESIGN DOCUMENTATION (NFPA 72, 7.3.7)
- SYSTEM RECORD OF COMPLETION & ANY SUPPLEMENTAL INSPECTION AND TESTING DOCUMENTATION (NFPA 72, 7.8.2)
- EMERGENCY RESPONSE PLAN (NFPA 72, 7.3.8)
- EVALUATION DOCUMENTATION (NFPA 72, 7.3.9)
- RISK ANALYSIS DOCUMENTATION (NFPA 72, 7.3.6)
- SOFTWARE & FIRMWARE CONTROL DOCUMENTATION (NFPA 72, 23.2.2)

FIRE ALARM CABLING INSTALLATION NOTES

1. FIRE ALARM CABLING SHALL BE INSTALLED IN A RACEWAY SYSTEM, EXCEPT AS NOTED BELOW.
2. IT SHALL BE ACCEPTABLE TO INSTALL FIRE ALARM CABLING FOR SLC, NAC, EV/AC, AND FA NETWORK OPEN AIR IN ATTIC SPACES ABOVE T-BAR CEILINGS. FIRE ALARM CABLING SHALL BE INSTALLED ON DEDICATED J-HOOKS, SEPARATE FROM OTHER SYSTEMS, PER DETAIL M13/X/E401.
3. WHEREVER A HARD LID CEILING SYSTEM IS PRESENT, THE FIRE ALARM CABLING SHALL BE INSTALLED IN CONDUIT IN THE ATTIC SPACE ABOVE THE CEILING.
4. FA FIBER OPTIC NETWORK CABLING SHALL BE RUN DIRECTLY FROM FCP NODE TO FCP NODE (NOT PATCHED IN FROM MDF/IDF) IN A STYLE 7 CONFIGURATION WITH ARMORED, 6-STR SINGLEMODE FIBER OPTIC CABLE. PROVIDE A 1 1/2" CONDUIT STUB FROM THE TOP OF EACH CONTROL PANEL TO THE HORIZONTAL LADDER RACK ABOVE FOR BRINGING THE FO CABLE INTO THE CABINET. TERMINATE ALL STRANDS SUCH THAT THEY ARE READY TO USE.

FIRE ALARM SYMBOLS

SYMBOL	NAME	DESCRIPTION	CSFM
FACP	(E) FIRE ALARM CONTROL PANEL W/ (E) PAGING MICROPHONE INTERFACE & (E) NETWORK CARD	(E) EST #EST3X (E) EST #3X-PMI (E) EST #3X-FIB	7165-1657:0306
FACP-X & AMP-X	FIRE ALARM CONTROL PANEL INTELLIGENT AUDIO AMPLIFIER FIBER OPTIC NETWORK MODULE	EST #EST3X EST #3-ZA40B EST #3X-FIB	7165-1657:0306
	SMOKE DETECTOR, PHOTOELECTRIC DETECTOR BASE	EST #SIGA-OSD EST #SIGA-SB	7272-1657:0511 7300-1657:0120
	ATTIC HEAT DETECTOR, 194°F W/ MONITOR MODULE	SYSTEM SENSOR #5604 EST #SIGA-MM1	7270-1653:0167 7300-1657:0121
	RELAY MODULE	EST #SIGA-CR	7300-1657:0121
	SPEAKER/VISIBLE NAC DEVICE, CEILING MOUNTED	EATON/WHEELOCK #ELSPSTRC	7320-1657:0516
	EXTERIOR SPEAKER, W.P., WALL MT'D	EATON/WHEELOCK #ET-1010-R	7320-0785:0105

FIRE ALARM CABLE SCHEDULE

SYMBOL	NAME	DESCRIPTION
A	SIGNALING LINE CIRCUIT (SLC) CABLE WEST PENN #D990	16/2 TWISTED PAIR, STRANDED, LOW CAPACITANCE FA POWER LIMITED, RISER CABLE (FPLR)
AW	SIGNALING LINE CIRCUIT (SLC) CABLE, OSP WEST PENN #AQC225	16/2 TWISTED PAIR, STRANDED, AQUASEAL FA POWER LIMITED CABLE (FPL)
B	NOTIFICATION APPLIANCE CKT (NAC) CABLE WEST PENN #998S	12/2 TWISTED PAIR, STRANDED FA POWER LIMITED, RISER CABLE (FPLR)
BW	NOTIFICATION APPLIANCE CKT (NAC) CABLE, OSP WEST PENN #AQ227	12/2 TWISTED PAIR, STRANDED, AQUASEAL FA POWER LIMITED CABLE (FPL)
C	EM. VOICE/ALARM COMM. (EV/AC) CABLE WEST PENN #HF995	18/2 SHIELDED TWISTED PAIR, STRANDED FA POWER LIMITED CABLE (FPL)
CW	EM. VOICE/ALARM COMM. (EV/AC) CABLE, OSP WEST PENN #AQC295	16/2 SHIELDED TWISTED PAIR, STRANDED, AQUASEAL FA POWER LIMITED CABLE (FPL)
D	INITIATING DEVICE CIRCUIT (IDC) CABLE WEST PENN #994S	14/2 TWISTED PAIR, STRANDED FA POWER LIMITED, RISER CABLE (FPLR)
DW	INITIATING DEVICE CKT (IDC) CABLE, OSP WEST PENN #AQC226	14/2 TWISTED PAIR, STRANDED, AQUASEAL FA POWER LIMITED CABLE (FPL)
F	NETWORK COMM CABLE	ARMORED, 6-STR SM ISP FIBER OPTIC CABLE
FW	SITE NETWORK COMM CABLE	ARMORED, 6-STR SM OSP FIBER OPTIC CABLE
G	POWER CABLE WEST PENN #998S	12/2 TWISTED PAIR, STRANDED FA POWER LIMITED, RISER CABLE (FPLR)

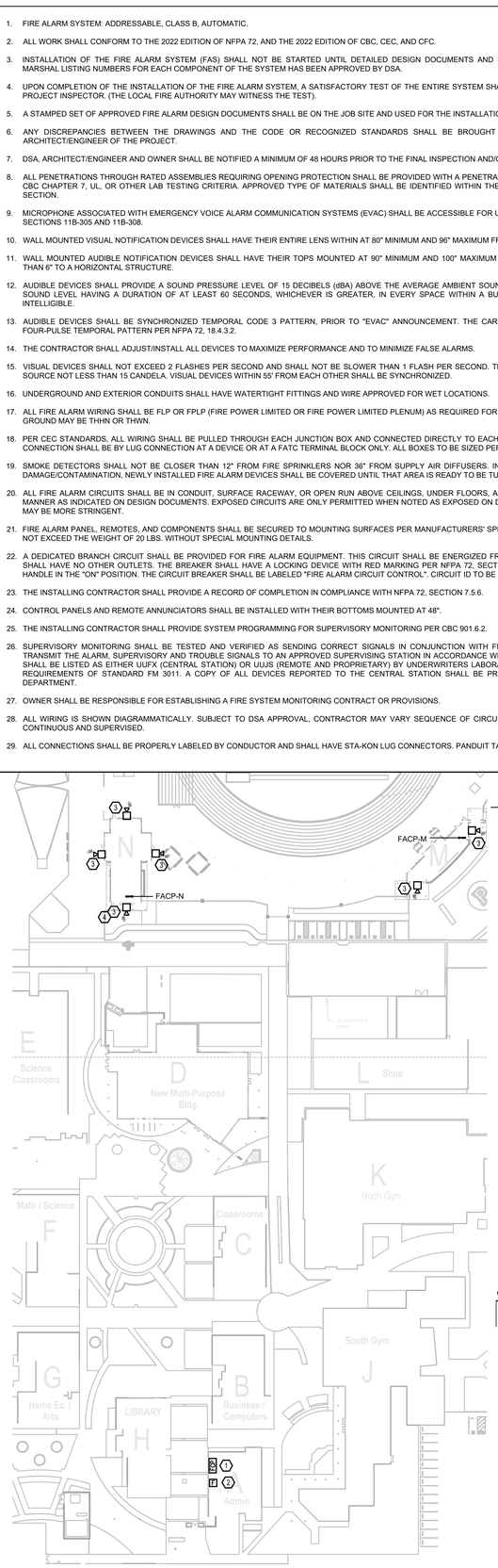

KEYNOTES

1. APPROXIMATE LOCATION OF (E) EST3X FIRE ALARM CONTROL PANEL W/ MICROPHONE.
2. APPROXIMATE LOCATION OF (E) PULL STATION LOCATED IN ADMIN BUILDING.
3. LOCATION OF NEW EXTERIOR SPEAKERS FOR PATH OF EGRESS.
4. LOCATED ON SOUTH FACE OF BUILDING N ON EXTERIOR OF ELECTRICAL ROOM.

VOLTAGE DROP CALCULATION

NAC Circuit 'nM'

VD = Voltage Drop [V]
I = Current [A] (0.17A)
K = 12.9 (Copper Constant)
L = Distance to Load [ft.] (242')
CM = Circular Mils (#12 AWG = 6530)
V = Voltage [V] (24VDC)

$VD = \frac{K * I * 2L}{CM} = \frac{12.9 * 0.17 * 2 * 242'}{6530} = 0.163\ V$

$VD\% = \frac{VD}{24} = 0.7\%$

VOLTAGE DROP CALCULATION

NAC Circuit 'nN'

VD = Voltage Drop [V]
I = Current [A] (0.306A)
K = 12.9 (Copper Constant)
L = Distance to Load [ft.] (297')
CM = Circular Mils (#12 AWG = 6530)
V = Voltage [V] (24VDC)

$VD = \frac{K * I * 2L}{CM} = \frac{12.9 * 0.306 * 2 * 297}{6530} = 0.359\ V$

$VD\% = \frac{VD}{24} = 1.5\%$

VOICE EVACUATION VOLTAGE DROP

Volt Drop Common Parameters

Volts 70.7 Volts
Wire Size 18 AWG
Wire Resistance 8.45 ohm/kft

	INDOOR Wattage Tap						OUTDOOR Wattage Tap					CIRCUIT LENGTH		
Type Wattage Tap	1/8 W	1/4 W	1/2W	1W	2W	4W	1/4W	1/2W	1W	2W	4W	8W	Total Watts	Max Length	Actual Length
aM	6								2				4.75	7379	242
aN	7	1							3				7.125	4919	297

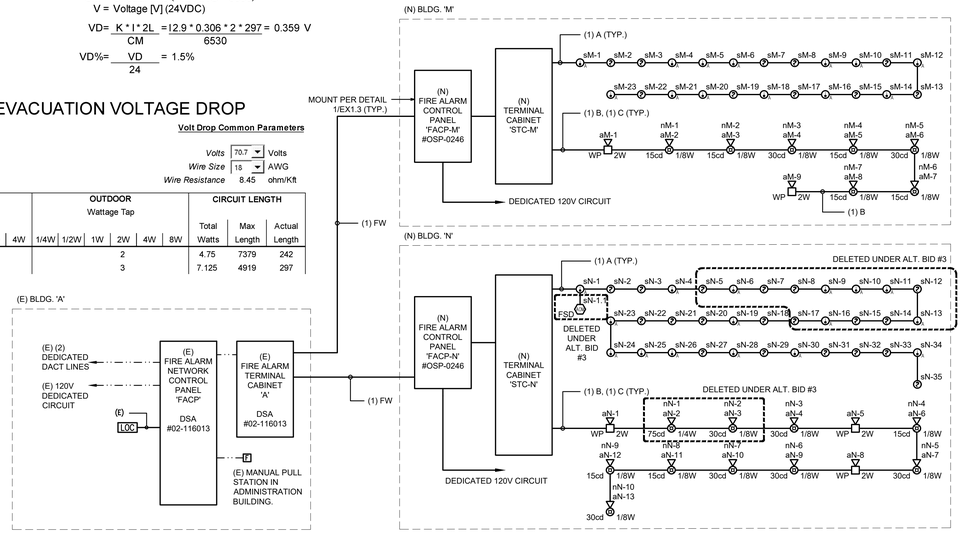

BATTERY CALCULATION

F.A. Control Panel 'M'

POWER REQUIREMENTS

	CURRENT [A] SUPERVISORY	ALARM
(1) SFS1-CPU (Main Board)	0.1150	0.1150
(1) 4X-LCD (Panel Display)	0.0550	0.0660
(1) PS10-4B (Power Supply)	0.0880	0.1690
(1) 3X-FIB8 W/ SMXLO2 (Network Card)	0.0980	0.0980
(1) 3-ZA40A (Amplifier)	0.0062	2.4800
NAC Circuits	-	0.1700
TOTALS	0.3622	3.0980

BATTERY CAPACITY

SUPERVISORY POWER (24 HOURS)	= 24 Hr * 0.3622A	=	8.693 AHr
ALARM POWER (15 MINUTES)	= 0.25 Hr * 3.098A	=	0.775 AHr
	TOTAL POWER REQUIREMENT	=	9.467 AHr
	MINIMUM BATTERY CAPACITY (includes 25% safety factor)	=	12 AHr

BATTERY CALCULATION

F.A. Control Panel 'N'

POWER REQUIREMENTS

	CURRENT [A] SUPERVISORY	ALARM
(1) SFS1-CPU (Main Board)	0.1150	0.1150
(1) 4X-LCD (Panel Display)	0.0550	0.0660
(1) PS10-4B (Power Supply)	0.0880	0.1690
(1) 3X-FIB8 W/ SMXLO2 (Network Card)	0.0980	0.0980
(1) 3-ZA40A (Amplifier)	0.0062	2.4800
NAC Circuits	-	0.3060
TOTALS	0.3622	3.2340

BATTERY CAPACITY

SUPERVISORY POWER (24 HOURS)	= 24 Hr * 0.3622A	=	8.693 AHr
ALARM POWER (15 MINUTES)	= 0.25 Hr * 3.234A	=	0.809 AHr
	TOTAL POWER REQUIREMENT	=	9.501 AHr
	MINIMUM BATTERY CAPACITY (includes 25% safety factor)	=	12 AHr

ACTION \ INITIATION CONDITION	FIRE SPRINKLER TAMPER SWITCH, POST INDICATOR VALVE	SMOKE, HEAT, OR DUCT DETECTOR, FIRE SPRINKLER FLOW SWITCH	POWER LOSS, SHORT CIRCUIT, GROUND FAULT
ANNUNCIATE TROUBLE			●
ANNUNCIATE ALARM		●	
ANNUNCIATE SUPERVISORY	●		
INITIATE VISUAL NOTIFICATION APPLICANCES		●	
INITIATE EV/AC SPEAKER APPLICANCES		●	
TRANSMIT TO CENTRAL STATION	●	●	●
ACCESS CONTROL OVERRIDE		●	

1 FIRE ALARM SITE REFERENCE PLAN
SCALE: 1" = 60'-0"

2 FIRE ALARM SINGLE LINE DIAGRAM
SCALE: 1" = 50'-0"

3 FIRE ALARM SEQUENCE OF OPERATIONS MATRIX
SCALE: NO SCALE

AUDIBLE DEVICES: WHERE CEILING HEIGHTS PERMIT WALL-MOUNTED APPLIANCES SHALL HAVE THEIR TOPS AT HEIGHTS ABOVE FINISHED FLOORS OF NOT LESS THAN 90" (2.30 M) AND BELOW THE FINISHED CEILINGS OF NOT LESS THAN 6" (0.15m).

AUDIO/VISUAL & VISUAL-ONLY DEVICES WALL MOUNTED APPLIANCES SHALL HAVE THEIR BOTTOMS AT HEIGHTS ABOVE THE FINISHED FLOOR OF NOT LESS THAN 80" (2m), AND TOPS NO GREATER THAN 96" (2.4m).

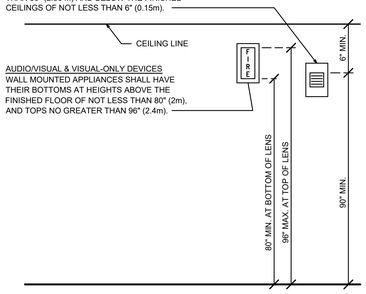

4 FIRE ALARM WALL MOUNTED DEVICES ELEVATION
SCALE: NO SCALE

PARLIER HS STADIUM REPLACEMENT
603 3rd Street
Parlier, CA 93648

CLIENT PROJECT NO: 250093
DSA SUBMISSION
DSA APPL. NO.: 02:124002 DSA FILE NO.: 10-H12

PBK
FRESNO, CA
559-448-8400
www.pbk.com

PARLIER UNIFIED SCHOOL DISTRICT

REGISTERED PROFESSIONAL ENGINEER R.J. HARDIN No. 9125 ELECTRICAL STATE OF CALIFORNIA

CLIENT: PARLIER UNIFIED SCHOOL DISTRICT
DATE: YYYY/MM/DD
PROJECT NUMBER: 250093

DRAWING HISTORY

No.	Description	Date
1	RFI #003	06/03/2026
2	ADDENDUM #3	06/08/2026
3	ADDENDUM #4	06/12/2026

CHECKED BY: HDE
DRAWN BY: HDE

FIRE ALARM INFORMATION

EX1.5

Plot Stamp:
6/22/2026 9:21:06 AM

SOLAR INFORMATION
EX2.0
FOR BLUEBEAM LABELING/OCR:

0"
1"

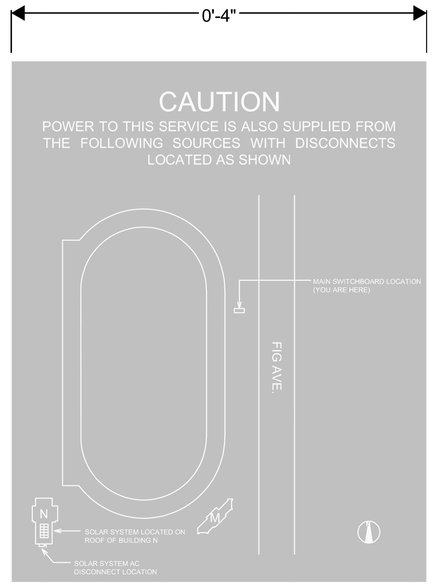

PROVIDE A MAP SIMILAR TO THE ONE SHOWN ABOVE ADJACENT TO THE MAIN SWITCHBOARD MAIN CIRCUIT BREAKER.

1 DISCONNECTING MEANS MAP
SCALE: NO SCALE

LABEL COMPLYING WITH CEC 705.12(B)(3) SHALL BE PROVIDED ON INTERIOR OF MAIN PANEL. THE LABEL SHALL COMPLY WITH THE REQUIREMENTS OF CEC 110.21(B) AND BE SIMILAR TO THE FOLLOWING:

⚠WARNING
THIS EQUIPMENT FED BY MULTIPLE SOURCES. TOTAL RATING OF ALL OVERCURRENT DEVICES, EXCLUDING MAIN SUPPLY OVERCURRENT DEVICE, SHALL NOT EXCEED AMPACITY OF BUSBAR.

LABEL COMPLYING WITH CEC 690.13(B) SHALL BE PROVIDED ON AC DISCONNECT. THE LABEL SHALL COMPLY WITH THE REQUIREMENTS OF CEC 110.21(B) AND BE SIMILAR TO THE FOLLOWING:

AC DISCONNECT
PHOTOVOLTAIC SYSTEM POWER SOURCE
RATED AC OUTPUT CURRENT 6.5 AMPS
NOMINAL OPERATING AC VOLTAGE 480 VOLTS

LABEL COMPLYING WITH CFC 1205.4.1 & CEC 690.56(C) SHALL BE PROVIDED ON THE EXTERIOR OF THE MAIN SERVICE PANEL. THE FIRST THREE LINES OF THE LABEL SHALL BE UPPERCASE LETTERS WITH A MINIMUM HEIGHT OF 3/8" IN BLACK ON A YELLOW BACKGROUND. THE REMAINING CHARACTERS SHALL BE UPPERCASE WITH A MINIMUM HEIGHT OF 3/16 INCH IN BLACK ON A WHITE BACKGROUND AND BE SIMILAR TO THE FOLLOWING:

SOLAR PV SYSTEM EQUIPPED WITH RAPID SHUTDOWN
TURN RAPID SHUTDOWN SWITCH TO THE "OFF" POSITION TO SHUT DOWN PV SYSTEM AND REDUCE SHOCK HAZARD IN THE ARRAY

LABEL COMPLYING WITH CEC 690.15(B) SHALL BE PROVIDED ON INTERIOR OF MAIN PANEL. THE LABEL SHALL COMPLY WITH THE REQUIREMENTS OF CEC 110.21(B) AND BE SIMILAR TO THE FOLLOWING:

⚠WARNING
DO NOT DISCONNECT UNDER LOAD

LABEL COMPLYING WITH CEC 690.13(B) SHALL BE PROVIDED ON EXTERIOR OF MAIN PANEL & AC DISCONNECT. THE LABEL SHALL COMPLY WITH THE REQUIREMENTS OF CEC 110.21(B) AND BE SIMILAR TO THE FOLLOWING:

⚠WARNING
ELECTRIC SHOCK HAZARD
TERMINALS ON THE LINE AND LOAD SIDES MAY BE ENERGIZED IN THE OPEN POSITION

LABEL COMPLYING WITH CEC 690.4(B) SHALL BE PROVIDED ON INTERIOR OF MAIN PANEL AT PV BREAKER. THE LABEL SHALL COMPLY WITH THE REQUIREMENTS OF CEC 110.21(B) AND BE SIMILAR TO THE FOLLOWING:

PHOTOVOLTAIC
SOLAR BREAKER

LABEL COMPLYING WITH CEC 705.10(3) SHALL BE PROVIDED ON EXTERIOR OF MAIN PANEL. THE LABEL SHALL COMPLY WITH THE REQUIREMENTS OF CEC 110.21(B) AND BE SIMILAR TO THE FOLLOWING:

⚠CAUTION
MULTIPLE SOURCES OF POWER

2 SOLAR LABELS
SCALE: NO SCALE

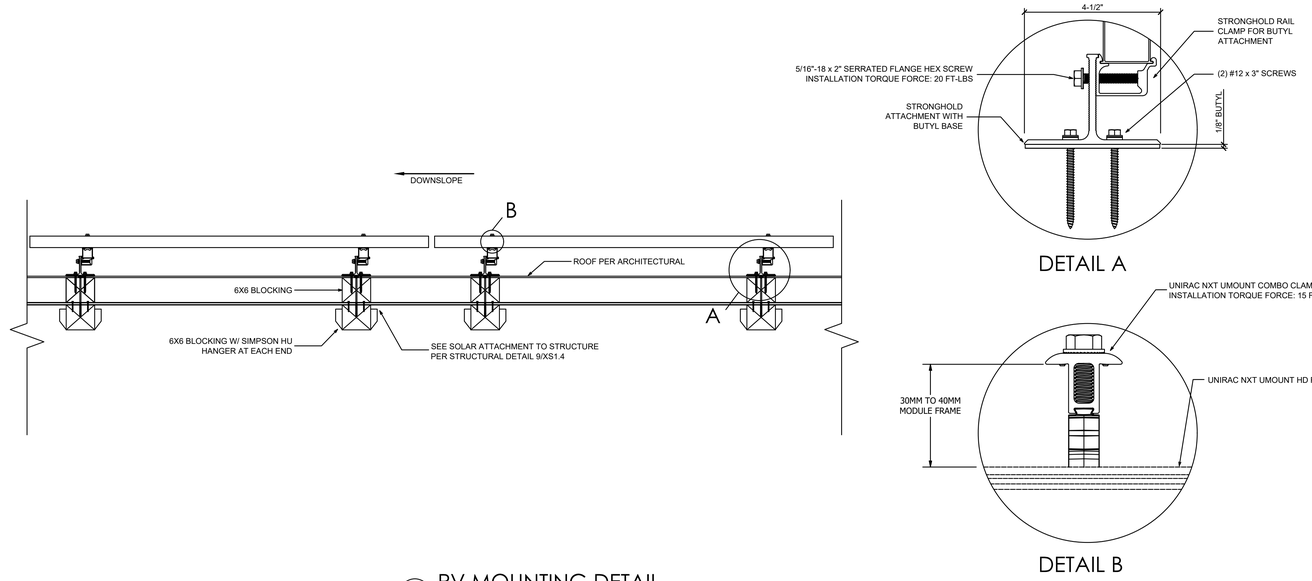

DETAIL A

DETAIL B

3 PV MOUNTING DETAIL
SCALE: NO SCALE

BLDG N CZ 13 PHOTOVOLTAIC SYSTEM SIZE CALCULATION		
Equation 140.10-A		
kWPV	5.2	kWdc size of the PV system (CFA x A)/1000
CFA	3218.0	Conditioned Floor Area (s.f.)
A	1.63	Capacity Factor from Table 140.10-A
Equation SARA		
kWPV	45.1	kWdc size of the PV system (SARA x 14W/ft2)
SARA	3218.0	Solar Access Roof Area (s.f.)
kWPV	5.2	The smaller of Equation 140.10-A or SARA
kWPV	**6.1**	Size of the PV System Provided if kWPV > 4.0

BESS NOT REQUIRED PER CEC EXCEPTION 3 TO SECTION 140.10(B)

PV WIRE SIZE CALCULATION
PV Isc = 13.68A
BIFACIAL GAIN: 13.68 * 1.20 = 16.42A
A = 16.42 * 1.56 = 25.61A
40.0A > 25.61A
#10 AWG CONDUCTOR IS ALLOWABLE PER CEC 110.14(C)(1)(a)(3)

AC WIRE SIZE CALCULATION

MAX OUTPUT CURRENT: 6.5A
A = 6.5 * 1.25 = 8.1A
#10 AWG CONDUCTOR IS ALLOWABLE

4 SOLAR CALCULATIONS
SCALE: NO SCALE

EXCLUDED IN ALT. BID

Plot Stamp:
6/22/2026 9:21:06 AM

PBK
www.pbk.com
559-448-8400
FRESNO, CA

PARLIER HS STADIUM REPLACEMENT
603 3rd Street
Parlier, CA 93648

CLIENT PROJECT NO: 250093
DSA SUBMISSION
DSA APPL. NO.: 02-124002 DSA FILE NO.: 10-H12

PARLIER UNIFIED SCHOOL DISTRICT

REGISTERED PROFESSIONAL ENGINEER R.J. HARDIN NO. 9125 ELECTRICAL STATE OF CALIFORNIA

CLIENT	
PARLIER UNIFIED SCHOOL DISTRICT	
DATE YYYY/MM/DD	PROJECT NUMBER 250093

DRAWING HISTORY

No.	Description	Date
3	RFI #003	06/03/2026
4	ADDENDUM #3	06/09/2026
5	ADDENDUM #4	06/12/2026

CHECKED BY: HDE
DRAWN BY: HDE

SOLAR INFORMATION

EX2.0

SOLAR INFORMATION
EX2.1
FOR BLUEBEAM LABELING/OCR:

0"
1"

YOTTA ENERGY

DPI-208 & DPI-480
3-Phase Microinverters

Yotta's **Dual Power Inverters (DPI-208 and DPI-480)** are native 3-phase microinverters that each support **four high capacity solar modules** and deliver outstanding **performance**. The internals are protected with silicone to **reduce stress** on the electronics, increase its **waterproof** properties, **dissipate heat,** and to provide **maximum system reliability**. Yotta's DPI-208 and DPI-480 are powerful **plug-and-play** MLPE inverters that install faster than any other solution in the market and comply with **rapid shutdown requirements**. Their design improves **thermal dissipation** while maximizing **power production**.

- **DPI** (Dual Power Inverter) designed to work with PV or Yotta's **SolarLEAF** energy storage technology
- **Native 3-phase power output (208V or 480V)**
- **Low Voltage** DC input (<60V)
- **4 Solar Module Input Channels, 2 MPPT's**
- **Continuous** rated AC output power **1728VA @208V** and **1800VA @480V**
- **Engineered** for high-capacity PV modules
- **Maximum** input current 20A
- Integrated **Safety Protection Relay**
- **Rapid Shutdown Compliant**
- **Adjustable Power Factor**



3 PHASE GRID
208 OR 480V OUTPUT VOLTAGE
PLUG & PLAY & STORAGE READY
RAPID SHUTDOWN COMPLIANT
SAFETY PROTECTION RELAY
ADJUSTABLE POWER FACTOR
ADVANCED HEAT DISSIPATION TECHNOLOGY
REMOTE DIAGNOSIS

Yotta Vision Monitoring

- **Monitors** and **Analyzes** each solar module and microinverter
- Allows **Remote Access** to the solar array
- Displays **Performance Issues** and **Alerts** the user to events
- **Real Time Communication**
- **Graphs** system solar output over time to boost troubleshooting



Ver. 5.5
July 2023

✉: INFO@RENEWABLENERGYS.COM
🖳: https://renewable-energysolutions.com/
☎: 818-281-1274

RENEWABLE ENERGY SOLUTIONS

DPI-208 & DPI-480 3-Phase Microinverter Data Sheet

MODEL	DPI-208	DPI-480
INPUT DATA (DC)		
Peak Power Tracking Voltage	32V-45V	
Operating Voltage Range	26V-60V	
Maximum Input Voltage	60V	
Maximum Input Current	20A x 4	
Maximum Input Short Circuit Current	25A per input	
OUTPUT DATA (AC)		
Maximum Continuous Output Power	1728VA	1800VA
Nominal Output Voltage/Range [1]	208V/183V-229V	480V/422V-528V
Adjustable Output Voltage Range	166V-240V	385V-552V
Nominal Output Current	4.8Ax3	2.17Ax3
Maximum Output Fault Current (AC) and Duration	L-L:85.4Apk, 13.6ms of duration, 4.967Arms	L-L:35.1Apk, 13.9ms of duration, 2.199Arms
Grid Connections	208V 3-Phase (208Y/120V, 240 Delta)	480V 3-Phase (480Y/277V, 480 Delta)
Nominal Output Frequency/Range [1]	60Hz/59.3Hz-60.5Hz	
Adjustable Output Frequency Range	55Hz-65Hz	
Power Factor	0.99/0.8 leading...0.8 lagging	
Maximum Units per 30A branch [2]	5	11
AC Bus Cable	AWG 10	
EFFICIENCY		
Peak Efficiency	96.5%	
Nominal MPPT Efficiency	99.5%	
Night Power Consumption	40mW	
MECHANICAL DATA		
Operating Ambient Temperature Range [3]	-40°F to +149°F(-40°C to +65°C)	
Storage Temperature Range	-40°F to +185°F(-40°C to +85°C)	
Dimensions (W x H x D)	14" × 9.5" × 1.8" (359mm X 242mm X 46mm)	
Weight	13 lbs (6kg)	
DC Connector Type	Stäubli MC4 PV-ADBP4-S2&ADSP4-S2	
Cooling	Natural Convection - No Fans	
Enclosure Environmental Rating	Type 6	
FEATURES		
Communication (Inverter To ECU) [4]	Encrypted ZigBee	
Isolation Design	High Frequency Transformers, Galvanically Isolated	
Energy Management	Yotta EMA (Web and App)	
Warranty	10 Years Standard ; 25 Years Optional	
CERTIFICATE & COMPLIANCE		
Safety, EMC & Grid Compliances	UL-1741; CA Rule 21 (UL 1741 SA and UL 1741 SB); CSA C22.2 No. 107.1-16; HECO RULE 14H AND RULE 22; FCC Part 15; ANSI C63.4; ICES-003; IEEE1547; NEC2014 & NEC2017 Section 690.11 DC Arc-Fault circuit; Protection NEC2014 & NEC2017 & NEC2020 Section 690.12 Rapid Shutdown of PV systems on Building	

Meets the standard requirements for Distributed Energy Resources (UL-1741) and identified with the CSA Listed Mark

(1) Nominal voltage/frequency range can be extended beyond nominal if required by the utility.
(2) Limits may vary. Refer to local requirements to define the number of microinverters per branch in your area.
(3) Operating ambient temperature range can be extended to -40°F to +185°F (-40°C to +85°C) with power derating.
(4) Recommend no more than 80 inverters register to one ECU for stable communication.

www.yottaenergy.com

✉: INFO@RENEWABLENERGYS.COM
🖳: https://renewable-energysolutions.com/
☎: 818-281-1274

RENEWABLE ENERGY SOLUTIONS

YOTTA ENERGY

ECU-R
Energy Communication Unit

Yotta's **Energy Communication Unit (ECU-R)** is the information gateway for our **DPI Microinverters**. The ECU-R collects module **performance data** from each individual microinverter and transfers the information to an Internet database in **real time**. Through the **Yotta Energy Monitoring and Analysis (EMA)** software, the ECU-R gives you precise **analysis** of each DPI Microinverter and PV module in your solar **installation**. The user-friendly **interface** gives you access to your solar array performance in seconds from our **web based portal** or from our **APP** (Android/iOS).

MLPE TECHNOLOGY COMPATIBLE
ZigBee 2.4GHz
USER FRIENDLY INTERFACE
EMA APP ANDROID/IOS
DATA PERFORMANCE
REMOTE DIAGNOSIS



MODEL	ECU-R
COMMUNICATION TO INVERTER	
Communication	ZigBee 2.4 Ghz
Max. Communicating Inverters*	90
COMMUNICATIIN TO EMA	
Ethernet	10/100M Auto-Sensing, Auto-negotiation
Wireless	Wi-Fi 802.11g / n & Cellular (Optional)
Wireless Security	WEP, WPA2-PSK
USB Interface	5Vdc - 0.6A Output
POWER DATA	
Power Supply	5V, 2A
Power Consumption	1.7 W
PRODUCT SPECIFICATIONS	
Frequency Range	2412 MHz - 2472 MHz (Wi-Fi) 2405 MHz - 2480 MHz (ZigBee)
RF Output Power (EIRP)	16.56 dBm (Wi-Fi) - 9.50 dBm (ZigBee)
Type of Antenna	External antenna (SMA type connector)
MECHANICAL DATA	
Dimensions (W x H x D)	4.8 x 3.4" x 0.98" (122 mm x 87 mm x 25 mm)
Weight	0.33 lbs (150 g)
Operating Temperature Range	-20°C to +65°C (-4°F to +149°F)
Cooling	Natural Convection (No Fans)
Enclosure Rating	Indoor - NEMA1 (IP20)

*Maximum number of DPI Microinverters per ECU-R may vary depending on the PV array size and layout, maximum distance between ECU-R and DPI Microinverters in the array, obstacles (thick concrete wall, metallic roof top).

- **Collection** and **transmission** of DPI Microinverter data
- **Real time** monitoring
- **Stable** wireless encrypted **ZigBee communication** with microinverters and built-in **WiFi**
- **Small** and portable size
- **Low energy consumption**
- **Flexible** installation
- **Plug and play**
- **3-year** Warranty

Ver. 1.0
April 2023

www.yottaenergy.com

✉: INFO@RENEWABLENERGYS.COM
🖳: https://renewable-energysolutions.com/
☎: 818-281-1274

RENEWABLE ENERGY SOLUTIONS

1 YOTTA DPI-480 MICROINVERTER DATASHEET
SCALE: NO SCALE

2 YOTTA ECU-R DATASHEET
SCALE: NO SCALE

CSA GROUP

Certificate of Compliance

Certificate: 80140774 **Master Contract:** 604517
Project: 80165140 **Date Issued:** 2023-04-06

Issued to: Yotta Energy, Inc
2101 E St. Elmo, Suite 150
Austin, Texas 78744
UNITED STATES
Attention: Bernard Grant

The products listed below are eligible to bear the CSA Mark shown with adjacent indicators 'C' and 'US' for Canada and US or with adjacent indicator 'US' for US only or without either indicator for Canada only

C US

Issued by: Magic Zhang
Magic Zhang

PRODUCTS

CLASS - C531109 - POWER SUPPLIES - Distributed Generation Power Systems Equipment
CLASS - C531189 - POWER SUPPLIES - Distributed Generation-Power Systems Equipment - Certified to U.S. Standards

Grid Support Utility Interactive Microinverter, Models DPI-208 and DPI-480, rack mounted.

For details related to rating, size, configuration, etc., reference should be made to the CSA Certification Record, Certificate of Compliance, Annex A, or the Descriptive Report.

APPLICABLE REQUIREMENTS

CSA-C22.2 No.107.1-16 - Power Conversion Equipment
*UL Std No. 1741-Third Edition - Inverters, Converters, Controllers and Interconnection System Equipment for Use With Distributed Energy Resources (Third Edition, Dated September 28, 2021)

DQD 507 Rev. 2019-04-30 © 2018 CSA Group. All rights reserved. Page 1

CSA GROUP

Certificate: 80140774 **Master Contract:** 604517
Project: 80165140 **Date Issued:** 2023-04-06

*Note: Conformity to UL 1741(Third Edition, Dated September 28, 2021) includes compliance with applicable requirements of IEEE 1547-2003 (R2008), IEEE 1547.1-2005(R2011), IEEE 1547-2018, IEEE1547.1-2020, IEEE 1547a-2020. Grid support function is verified according to UL 1741 Supplement SA8-SA18 with the SRDs of California Electric Rule 21, and also verified according to UL 1741 Supplement SB and IEEE 1547.1-2020 with the SRDs of IEEE 1547-2018, IEEE 1547a-2020 and Hawaiian Electric Co. SRD-V2.0. While the grid support function evaluated according to IEEE 1547.1-2020, the interoperability is verified with IEEE 2030.5-2018 communication protocol.

*Note: This product is PV Rapid Shut Down Equipment and conforms with NEC-2014, NEC-2017 and NEC-2020 Article 690.12 and CEC-2018, CEC-2021 Sec 64-218 Rapid Shutdown of PV Systems, for AC and DC conductors, when installed according manufacturer's instructions.

Notes:

Products certified under Class C531109 have been certified under CSA's ISO/IEC 17065 accreditation with the Standards Council of Canada (SCC). www.scc.ca

DQD 507 Rev. 2019-04-30 © 2018 CSA Group. All rights reserved. Page 2

CSA GROUP

Supplement to Certificate of Compliance

Certificate: 80140774 **Master Contract:** 604517

The products listed, including the latest revision described below, are eligible to be marked in accordance with the referenced Certificate.

Product Certification History

Project	Date	Description
80165140	2023-04-06	Update report 80140774 to evaluate the Grid support function to comply with UL 1741 Supplement SB according to IEEE 1547.1-2020 with SRDS IEEE 1547-2018, IEEE 1547a-2020 and SRD V2.0 requirements for all models, firmware number is V3.
80140774	2022-09-22	Multiple Listing for Yotta Energy, Inc.(C/US)

Original Certification	Model No.	Listee Model No.
	(ALTENERGY POWER SYSTEM INC.)	(Yotta Energy, Inc)
80127107	QT2-208	DPI-208
	QT2-480	DPI-480

DQD 507 Rev. 2019-04-30 © 2018 CSA Group. All rights reserved. Page 1

3 YOTTA DPI-480 MICROINVERTER UL 1741 LISTING
SCALE: NO SCALE

EXCLUDED IN ALT. BID

Plot Stamp:
6/22/2026 9:21:06 AM

PBK
www.pbk.com
559-448-8400
FRESNO, CA

PARLIER HS STADIUM REPLACEMENT
603 3rd Street
Parlier, CA 93648

CLIENT PROJECT NO. 250093
DSA SUBMISSION DSA FILE NO. : 10-H12
DSA APPL. NO. : 02-124002

PARLIER UNIFIED SCHOOL DISTRICT

REGISTERED PROFESSIONAL ENGINEER R.J. HARDIN No. 9125 ELECTRICAL STATE OF CALIFORNIA

CLIENT	
PARLIER UNIFIED SCHOOL DISTRICT	
DATE: YYYY/MM/DD	PROJECT NUMBER: 250093

DRAWING HISTORY

No.	Description	Date
1	RFI #003	06/03/2026
2	ADDENDUM #3	06/08/2026
3	ADDENDUM #4	06/12/2026

CHECKED BY: HDE
DRAWN BY: HDE

SOLAR INFORMATION

EX2.1

SOLAR INFORMATION
EX2.2
FOR BLUEBEAM LABELING/OCR:

0"
1"



TOPBiHiKu6

N-type Bifacial TOPCon Technology

575 W ~ 600 W

CS6W-575|580|585|590|595|600TB-AG

MORE POWER

- Module power up to 600 W
  Module efficiency up to 23.2 %
- Up to 85% Power Bifaciality,
  more power from the back side
- Excellent anti-LeTID & anti-PID performance,
  Low power degradation, high energy yield
- Lower temperature coefficient (Pmax): -0.29%/°C,
  increases energy yield in hot climate
- Lower LCOE & system cost

MORE RELIABLE

- Tested up to ice ball of 35 mm diameter
  according to IEC 61215 standard
- Minimizes micro-crack impacts
- Heavy snow load up to 5400 Pa,
  wind load up to 2400 Pa*

* For detailed information, please refer to the Installation Manual.

CSI Solar Co., Ltd.
199 Lushan Road, SND, Suzhou, Jiangsu, China, 215129, www.csisolar.com, support@csisolar.com

12 Years **Enhanced Product Warranty on Materials and Workmanship***

30 Years **Linear Power Performance Warranty***

1st year power degradation no more than 1%
Subsequent annual power degradation no more than 0.4%

*According to the applicable Canadian Solar Limited Warranty Statement.

MANAGEMENT SYSTEM CERTIFICATES*

ISO 9001: 2015 / Quality management system
ISO 14001: 2015 / Standards for environmental management system
ISO 45001: 2018 / International standards for occupational health & safety
IEC 62941: 2019 / Photovoltaic module manufacturing quality system

PRODUCT CERTIFICATES*

IEC 61215 / IEC 61730 / CE / MCS / UKCA / CGC
UL 61730 / IEC 61701 / IEC 62716 / IEC 60068-2-68
UNI 9177 Reaction to Fire: Class 1 / Take-e-way

* The specific certificates applicable to different module types and markets will vary, and therefore not all of the certifications listed herein will simultaneously apply to the products you order or use. Please contact your local Canadian Solar sales representative to confirm the specific certificates available for your Product and applicable in the regions in which the products will be used.

CSI Solar Co., Ltd. is committed to providing high quality solar photovoltaic modules, solar energy and battery storage solutions to customers. The company was recognized as the No. 1 module supplier for quality and performance/price ratio in the IHS Module Customer Insight Survey. Over the past 23 years, it has successfully delivered over 150 GW of premium-quality solar modules across the world.

ENGINEERING DRAWING (mm)

Rear View

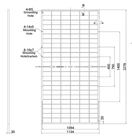

Frame Cross Section

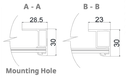

Mounting Hole

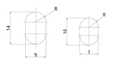

ELECTRICAL DATA | STC*

		Nominal Max. Power (Pmax)	Opt. Operating Voltage (Vmp)	Opt. Operating Current (Imp)	Open Circuit Voltage (Voc)	Short Circuit Current (Isc)	Module Efficiency
CS6W-575TB-AG		575 W	42.9 V	13.41 A	52.0 V	13.88 A	22.3%
Bifacial Gain**	5%	604 W	42.9 V	14.08 A	52.0 V	14.57 A	23.4%
	10%	633 W	42.9 V	14.75 A	52.0 V	15.27 A	24.5%
	20%	690 W	42.9 V	16.09 A	52.0 V	16.66 A	26.7%
CS6W-580TB-AG		580 W	43.1 V	13.46 A	52.2 V	13.93 A	22.5%
Bifacial Gain**	5%	609 W	43.1 V	14.13 A	52.2 V	14.63 A	23.6%
	10%	638 W	43.1 V	14.81 A	52.2 V	15.32 A	24.7%
	20%	696 W	43.1 V	16.15 A	52.2 V	16.72 A	26.9%
CS6W-585TB-AG		585 W	43.3 V	13.52 A	52.4 V	14.00 A	22.6%
Bifacial Gain**	5%	614 W	43.3 V	14.20 A	52.4 V	14.70 A	23.8%
	10%	644 W	43.3 V	14.87 A	52.4 V	15.40 A	24.9%
	20%	702 W	43.3 V	16.22 A	52.4 V	16.80 A	27.2%
CS6W-590TB-AG		590 W	43.5 V	13.57 A	52.6 V	14.06 A	22.8%
Bifacial Gain**	5%	620 W	43.5 V	14.25 A	52.6 V	14.76 A	24.0%
	10%	649 W	43.5 V	14.93 A	52.6 V	15.47 A	25.1%
	20%	708 W	43.5 V	16.28 A	52.6 V	16.87 A	27.4%
CS6W-595TB-AG		595 W	43.7 V	13.62 A	52.8 V	14.12 A	23.0%
Bifacial Gain**	5%	625 W	43.7 V	14.30 A	52.8 V	14.83 A	24.2%
	10%	655 W	43.7 V	14.98 A	52.8 V	15.53 A	25.4%
	20%	714 W	43.7 V	16.34 A	52.8 V	16.94 A	27.6%
CS6W-600TB-AG		600 W	43.9 V	13.68 A	53.0 V	14.18 A	23.2%
Bifacial Gain**	5%	630 W	43.9 V	14.36 A	53.0 V	14.89 A	24.4%
	10%	660 W	43.9 V	15.05 A	53.0 V	15.60 A	25.5%
	20%	720 W	43.9 V	16.42 A	53.0 V	17.02 A	27.9%

* Under Standard Test Conditions (STC) of irradiance of 1000 W/m², spectrum AM 1.5 and cell temperature of 25°C.
** Bifacial Gain: The additional gain from the back side compared to the power of the front side at the standard test condition. It depends on mounting (structure, height, tilt angle etc.) and albedo of the ground.

ELECTRICAL DATA

Operating Temperature	-40°C ~ +85°C
Max. System Voltage	1500 V (IEC/UL) or 1000 V (IEC/UL)
Module Fire Performance	TYPE 29 (UL 61730) or CLASS C (IEC61730)
Max. Series Fuse Rating	30 A
Protection Class	Class II
Power Tolerance	0 ~ + 10 W
Power Bifaciality*	80 %

* Power Bifaciality = $Pmax_{rear}$ / $Pmax_{front}$, both $Pmax_{rear}$ and $Pmax_{front}$ are tested under STC, Bifaciality Tolerance: ± 5 %

* The specifications and key features contained in this datasheet may deviate slightly from our actual products due to the on-going innovation and product enhancement. CSI Solar Co., Ltd. reserves the right to make necessary adjustment to the information described herein at any time without further notice.
Please be kindly advised that PV modules should be handled and installed by qualified people who have professional skills and please carefully read the safety and installation instructions before using our PV modules.

CSI Solar Co., Ltd.
199 Lushan Road, SND, Suzhou, Jiangsu, China, 215129, www.csisolar.com, support@csisolar.com

Apr. 2025. All rights reserved, PV Module Product Datasheet V2.1_EN

CS6W-590TB-AG / I-V CURVES

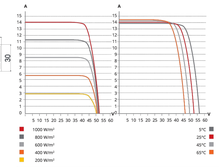

	Nominal Max. Power (Pmax)	Opt. Operating Voltage (Vmp)	Opt. Operating Current (Imp)	Open Circuit Voltage (Voc)	Short Circuit Current (Isc)
CS6W-575TB-AG	435 W	40.6 V	10.72 A	49.2 V	11.19 A
CS6W-580TB-AG	439 W	40.7 V	10.77 A	49.4 V	11.23 A
CS6W-585TB-AG	443 W	40.9 V	10.81 A	49.6 V	11.29 A
CS6W-590TB-AG	446 W	41.1 V	10.85 A	49.8 V	11.34 A
CS6W-595TB-AG	450 W	41.3 V	10.89 A	50.0 V	11.39 A
CS6W-600TB-AG	454 W	41.5 V	10.94 A	50.2 V	11.43 A

* Under Nominal Module Operating Temperature (NMOT), irradiance of 800 W/m².

MECHANICAL DATA

Specification	Data
Cell Type	TOPCon cells
Cell Arrangement	144 [2 x (12 × 6)]
Dimensions	2278 × 1134 × 30 mm (89.7 × 44.6 × 1.18 in)
Weight	32.3 kg (71.2 lbs)
Front Glass	2.0 mm heat strengthened glass with anti-reflective coating
Back Glass	2.0 mm heat strengthened glass
Frame	Anodized aluminium alloy
j-Box	IP68, 3 bypass diodes
Cable	4.0 mm² (IEC), 12 AWG (UL)
Cable Length (Including Connector)	300 mm (11.8 in) (+) / 200 mm (7.9 in) (-) or customized length*
Connector	T6 or MC4-EVO2 or MC4-EVO2A
Per Pallet	35 pieces
Per Container (40' HQ)	700 pieces or 560 pieces (only for US & Canada)

* For detailed information, please contact your local Canadian Solar sales and technical representatives.

TEMPERATURE CHARACTERISTICS

Specification	Data
Temperature Coefficient (Pmax)	-0.29 % / °C
Temperature Coefficient (Voc)	-0.25 % / °C
Temperature Coefficient (Isc)	0.05 % / °C
Nominal Module Operating Temperature	41 ± 3°C

PARTNER SECTION

1 CANADIAN SOLAR CS6W-600TB-AG SOLAR PANEL DATA SHEET
SCALE: NO SCALE

CSA GROUP

Certificate of Compliance

Certificate: 80016357 **Master Contract:** 249143
Project: 80250567 **Date Issued:** 2025-06-03

Issued to: CSI Solar Co., Ltd.
199 Lushan Road, SND
Suzhou, Jiangsu 215129
China
Attention: Yuan Zhou

The products listed below are eligible to bear the CSA Mark shown with adjacent indicators 'C' and 'US' for Canada and US or with adjacent indicator 'US' for US only or without either indicator for Canada only

C SA US

Issued by: Simon Shen
Simon Shen

PRODUCTS

CLASS - C531110 - POWER SUPPLIES-Photovoltaic Modules and Panels
CLASS - C531190 - POWER SUPPLIES-Photovoltaic Modules and Panels - Certified to US Standards

Photovoltaic modules with maximum DC system voltage of 1500 V, Safety Class II, Module Fire Performance Type 29, Type 30 or Type 38.

Model Series:
CS3U-xxxxPB-AG (xxx = 350 to 395 W),
CS3W-xxxMB-AG (xxx = 415 to 465 W),
CS3U-xxxMB-AG (xxx = 350 to 410 W),
CS3K-xxxMB-AG (xxx = 280 to 330 W),
CS3W-xxxPB-AG (xxx = 390 to 460 W),
CS3K-xxxPB-AG (xxx = 265 to 350 W),
CS3Y-xxxMB-AG (xxx = 465 to 510 W),
CS3Y-xxxPB-AG (xxx = 430 to 480 W),
CS6W-xxxMB-AG (xxx = 520 to 560 W),
CS6R-xxxMB-AG (xxx = 390 to 415 W),
CS7N-xxxMB-AG (xxx = 630 to 670 W),

 © 2025 CSA Group. All rights reserved.

CSA GROUP

Certificate: 80016357 **Master Contract:** 249143
Project: 80250567 **Date Issued:** 2025-06-03

CS7L-xxxMB-AG (xxx = 570 to 610 W),
CS7N-xxxTB-AG (xxx = 585 to 730 W),
CS7L-xxxTB-AG (xxx = 590 to 660 W),
CS6W-xxxTB-AG (xxx = 540 to 600 W),
CS6.1-72TB-xxx (xxx = 570 to 630 W),
CS6.1-72TB-xxxH (xxx = 570 to 630 W),
CS6.1-60TB-xxx (xxx = 470 to 525 W),
CS6.1-54TB-xxx (xxx = 415 to 470 W),
CS6.1-54TB2-xxx (xxx = 430 to 475 W),
CS6.1-72TD-xxx (xxx = 575 to 635 W),
CS6.1-54TD-xxx (xxx = 430 to 480 W),
CS6.1-54TD2-xxx (xxx = 430 to 480 W),
CS6Y-xxxTB-AG (xxx = 605 to 645 W),
CS6.2-66TB-xxx (xxx = 570 to 670 W),
CS6.2-66TB-xxxH (xxx = 570 to 670 W),
CS6.2-66TB-xxxH1 (xxx = 570 to 670 W),
CS6.2-66TB-xxxHP (xxx = 570 to 670 W),
CS6.2-66TD-xxx (xxx = 575 to 635 W),
CS6.2-48TD-xxx (xxx = 435 to 470 W),
CS7-66HB-xxx (xxx = 675 to 735 W),
CS7-60HB-xxx (xxx = 630 to 660 W),
CS6.2-66HB-xxx (xxx = 600 to 665 W),
CS6.2-66HB-xxxHP (xxx = 600 to 665 W),
CS6.2-66HB-xxxH (xxx = 600 to 665 W).

Model Type	Maximum DC System Voltage (V)	Open Circuit Voltage (V)	Maximum power voltage (V)	Short Circuit Current (A)	Maximum power current (A)	Maximum Power (Watts)	Maximum overcurrent protection rating (A)
CS3U-350PB-AG	1500	46.6	39.2	9.51	8.94	350	25
CS3U-355PB-AG	1500	46.8	39.4	9.59	9.02	355	25
CS3U-360PB-AG	1500	47.0	39.6	9.67	9.10	360	25
CS3U-365PB-AG	1500	47.2	39.8	9.75	9.18	365	25
CS3U-370PB-AG	1500	47.4	40.0	9.83	9.26	370	25
CS3U-375PB-AG	1500	47.6	40.2	9.91	9.34	375	25
CS3U-380PB-AG	1500	47.8	40.4	9.99	9.42	380	25
CS3U-385PB-AG	1500	48.0	40.6	10.07	9.50	385	25
CS3U-390PB-AG	1500	48.6	40.8	10.17	9.56	390	25
CS3U-395PB-AG	1500	48.8	41.0	10.24	9.64	395	25
CS3W-415MB-AG	1500	47.7	39.7	11.22	10.46	415	25
CS3W-420MB-AG	1500	47.9	39.9	11.27	10.53	420	25
CS3W-425MB-AG	1500	48.1	40.1	11.32	10.6	425	25
CS3W-430MB-AG	1500	48.3	40.3	11.37	10.68	430	25

 © 2025 CSA Group. All rights reserved.

CSA GROUP

Certificate: 80016357 **Master Contract:** 249143
Project: 80250567 **Date Issued:** 2025-06-03

Model Type	Maximum DC System Voltage (V)	Open Circuit Voltage (V)	Maximum power voltage (V)	Short Circuit Current (A)	Maximum power current (A)	Maximum Power (Watts)	Maximum overcurrent protection rating (A)
CS7L-610TB-AG	1500	42.5	35.3	18.21	17.29	610	35
CS7L-615TB-AG	1500	42.7	35.5	18.26	17.33	615	35
CS7L-620TB-AG	1500	42.9	35.7	18.31	17.37	620	35
CS7L-625TB-AG	1500	43.1	35.9	18.36	17.41	625	35
CS7L-630TB-AG	1500	43.3	36.1	18.41	17.46	630	35
CS7L-635TB-AG	1500	43.5	36.3	18.46	17.5	635	35
CS7L-640TB-AG	1500	43.7	36.5	18.51	17.54	640	35
CS7L-645TB-AG	1500	43.9	36.7	18.56	17.58	645	35
CS7L-650TB-AG	1500	44.1	36.9	18.61	17.62	650	35
CS7L-655TB-AG	1500	44.4	37.1	18.63	17.66	655	35
CS7L-660TB-AG	1500	44.6	37.3	18.68	17.70	660	35
CS6W-540TB-AG	1500	50.6	41.5	13.47	13.02	540	30
CS6W-545TB-AG	1500	50.8	41.7	13.54	13.07	545	30
CS6W-550TB-AG	1500	51.0	41.9	13.59	13.13	550	30
CS6W-555TB-AG	1500	51.2	42.1	13.64	13.19	555	30
CS6W-560TB-AG	1500	51.4	42.3	13.69	13.24	560	30
CS6W-565TB-AG	1500	51.6	42.5	13.75	13.30	565	30
CS6W-570TB-AG	1500	51.8	42.7	13.81	13.35	570	30
CS6W-575TB-AG	1500	52.0	42.9	13.88	13.41	575	30
CS6W-580TB-AG	1500	52.2	43.1	13.93	13.46	580	30
CS6W-585TB-AG	1500	52.4	43.3	14.00	13.52	585	30
CS6W-590TB-AG	1500	52.6	43.5	14.06	13.57	590	30
CS6W-595TB-AG	1500	52.8	43.7	14.12	13.62	595	30
CS6W-600TB-AG	1500	53.0	43.9	14.18	13.68	600	30
CS6.1-72TB-575	1500	50.6	42.8	14.18	13.32	570	30
CS6.1-72TB-580	1500	51.0	43.2	14.30	13.43	580	30
CS6.1-72TB-585	1500	51.2	43.4	14.36	13.48	585	30
CS6.1-72TB-590	1500	51.4	43.6	14.42	13.54	590	30
CS6.1-72TB-595	1500	51.6	43.8	14.48	13.59	595	30
CS6.1-72TB-600	1500	51.8	44.0	14.54	13.64	600	30
CS6.1-72TB-605	1500	52.0	44.2	14.60	13.69	605	30
CS6.1-72TB-610	1500	52.2	44.4	14.66	13.74	610	30
CS6.1-72TB-615	1500	52.4	44.6	14.72	13.79	615	30
CS6.1-72TB-620	1500	52.6	44.8	14.78	13.84	620	30
CS6.1-72TB-625	1500	52.8	45.0	14.84	13.89	625	30
CS6.1-72TB-630	1500	53.0	45.2	14.90	13.94	630	30
CS6.1-72TB-570H	1500	50.6	42.8	14.18	13.32	570	30

 © 2025 CSA Group. All rights reserved.

CSA GROUP

Certificate: 80016357 **Master Contract:** 249143
Project: 80250567 **Date Issued:** 2025-06-03

APPLICABLE REQUIREMENTS

CSA C22.2 No. 61730-1:19 Second Edition	Photovoltaic (PV) module safety qualification - Part 1: Requirements for construction, 2019-12
CSA C22.2 No. 61730-2:19 Second Edition	Photovoltaic (PV) module safety qualification - Part 2: Requirements for testing, 2019-12
UL 61730-1 Second Edition	Photovoltaic (PV) Module Safety Qualification - Part 1: Requirements for Construction, October 28, 2022
UL 61730-2 Second Edition	Photovoltaic (PV) Module Safety Qualification - Part 2: Requirements for Testing, October 28, 2022, Reprint Nov 10, 2023

Notes:

Products certified under Class C531110 have been certified under CSA's ISO/IEC 17065 accreditation with the Standards Council of Canada (SCC). www.scc.ca

SCC Accredited CB-006 SCC Accreditation ICON

 © 2025 CSA Group. All rights reserved.

2 CANADIAN SOLAR CS6W-600TB-AG SOLAR PANEL UL61730 LISTING
SCALE: NO SCALE

EXCLUDED IN ALT. BID

PBK
www.pbk.com
559-448-8400
FRESNO, CA

PARLIER HS STADIUM REPLACEMENT
603 3rd Street
Parlier, CA 93648

CLIENT PROJECT NO. 250093
DSA SUBMISSION DSA FILE NO. : 10-H12
DSA APPL. NO. : 02-124002

PARLIER UNIFIED SCHOOL DISTRICT

REGISTERED PROFESSIONAL ENGINEER R.J. HARDIN No. 9125 ELECTRICAL STATE OF CALIFORNIA

CLIENT	
PARLIER UNIFIED SCHOOL DISTRICT	
DATE: YYYY/MM/DD	PROJECT NUMBER: 250093

DRAWING HISTORY

No.	Description	Date
3	RFI #003	06/03/2026
2	ADDENDUM #3	05/08/2026
1	ADDENDUM #2	06/12/2026

CHECKED BY: HDE
DRAWN BY: HDE

SOLAR INFORMATION

EX2.2

Plot Stamp:
6/22/2026 9:21:06 AM

SOLAR INFORMATION
EX2.3
FOR BLUEBEAM LABELING/OCR:

0"
1"

NXT UMOUNT® HD RAILS

BUILT FOR STRENGTH. DESIGNED FOR SIMPLICITY.

UNIRAC BETTER SOLAR STARTS HERE

The new NXT Umount® HD Rail delivers heavy-duty performance without added complexity. Engineered for demanding conditions, it offers superior structural capacity while maintaining full compatibility with the NXT Umount® system. This is not a replacement—it's a high-performance addition to the Unirac portfolio.

INDUSTRY-LEADING SPANS – UP TO 10 ½ FT

- Enables 2-rail installs in nearly all wind zones
- Increased attachment spans for snow loads

FULLY COMPATIBLE WITH NXT™ SYSTEM

- Works with all existing NXT™ clamps and accessories
- Three new SKUs: rail, splice, and end caps

INTEGRATED STRUCTURAL SPLICE

- No rail cuts or extra hardware needed
- Installs like standard NXT splice for fast, efficient installs

OPTIMIZED RAIL DESIGN

- Reinforced profile is designed for superior rigidity
- Lightest rail in its class – cuts weight without cutting strength
- Domestically manufactured to ensure reliable supply

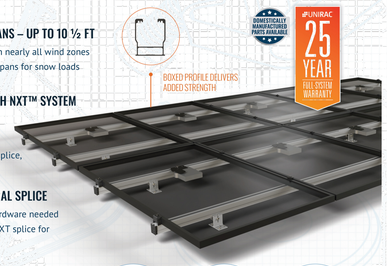



HD RAIL
Wide channel supports up to 8 wire connectors

STRUCTURAL SPLICE
Load-rated for cantilever installs—no extra attachment needed

RAIL END CAP
Custom-fit design for the HD rail profile

SPAN CHART - see next page >

FOR QUESTIONS OR CUSTOMER SERVICE CONTACT:
505-242-6411 | SALES@UNIRAC.COM | WWW.UNIRAC.COM
PUB-20250EXPSO-V1
CONFORMS TO UL3741 CONFORMS TO UL2703 ISO 9001:2015 | 14001:2015 CERTIFIED

NXT UMOUNT® HD RAILS

BUILT FOR STRENGTH. DESIGNED FOR SIMPLICITY.

UNIRAC BETTER SOLAR STARTS HERE

LOAD		NXT UMOUNT® RAIL SPANS*								
SNOW (PSF)	WIND (PMPH)	32"	48"	64"	72"	80"	96"	112"	126"	128"
0	90									
	120									
	140									
	160									
	180									
10	90									
	120									
	140									
	160									
20	90									
	120									
	140									
	160									
30	90									
	160									
40	90									
	160									
80	160									
120	160									

NXT UMOUNT® RAILS
NXT UMOUNT® HD RAILS

- Industry-leading spans **up to 10 ½ ft** for fewer attachments
- Expands installation into challenging regions and high-demand zones where standard rails fall short
- Optimized structural splice ensures maximum integrity

*This table provides a quick reference summary on rail performance across various regional and site requirements, and is not intended to be used a detailed specific for a specific project. Rail performance may differ and vary for a specific project from what is depicted in the table. Detailed span tables and/or structural certifications must be consulted for detail design specifications.

FOR QUESTIONS OR CUSTOMER SERVICE CONTACT:
505-242-6411 | SALES@UNIRAC.COM | WWW.UNIRAC.COM
PUB-20250EXPSO-V1
CONFORMS TO UL3741 CONFORMS TO UL2703 ISO 9001:2015 | 14001:2015 CERTIFIED

NXT UMOUNT® CLAMPS

COMBO CLAMP TRANSITION

UNIRAC BETTER SOLAR STARTS HERE

- The NEW Combo Clamp features a Push & Twist design for faster, more efficient installations. No orientation required. Simply drop it into the rail, twist, and fasten to the module. Minimal pressure locks the clamp securely in place.
- Both Combo Clamps are universal, functioning as mid and end clamps to reduce part count and speed up builds.
- Designed to accommodate 30–40mm module frames, each clamp includes an integrated bonding feature to ensure a reliable electrical bond between the module and rail.
- Cross-compatible by design, both clamp versions can be used within the same array while maintaining 1/2"module spacing, simplifying installation and inventory management.



NXT UMOUNT® END CAP KITS

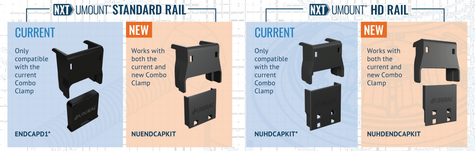

* The following part #'s are only available while supplies last – CCLAMPD1-US, ENDCAPD1, NUHDCAPKIT

FOR QUESTIONS OR CUSTOMER SERVICE CONTACT:
505-242-6411 | SALES@UNIRAC.COM | WWW.UNIRAC.COM
PUB20250AAPR09-V1
CONFORMS TO UL3741 CONFORMS TO UL2703 ISO 9001:2015 | 14001:2015 CERTIFIED

STRONGHOLD | BUTYL

UNIRAC BETTER SOLAR STARTS HERE

SIMPLIFIED FLASHLESS SOLUTION

- One-step Butyl application
- Minimize labor with one step installation using the pre-applied, peel and install, butyl design
- Reliable waterproofing without messy sealant
- Eliminate risk of roof damage. No more disturbing shingles

OPTIMIZED FOR NXT UMOUNT, UNIRAC'S OPEN CHANNEL RAIL SYSTEM

- Open slot design for ease of rail connectivity with included STRONGHOLD™ NXT UMOUNT® rail clamp
- STRONGHOLD™ Butyl combined with the NXT UMOUNT® system make installation and wire management a breeze
- UL Certified with NXT UMOUNT®

DUAL MOUNTING OPTIONS

- Pre-attached butyl pad: Simply peel, stick, and fasten with the two (2) included screws for rafter mount
- For direct-to-deck applications, simply install additional decking screws

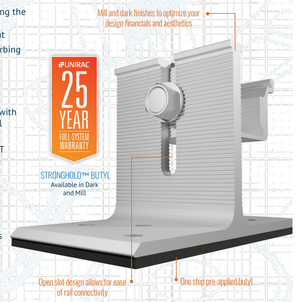

ADDITIONAL BENEFITS

- Competitively priced with standard rafter attachments

WHY STRONGHOLD™ BUTYL?

Unirac's STRONGHOLD™ Butyl is efficient, dependable, and optimized for UNIRAC's NXT UMOUNT® system. The pre-applied butyl pad removes the need for additional flashing. Just peel the liner, place the attachment, and fasten it to the roof. In addition, the butyl, used throughout the roofing and solar industries for its reliability, conforms to the screws and roof for a robust, dependable seal with no extra work! Couple this with the NXT UMOUNT® system, and you have a highly reliable, easy-to-install system with integrated wire management

KITTED WITH

- ONE (1) Stronghold- Butyl direct-to-deck attachment with pre-applied butyl patch. (Extra patches for shimming available.)
- TWO (2) screws for rafter installation (Additional screws for direct-to-deck applications available.)
- ONE (1) NXT Rail Clamp

FOR QUESTIONS OR CUSTOMER SERVICE CONTACT:
505-242-6411 | SALES@UNIRAC.COM | WWW.UNIRAC.COM
PUB20250SUNC5-V1
CONFORMS TO UL2703A ISO 9001:2015 | 14001:2015 CERTIFIED

1 UNIRAC NXT PV MOUNTING COMPONENTS
SCALE: NO SCALE

Tectonic
PRACTICAL SOLUTIONS. EXCEPTIONAL SERVICE.

January 16, 2026

Unirac
Attn: Engineering Services Department
1411 Broadway Boulevard NE
Albuquerque, NM 87102-1545
TEL: (505) 242-6411

RE: ENGINEERING CERTIFICATION LETTER FOR THE UNIRAC NXT UMOUNT AND NXT UMOUNT HD SUPPORT SYSTEM
STATE: CALIFORNIA
TECTONIC WORK ORDER #: 12557.117

The Unirac NXT UMount and NXT UMount HD systems are proprietary framed photovoltaic (PV) panel support structures designed for roof-mounted applications. Tectonic Engineering Consultants (Tectonic) has reviewed the NXT system's design methodology, including the use of Unirac's online design platform, U-Builder.

Based on our evaluation, Tectonic has determined that the design approach is rational and complies with the structural requirements outlined in the following reference standards:

Applicable Codes and Standards:

- 2025 *California Building Code*
- *Aluminum Design Manual* (2020), published by the Aluminum Association
- *International Building Code* (2024 edition), published by the International Code Council, including provisions from SEAOC PV-2 (2017)
- *ASCE/SEI 7* (2022 edition), *Minimum Design Loads for Buildings and Other Structures*, published by the American Society of Civil Engineers

This letter certifies that the structural analysis of the racking members, connections, and components directly associated with the Unirac system is in compliance with the above codes and standards. If the loading criteria fall outside of Unirac's published specifications, the owner must contact Unirac to obtain a site-specific structural certification.

The Unirac design tool must be used under the responsible charge of a licensed professional engineer, as required by the authority having jurisdiction. Please note that the design tool and Unirac do not evaluate the PV modules themselves or address specific corrosion resistance requirements. For further details, refer to Unirac's construction and installation drawings and manuals.

Sincerely,
Tectonic



Michael Martin, P.E.
Senior Project Manager
CA P.E. License Number: C94191

Project Contact Info
1279 Route 300 | Newburgh, NY 12550
845.567.6656 Tel | 845.567.8703 Fax
tectonicengineering.com
Equal Opportunity Employer

2 UNIRAC NXT CSA CERTIFICATE OF COMPIANCE
SCALE: NO SCALE

intertek
Total Quality. Assured.

AUTHORIZATION TO MARK

This authorizes the application of the Certification Mark(s) shown below to the models described in the Product(s) Covered section when made in accordance with the conditions set forth in the Certification Agreement and Listing Report. This authorization also applies to multiple listee model(s) identified on the correlation page of the Listing Report.

This document is the property of Intertek Testing Services and is not transferable. The certification mark(s) may be applied only at the location of the Party Authorized To Apply Mark.

Applicant:	Unirac, Inc.	**Manufacturer:**	
Address:	1411 Broadway Blvd Ne Albuquerque, NM 87102	**Address:**	
Country:	USA	**Country:**	

Party Authorized To Apply Mark: Same as Manufacturer
Report Issuing Office: Intertek Testing Services NA, Inc., Lake Forest, CA
Control Number: 3110037 **Authorized by:** for L. Matthew Snyder, Certification Manager

ETL SEMKO US
Intertek

This document supersedes all previous Authorizations to Mark for the noted Report Number.

This Authorization to Mark is for the exclusive use of Intertek's Client and is provided pursuant to the Certification agreement between Intertek and its Client. Intertek's responsibility and liability are limited to the terms and conditions of the agreement. Intertek assumes no liability to any party, other than to the Client in accordance with the agreement, for any loss, expense or damage occasioned by the use of this Authorization to Mark. Only the Client is authorized to permit copying or distribution of this Authorization to Mark and then only in its entirety. Use of Intertek's Certification mark is restricted to the conditions laid out in the agreement and in this Authorization to Mark. Any further use of the Intertek name for the sale or advertisement of the tested material, product or service must first be approved in writing by Intertek. Initial Factory Assessments and Follow up Services are for the purpose of assuring appropriate usage of the Certification mark in accordance with the agreement, they are not for the purposes of production quality control and do not relieve the Client of their obligations in this respect.

Intertek Testing Services NA Inc.
545 East Algonquin Road, Arlington Heights, IL 60005
Telephone 800-345-3851 or 847-439-5667 Fax 312-283-1672

Standard(s):	Outline of Investigation for Flashing Devices and Systems for Rooftop-Mounted Photovoltaics [UL SUBJECT 2703A:2022 Ed.1]
Product:	Flashing Device for Rooftop-Mounted Photovoltaics
Brand Name:	UNIRAC
Models:	DTD BUTYL ATTACHMENT ASSEMBLY - SFM DTD BUTYL ATTACHMENT ASSEMBLY - SM DTD BUTYL ATTACHMENT ASSEMBLY - NXT/SH

ATM for Report 105424751LAX-001 Page 1 of 1 ATM Issued: 6-Aug-2024
ED 16.3.10 (1-Jul-2022) Mandatory

3 UNIRAC NXT CSA BUTYL STRONGHOLD ATTACHMENT 2703A
SCALE: NO SCALE

PBK
www.pbk.com
559-448-8400
FRESNO, CA

PARLIER HS STADIUM REPLACEMENT

603 3rd Street
Parlier, CA 93648

CLIENT PROJECT NO: 250093
DSA SUBMISSION
DSA APPL. NO.: 02-124002 DSA FILE NO.: 10-H12

PARLIER UNIFIED SCHOOL DISTRICT

REGISTERED PROFESSIONAL ENGINEER R.J. HARDIN No. 9125 ELECTRICAL STATE OF CALIFORNIA

CLIENT	
PARLIER UNIFIED SCHOOL DISTRICT	
DATE YYYY/MM/DD	PROJECT NUMBER 250093

DRAWING HISTORY

No.	Description	Date
1	RFI #003	06/03/2026
2	ADDENDUM #3	06/09/2026
3	ADDENDUM #4	06/12/2026

CHECKED BY: HDE
DRAWN BY: HDE

SOLAR INFORMATION

EX2.3

EXCLUDED IN ALT. BID

Plot Stamp:
6/22/2026 9:21:06 AM

SOLAR INFORMATION
EX2.4
FOR BLUEBEAM LABELING/OCR:

0"
1"

Certificate of Compliance

Certificate: 70131735 **Master Contract:** 266909

Project: 80291178 **Date Issued:** 2026-04-13

Issued to: **Unirac**
1411 Broadway NE
Albuquerque, New Mexico
87102
United States

Issued by: *Michael Hoffnagle*
Michael Hoffnagle

Attention: Rob D'Anastasio

The products listed below are eligible to bear the CSA Mark shown with adjacent indicators 'C' and 'US' for Canada and US or with adjacent indicator 'US' for US only or without either indicator for Canada only.

C US

PRODUCTS

Class 5313 02 POWER SUPPLIES - PHOTOVOLTAICS - PV Racking
Class 5313 82 POWER SUPPLIES - PHOTOVOLTAICS - PV Racking and clamping systems-Certified to US Standards

EcoFoot5D is a 5 degree ballasted PV racking system that is installed parallel to the roof in the landscape orientation.
EcoFoot2+ is a ballasted PV racking system that is installed parallel to the roof in both portrait and landscape orientations.

Model(s)
EcoFoot5D, EcoFoot2+

EcoFoot5D & EcoFoot2+

The systems listed are low slope ballasted systems designed to provide bonding/grounding, and mechanical stability for photovoltaic modules. The system employs polymeric bays and is ballasted with ASTM C1491 concrete blocks. Modules are secured to the racking system with

 © 2026 CSA Group. All rights reserved.

Upward Design Load (lb/ft²)	18.01[1]
Down-Slope Load (lb/ft²)	5.87

[1]This is the design load value in uplift for non-south row modules and south row modules with either ballasting or mechanical attachments south of the south row modules

[2]This is the design load value in uplift for south row modules that utilize the south rail stiffener component and do not utilize ballasting or mechanical attachments south of the south row modules

NXT UMOUNT is a flush to roof extruded aluminum rail PV racking system that is installed parallel to the roof in landscape or portrait orientations

Model(s)
NXT UMOUNT

NXT UMOUNT

The system listed is designed to provide bonding/grounding, and mechanical stability for photovoltaic modules. The system is secured to the roof with the L-Foot components through the roofing material to building structure. Modules are secured to the racking system with aluminum mid clamps and aluminum end clamps. The modules are bonded to the racking system with bonding mid and end clamps with piercing points. Fire ratings of Class A with Type 1, 2, 3 (with metallic frame), 10(with metallic frame), 19, 22, 25, 29, 30 or 38 for steep and low slope. Tested at 5" interstitial gap which allows installation at any stand-off height.

The grounding of the system is intended to comply with the latest edition of the National Electrical Code, to include NEC 250 & 690. Local codes compliance is required, in addition to national codes. All grounding/bonding connections are to be torqued in accordance with the Installation Manual and the settings used during the certification testing for the current edition of the project report.

NXT Tilt Legs is a flat roof configuration of the NXT UMOUNT system that utilizes an attachment variation that involves structural standoffs to achieve a range of module tilt angles. The NXT Tilt Legs installation instructions are captured in an Installation Addendum that covers both the SolarMount Tilt Legs system and the NXT Tilt Legs system. NXT Tilt Legs has mechanical load ratings independent of the NXT UMOUNT mechanical load ratings.

NXT UMOUNT Ghost Rail is a version of NXT UMOUNT system where the south row is identical to NXT UMOUNT in that there are two rails in that row of modules. On all non-south rows instead of two rails per row of modules there is 1 rail per row of modules and the absent rail is replaced with a coupler component.

Latest SolarMount NXT Tilt Legs Installation Addendum revisions: PUB2025APR25, PUB2025APR25-Trinity, & PUB2025SEP26_New Logo

Latest NXT UMOUNT Install Manual revision: PUB2026MAR01

Latest NXT UMOUNT Ghost Rail Install Manual Revision: PUB2026JAN23

NXT UMOUNT UL 2703 Mechanical Load ratings for tested module area 21.86 sq ft:

 © 2026 CSA Group. All rights reserved.

NXT Systems without DTD Butyl Attachment P30817211, Rail Splice P30808218, or Rail Clamp P30817214	
Downward Design Load (lb/ft²)	113.7
Upward Design Load (lb/ft²)	51.1
Down-Slope Load (lb/ft²)	16.8

NXT Systems with DTD Butyl Attachment P30817211, Rail Splice P30808218, or Rail Clamp P30817214	
Downward Design Load (lb/ft²)	51.1
Upward Design Load (lb/ft²)	51.1
Down-Slope Load (lb/ft²)	16.8

NXT UMOUNT UL 2703 and TIL Mechanical Load ratings tested module area 27.76 sq ft:

NXT Systems without DTD Butyl Attachment P30817211, Rail Splice P30808218, or Rail Clamp P30817214	
Downward Design Load (lb/ft²)	50.1
Upward Design Load (lb/ft²)	22.2
Down-Slope Load (lb/ft²)	8.0

UL 2703 and TIL Mechanical Load ratings tested module area 29.49 sq ft:

NXT Systems with all components included in PUB2023NOV10 Install Manual	
Downward Design Load (lb/ft²)	37.06
Upward Design Load (lb/ft²)	20.97
Down-Slope Load (lb/ft²)	7.53

UL 2703 and TIL Mechanical Load ratings tested module area 30.05 sq ft:

NXT Systems with all components included in PUB2023NOV10 Install Manual	
Downward Design Load (lb/ft²)	36.5
Upward Design Load (lb/ft²)	20.96
Down-Slope Load (lb/ft²)	7.6

NXT HD Rail UL 2703 Mechanical Load ratings:

Module Area up to 27.81 sq ft	
Downward Design Load (lb/ft²)	50.47
Upward Design Load (lb/ft²)	25.57
Down-Slope Load (lb/ft²)	8.2

NXT Tilt Legs UL 2703 Mechanical Load ratings:

Module Area up to 21.05 sq ft	
Downward Design Load (lb/ft²)	51

 © 2026 CSA Group. All rights reserved.

Module Area up to 27.81 sq ft	
Downward Design Load (lb/ft²)	32.23
Down-Slope Load (lb/ft²)	10.93

Module Area up to 27.81 sq ft	
Downward Design Load (lb/ft²)	30.35
Upward Design Load (lb/ft²)	24.1
Down-Slope Load (lb/ft²)	8.13

NXT Tilt Legs Test Loads:

Module Area up to 21.05 sq ft	
Downward Design Load (lb/ft²)	76.5
Upward Design Load (lb/ft²)	48.35
Down-Slope Load (lb/ft²)	16.40

Module Area up to 27.81 sq ft	
Downward Design Load (lb/ft²)	45.53
Upward Design Load (lb/ft²)	36.15
Down-Slope Load (lb/ft²)	12.2

NXT UMOUNT Ghost Rail UL 2703 Mechanical Load ratings:

Module Area up to 21.65 sq ft	
Downward Design Load (lb/ft²)	16.8
Upward Design Load (lb/ft²)	28.2
Down-Slope Load (lb/ft²)	9.6

NXT UMOUNT Ghost Rail Test Loads:

Module Area up to 21.65 sq ft	
Downward Design Load (lb/ft²)	25.2
Upward Design Load (lb/ft²)	42.3
Down-Slope Load (lb/ft²)	14.5

RM DT, East West facing, low slope, ballasted roof mount PV racking system
RM 5 South, South facing, low-slope, ballasted roof-mount PV racking system

Model(s)
RM 5 South, RM DT

RM 5 South and RM DT

 © 2026 CSA Group. All rights reserved.

SM Ascender Flush Mount

The system listed is designed to provide bonding/grounding, and mechanical stability for photovoltaic modules. The system is secured to the roof with the L-Foot components through the roofing material to building structure. Modules are secured to the racking system with aluminum mid clamps and aluminum end clamps. Fire ratings of Class A with Type 1, 2, 3 (with metallic frame), 10(with metallic frame), 19, 22, 25, 29, 30 or 38 for steep slope. Class A with Type 1, 2, 29, 30 or 38 for low slope. Tested at 5" interstitial gap which allows installation at any stand-off height.

The grounding of the system is intended to comply with the latest edition of the National Electrical Code, to include NEC 250 & 690. Local codes compliance is required, in addition to national codes. All grounding/bonding connections are to be torqued in accordance with the Installation Manual and the settings used during the certification testing for the current edition of the project report.

Latest Install Manual revision: PUB2026JAN23

UL 2703 Mechanical Load ratings for tested module area 27.76 sq ft:

Downward Design Load (lb/ft²)	28.4
Upward Design Load (lb/ft²)	31.9
Down-Slope Load (lb/ft²)	5.2

UL 2703 and TIL Mechanical Load ratings tested module area 27.76 sq ft:

Downward Design Load (lb/ft²)	17.1
Upward Design Load (lb/ft²)	17.1
Down-Slope Load (lb/ft²)	5.2

The grounding of the system is intended to comply with the latest edition of the National Electrical Code, to include NEC 250 & 690. Local codes compliance is required, in addition to national codes. All grounding/bonding connections are to be torqued in accordance with the Installation Manual and the settings used during the certification testing for the current edition of the project report.

APPLICABLE REQUIREMENTS

Standards Used	Description
CSA TIL No. A-40:20	PV Module and Panel Rack Mounting Systems and Accessories
ANSI/UL 2703:2015 - First Edition - Including revisions through June 11, 2025	UL Standard for Safety Mounting Systems, Mounting Devices, Clamping/Retention Devices, and Ground Lugs for Use with Flat-Plate Photovoltaic Modules and Panels

Conditions Of Acceptability

The grounding of the system is intended to comply with the latest edition of the National Electrical Code, to include NEC 250 & 690. Local code compliance is required, in addition to national codes. All grounding/bonding connections are to be torqued in accordance with the Installation Manual and the settings used during the certification testing for the current edition of the project report.

 © 2026 CSA Group. All rights reserved.

Notes:

Products certified under Class(es) C531302, C531382 have been certified under CSA's ISO/IEC 17065 accreditation with the Standards Council of Canada (SCC). www.scc.ca

SCC Accredited CB-PVS OCPS Accredit CCN

 © 2026 CSA Group. All rights reserved.

1 UNIRAC NXT UMOUNT TESTING REPORT
SCALE: NO SCALE

EXCLUDED IN ALT. BID

PBK
www.pbk.com
559-448-8400
FRESNO, CA

PARLIER HS STADIUM REPLACEMENT
603 3rd Street
Parlier, CA 93648

CLIENT PROJECT NO.: 250093
DSA SUBMISSION
DSA APPL. NO.: 02-124002 DSA FILE NO.: 10-H12

PARLIER UNIFIED SCHOOL DISTRICT

REGISTERED PROFESSIONAL ENGINEER R.J. HARDIN NO. 9125 ELECTRICAL STATE OF CALIFORNIA

CLIENT	
PARLIER UNIFIED SCHOOL DISTRICT	
DATE: YYYY/MM/DD	PROJECT NUMBER: 250093

DRAWING HISTORY

No.	Description	Date
1	RFI #003	06/03/2026
2	ADDENDUM #3	06/08/2026
3	ADDENDUM #4	06/12/2026

CHECKED BY: HDE
DRAWN BY: HDE

SOLAR INFORMATION

EX2.4

Plot Stamp:
6/22/2026 9:21:06 AM

0"
1"

BUILDING M - T24 COMPLIANCE FORMS
EX3.0
FOR BLUEBEAM LABELING/OCR:

STATE OF CALIFORNIA
Electrical Power Distribution
CALIFORNIA ENERGY COMMISSION

CERTIFICATE OF COMPLIANCE		NRCC-ELC-E
This document is used to demonstrate compliance with mandatory requirements in §130.5, for electrical systems in newly constructed nonresidential and hotel/motel occupancies and §160.6 and §160.9 for electrical systems in newly constructed multifamily occupancies. Additions and alterations to electrical service systems in nonresidential and hotel/motel occupancies will also use this document to demonstrate compliance per §141.0(a) or §141.0(b)2P for alterations. For multifamily addition or alterations compliance will be documented per §180.1(a) or §180.2 (b)4bvii		
Project Name: Parlier HS Stadium Replacement - Building M	**Report Page:**	**(Page 1 of 6)**
Project Address: 603 3rd Street	**Date Prepared:**	5/4/2026

A. GENERAL INFORMATION

01	Project Location (city)	Parlier	02	Climate Zone	13
			03	Occupancy Types Within Project:	

● Retail ● Support Areas ● All Other Occupancies

B. PROJECT SCOPE

This table includes electrical systems that are within the scope of the permit application.

01	02	03	04	05	06	07
Electrical Service Designation/ Description	Scope of Work [1]	Rating[2] (kVA)	Utility Provided Metering System Exception to §130.5(a)/§160.6(a)[3]	System subject to CA Elec Code Article 517 Exception to §130.5(a)and (b)	Demand Response Controls	Provides power to dwelling units/common living areas only in multifamily occupancy
MSB	New electrical service equipment and meter	997	☐	☐	Where required, demand response controls must be specified which are capable of receiving and automatically responding to at least one standards based messaging protocol which enables demand response after receiving a demand response signal. Sections §120.2/§160.3, §130.1/§160.5, and §130.5/§160.5, and mechanical, indoor lighting, and sign lighting Certificate of Compliance documents will indicate when demand response controls are required.	☐

[1] *FOOTNOTES: Adding only new feeders and branch circuits triggers Voltage Drop 130.5(c)/160.6(c), no other requirements from 130.5/160.6 are required.*
[2] *If common use areas in a multifamily are submetered, rating is for submeter size serving common use areas.*
[3] *Applicable if the utility company is providing a metering system that indicates instantaneous kW demand and kWh for a utility-defined period.*

STATE OF CALIFORNIA
Electrical Power Distribution
CALIFORNIA ENERGY COMMISSION

CERTIFICATE OF COMPLIANCE		NRCC-ELC-E
Project Name: Parlier HS Stadium Replacement - Building M	**Report Page:**	**(Page 2 of 6)**
	Date Prepared:	5/4/2026

C. COMPLIANCE RESULTS

Results in this table are automatically calculated from data input and calculations in Tables F through J. Note: If any cell on this table says "COMPLIES with Exceptional Conditions" refer to Table D. Exceptional Conditions for guidance or see applicable Table referenced below.

01		02		03		04	05	06
Service Electrical Metering §130.5(a)/ §160.6(a) (See Table F)	AND	Separation for Monitoring §130.5(b)/ §160.6(b) (See Table G)	AND	Voltage Drop §130.5(c)/ §160.6(c) (See Table H)	AND	Controlled Receptacles §130.5(d)/ §160.6(d) (See Table I)	Electric Ready §160.9 (See Table J)	**Compliance Results**
Yes	AND	Yes	AND	Yes	AND			COMPLIES

D. EXCEPTIONAL CONDITIONS

This table is auto-filled with uneditable comments because of selections made or data entered in tables throughout the form.

E. ADDITIONAL REMARKS

This table includes remarks made by the permit applicant to the Authority Having Jurisdiction.

F. SERVICE ELECTRICAL METERING

This table includes new or replacement electrical service systems OR equipment to demonstrate compliance with §130.5(e) / §160.6(a). For multifamily occupancies, submetered systems that provide power to common use areas must meet the following metering requirements. Submetered systems providing power to dwelling units do not.

01	02	03				04	05	
Electrical Service Designation/ Description	Rating[1] (kVA)	Required Metering Capabilities per Table 130.5-A				Location of Requirements in Construction Documents	Field Inspector	
		Instantaneous Demand (kW)	Historical Peak Demand (kW)	Tracking kW's for user-defined period	kWh per rate period		Pass	Fail
MSB	997	☒	☒	☒	☐	EX1.1	☐	☐

[1] *FOOTNOTES: If common use areas in a multifamily are submetered, rating is for submeter size serving common use areas.*

STATE OF CALIFORNIA
Electrical Power Distribution
CALIFORNIA ENERGY COMMISSION

CERTIFICATE OF COMPLIANCE		NRCC-ELC-E
Project Name: Parlier HS Stadium Replacement - Building M	**Report Page:**	**(Page 3 of 6)**
	Date Prepared:	5/4/2026

G. SEPARATION OF ELECTRICAL CIRCUITS FOR ENERGY MONITORING

This table includes entirely new or complete replacement electrical power distribution systems to demonstrate compliance with §130.5(b)/§160.6(b). Any load types that are not included in the service do not need to be shown. For multifamily occupancies, submetered systems that provide power to dwelling units do not need to meet these separation requirements and therefore load types on those submetered systems also do not need to be shown.

01	02	03	04	05	
Load Type per Table 130.5-B [1]	Minimum Required Separation of Load per Table 130.5-B	Compliance Method[2]	Location of Requirements in Construction Documents	Field Inspector	
				Pass	Fail
MSB					
Lighting including exit, egress and exterior	All lighting disaggregated by floor, type or area	Method 2: Switchboards/ motor control centers/ panelboard supply other distribution equipment with loads disaggregated for each load type	EX1.1	☐	☐
HVAC systems and components	All HVAC in aggregate and each HVAC load rated at least 50 kVA	Method 2: Switchboards/ motor control centers/ panelboard supply other distribution equipment with loads disaggregated for each load type	EX1.1	☐	☐
Plug Loads and appliances less than 25kVA	All plug loads separated by floor, type or area Groups of plug loads exceeding 25 kVA connected load in an area less than 5000 sf	Method 2: Switchboards/ motor control centers/ panelboard supply other distribution equipment with loads disaggregated for each load type	EX1.1	☐	☐

STATE OF CALIFORNIA
Electrical Power Distribution
CALIFORNIA ENERGY COMMISSION

CERTIFICATE OF COMPLIANCE		NRCC-ELC-E
Project Name: Parlier HS Stadium Replacement - Building M	**Report Page:**	**(Page 4 of 6)**
	Date Prepared:	5/4/2026

G. SEPARATION OF ELECTRICAL CIRCUITS FOR ENERGY MONITORING

This table includes entirely new or complete replacement electrical power distribution systems to demonstrate compliance with §130.5(b)/§160.6(b). Any load types that are not included in the service do not need to be shown. For multifamily occupancies, submetered systems that provide power to dwelling units do not need to meet these separation requirements and therefore load types on those submetered systems also do not need to be shown.

01	02	03	04	05	
Load Type per Table 130.5-B [1]	Minimum Required Separation of Load per Table 130.5-B	Compliance Method[2]	Location of Requirements in Construction Documents	Field Inspector	
				Pass	Fail
Renewable power sources (net or total)	Each group	Method 2: Switchboards/ motor control centers/ panelboard supply other distribution equipment with loads disaggregated for each load type	EX1.1	☐	☐

** NOTES: If "Other*" is selected under Compliance Method above, please indicate how compliance has been achieved in the space provided below.*

[1] *FOOTNOTES: For each separate load type, up to 10% of the connected load may be of any type.*
[2] *Method 1: Switchboards/ motor control centers/ panelboard loads disaggregated for each load type.*
Method 2: Switchboards/ motor control centers/ panelboard supply other distribution equipment with loads disaggregated for each load type.
Method 3: Branch circuits serve load types individually and provisions for adding future branch circuit monitoring.
Method 4: Complete metering system measures and reports loads by type.
See Chapter 8 of the Nonresidential Compliance Manual for more detail on Compliance Methods.

H. VOLTAGE DROP

This table includes entirely new or complete replacement electrical power distribution systems, or alterations that add, modify or replace both feeders and branch circuits to demonstrate compliance with §130.5(c)/ §160.6(c). For alterations, only the altered circuits must demonstrate compliance per §141.0(b)2Piii/ §180.2(b)4bvii.c.

01	02			03	04	05	
Electrical Service Designation/Description	Combined Voltage Drop on Installed Feeder/Branch Circuit Conductors Compliance Method			Location of Voltage Drop Calculations[1]	Sheet Number for Voltage Drop Calculations in Construction Documents	Field Inspector	
						Pass	Fail
MSB	☒	Voltage drop less than 5%	☐	Permitted by CA Elec Code (Exception to 130.5(c))*	In construction documents	EX1.1	☐	☐

STATE OF CALIFORNIA
Indoor Lighting
CALIFORNIA ENERGY COMMISSION

CERTIFICATE OF COMPLIANCE		NRCC-LTI-E
This document is used to demonstrate compliance with requirements in §110.9, §110.12(c), §130.0, §130.1, §140.6 and §141.0(b)2 for indoor lighting scopes using the prescriptive path for nonresidential and hotel/motel occupancies. It is also used to document compliance with requirements in §160.5, §170.2(e) and §180.2(b)4 for indoor lighting scopes using the prescriptive path for multifamily occupancies. Multifamily includes dormitory and senior living facilities.		
Project Name: Parlier HS Stadium Replacement - Building M	**Report Page:**	**(Page 1 of 7)**
Project Address: 603 3rd Street	**Date Prepared:**	5/4/2026

A. GENERAL INFORMATION

01	Project Location (city)	Parlier	04	Total Conditioned Floor Area (ft²)	1,520
02	Climate Zone	13	05	Total Unconditioned Floor Area (ft²)	0
03	Occupancy Types Within Project (select all that apply):		06	# of Stories (Habitable Above Grade)	1

● Retail ● Support Areas ● All Other Occupancies

B. PROJECT SCOPE

This table includes any lighting systems that are within the scope of the permit application and are demonstrating compliance using the prescriptive path outlined in §140.6 / §170.2(e) or §141.0(b)2 / §180.2(b)4 for alterations.

Scope of Work	Conditioned Spaces		Unconditioned Spaces	
01	02	03	04	05
My Project Consists of (check all that apply):	Calculation Method	Area (ft²)	Calculation Method	Area (ft²)
☒ New Lighting System	Area Category Method	1520	Area Category Method	0
☐ New Lighting System - Parking Garage				
Total Area of Work (ft²)	1520		0	

STATE OF CALIFORNIA
Indoor Lighting
CALIFORNIA ENERGY COMMISSION

CERTIFICATE OF COMPLIANCE		NRCC-LTI-E
Project Name: Parlier HS Stadium Replacement - Building M	**Report Page:**	**(Page 2 of 7)**
	Date Prepared:	5/4/2026

C. COMPLIANCE RESULTS

If any cell on this table says "DOES NOT COMPLY" or "COMPLIES with Exceptional Conditions" refer to Table D. for guidance.

Lighting in conditioned and unconditioned spaces must not be combined for compliance per §140.6(b)1 /§170.2(e)	Allowed Lighting Power per §140.6(b) /§170.2(e) (Watts)					Adjusted Lighting Power per §140.6(a) /§170.2(e) (Watts)				Compliance Results
	01	02	03		04	05	06		07	08
	Complete Building §140.6(c)1	Area Category §140.6(c)2 /§170.2(e)4	Area Category Additional §140.6(c)2G / §170.2(e)4Av (+)	=	Total Allowed (Watts)	Total Designed (Watts)	Adjustments PAF Lighting Control Credits §140.6(a)2 /§170.2(e)1B (-)	=	Total Adjusted (Watts) *Includes Adjustments	05 must be >= 08 §140.6 /§170.2(e)
	(See Table I)	(See Table I)	(See Table J)			(See Table F)	(See Table P)			
Conditioned		1,051.4	0	=	1,051	≥ 612	0	=	612	COMPLIES
Unconditioned				=		≥		=		
Controls Compliance (See Table H for Details)										COMPLIES
One-for-one Luminaire Alterations Compliance (See Table Q for Details)										

D. EXCEPTIONAL CONDITIONS

This table is auto-filled with uneditable comments because of selections made or data entered in tables throughout the form.

E. ADDITIONAL REMARKS

This table includes remarks made by the permit applicant to the Authority Having Jurisdiction.

STATE OF CALIFORNIA
Indoor Lighting
CALIFORNIA ENERGY COMMISSION

CERTIFICATE OF COMPLIANCE		NRCC-LTI-E
Project Name: Parlier HS Stadium Replacement - Building M	**Report Page:**	**(Page 3 of 7)**
	Date Prepared:	5/4/2026

F. INDOOR LIGHTING FIXTURE SCHEDULE

This table includes all planned permanent and portable lighting other than dwelling unit/ hotel/ motel room lighting. Multifamily dwelling unit and hotel/motel room lighting is documented in Table T. If using Table T to document lighting in multifamily common use areas providing shared provisions for living, eating, cooking or sanitation, those luminaires are not included here.

Designed Wattage: Conditioned Spaces

01	02	03	04	05	06	07	08	09	10	
Name or Item Tag	Complete Luminaire Description	Modular (Track) Fixture	Small Aperture & Color Change [1]	Watts per luminaire[2]	How is Wattage determined	Total Number of Luminaires	Excluded per §140.6(a)3 / §170.2(e)2C	Design Watts	Field Inspector	
									Pass	Fail
A/AE/AS	36.7w 2x4 Troffer	No	NA	36.7	Mfr. Spec	4	No	146.8	☐	☐
A1	15.6w 2x2 Troffer	No	NA	15.6	Mfr. Spec	1	No	15.6	☐	☐
B/BE	26.6w Surface Mounted LED	No	NA	26.6	Mfr. Spec	4	No	106.4	☐	☐
C	10.4w Recessed Downlight	No	NA	10.4	Mfr. Spec	33	No	343.2	☐	☐
						Total Designed Watts: CONDITIONED SPACES		612		

[1] *FOOTNOTE: Design Watts for small aperture and color changing luminaires which qualify per §140.6(a)4B /§170.2(e)2D is adjusted to be 75% /80% of their rated wattage. Table T automatically makes this adjustment, the permit applicant should enter full rated wattage in column 05.*

[2] *Authority Having Jurisdiction may ask for Luminaire cut sheets to confirm wattage used for compliance per §130.0(c) /§160.5(b). Wattage used must be the maximum rated for the luminaire, not the lamp.*

G. MODULAR LIGHTING SYSTEMS

This section does not apply to this project.

H. INDOOR LIGHTING CONTROLS (Not including PAFs)

This table includes lighting controls for conditioned and unconditioned spaces.

Building Level Controls

01	02	03	
		Field Inspector	
		Pass	Fail
Mandatory Demand Response §110.12(c)	Shut-off controls §130.1(c) / §160.5(b)4C		
NA < 4,000W subject to multilevel	Whole Building Auto Time Switch	☐	☐

STATE OF CALIFORNIA
Indoor Lighting
CALIFORNIA ENERGY COMMISSION

CERTIFICATE OF COMPLIANCE		NRCC-LTI-E
Project Name: Parlier HS Stadium Replacement - Building M	**Report Page:**	**(Page 4 of 7)**
	Date Prepared:	5/4/2026

H. INDOOR LIGHTING CONTROLS (Not including PAFs)

Area Level Controls

04	05	06	07	08	09	10	11	12	
Area Description	Complete Building or Area Category Primary Function Area	Manual Controls §130.1(a) /§160.5(b)4A	Multi-Level Controls §130.1(b) /§160.5(b)4B	Shut-Off Controls §130.1(c) //§160.5(b)4C	Primary/Sky lit Daylighting §130.1(d) /§160.5(b)4D	Secondary Daylighting §130.1(d) /§160.5(b)4D	Interlocked Systems §140.6(e)1/ §170.2(e)2A	Field Inspector	
								Pass	Fail
Restroom	All Other Space Types	Auth. Personnel	NA: Restrooms	Occupancy Sensor	NA: Rm < 24sf Glazing	NA: Rm < 24sf Glazing	No	☐	☐
Ticket Booth	All Other Space Types	Readily Accessible and located in the same space.	NA: Space <100SF	Occupancy Sensor	NA: Rm < 24sf Glazing	NA: Rm < 24sf Glazing	No	☐	☐
Storage	All Other Space Types	Readily Accessible and located in the same space.	Dimmer	NA: Elec. equip. rm	NA: Rm < 24sf Glazing	NA: Rm < 24sf Glazing	No	☐	☐
								13	
								Plan Sheet Showing Daylit Zones:	
								EM1.0	

I. LIGHTING POWER ALLOWANCE: COMPLETE BUILDING OR AREA CATEGORY METHODS

Each area complying using the Complete Building or Area Category Methods per §140.6(b) are included in this table. Column 06 indicates if additional lighting power allowances per §140.6(c) or adjustments per §140.6(a) are being used .

Conditioned Spaces

01	02	03	04	05	06	
Area Description	Complete Building or Area Category Primary Function Area	Allowed Density (W/ft²)	Area (ft²)	Allowed Wattage (Watts)	Additional Allowance / Adjustment	
					Area Category/PAF	PAF
Restrooms	Restroom	0.65	1,219	792.4	No	No

STATE OF CALIFORNIA
Indoor Lighting
CALIFORNIA ENERGY COMMISSION

CERTIFICATE OF COMPLIANCE		NRCC-LTI-E
Project Name: Parlier HS Stadium Replacement - Building M	**Report Page:**	**(Page 5 of 7)**
	Date Prepared:	5/4/2026

I. LIGHTING POWER ALLOWANCE: COMPLETE BUILDING OR AREA CATEGORY METHODS

Ticket Booth	Retail Merchandise Sales	0.95	252	239.4	No	No
Storage	Electrical, Mechanical, or Telephone Room	0.4	49	19.6	No	No
		TOTALS:	1,520	1,051.4	See Tables J, or P for detail	

J. ADDITIONAL ALLOWANCE: AREA CATEGORY METHOD QUALIFYING LIGHTING SYSTEM

This section does not apply to this project.

P. POWER ADJUSTMENT: LIGHTING CONTROL CREDIT (POWER ADJUSTMENT FACTOR (PAF))

This section does not apply to this project.

Q. ONE-FOR-ONE LUMINAIRE ALTERATIONS

This section does not apply to this project.

R. 80% LIGHTING POWER FOR ALL ALTERATIONS - CONTROLS EXCEPTIONS

This section does not apply to this project.

S. DAYLIGHT DESIGN POWER ADJUSTMENT FACTOR (PAF)

This section does not apply to this project.

T. DWELLING UNIT LIGHTING

This section does not apply to this project.

STATE OF CALIFORNIA
Indoor Lighting
CALIFORNIA ENERGY COMMISSION

CERTIFICATE OF COMPLIANCE		NRCC-LTI-E
Project Name: Parlier HS Stadium Replacement - Building M	**Report Page:**	**(Page 6 of 7)**
	Date Prepared:	5/4/2026

U. DECLARATION OF REQUIRED CERTIFICATES OF INSTALLATION

Selections have been made based on information provided in this document. If any selections have been changed by permit applicant, an explanation should be included in Table E. Additional Remarks. These documents must be provided to the building inspector during construction and can be found online

Form/Title
NRCI-LTI-E - Must be submitted for all buildings

V. DECLARATION OF REQUIRED CERTIFICATES OF ACCEPTANCE

Selections have been made based on information provided in this document. If any selections have been changed by the permit applicant, an explanation should be included in Table E. Additional Remarks. These documents must be provided to the building inspector during construction and any with "-A" in the form name must be completed through an Acceptance Test Technician Certification Provider (ATTCP). For more information visit: http://www.energy.ca.gov/title24/attcp/providers.html

Form/Title	Systems/Spaces To Be Field Verified
NRCA-LTI-02-A - Must be submitted for occupancy sensors and automatic time switch controls.	Whole Building Time Switch; Restroom; Ticket Booth;

STATE OF CALIFORNIA
Electrical Power Distribution
CALIFORNIA ENERGY COMMISSION

CERTIFICATE OF COMPLIANCE		NRCC-ELC-E
Project Name: Parlier HS Stadium Replacement - Building M	**Report Page:**	**(Page 6 of 6)**
Project Address: 603 3rd Street	**Date Prepared:**	5/4/2026

DOCUMENTATION AUTHOR'S DECLARATION STATEMENT

I certify that this Certificate of Compliance documentation is accurate and complete.

Documentation Author Name: Richard J. Hardin	Documentation Author Signature:
Company: Hardin-Davidson Engineering	Signature Date: 2026-05-04
Address: 356 Pollasky Ave., Suite 200	CEA/AEA/ECC Certification Identification (if applicable): E9125
City/State/Zip: Clovis CA 93612	Phone: 559-323-4995

RESPONSIBLE PERSON'S DECLARATION STATEMENT

I certify the following under penalty of perjury, under the laws of the State of California:

1. The information provided on this Certificate of Compliance is true and correct.
2. I am eligible under Division 3 of the Business and Professions Code to accept responsibility for the building design or system design identified on this Certificate of Compliance (responsible designer)
3. The energy features and performance specifications, materials, components, and manufactured devices for the building design or system design identified on this Certificate of Compliance conform to the requirements of Title 24, Part 1 and Part 6 of the California Code of Regulations.
4. The building design features or system design features identified on this Certificate of Compliance are consistent with the information provided on other applicable compliance documents, worksheets, calculations, plans and specifications submitted to the enforcement agency for approval with this building permit application.
5. I will ensure that a completed signed copy of this Certificate of Compliance shall be made available with the building permit(s) issued for the building, and made available to the enforcement agency for all applicable inspections. I understand that a completed signed copy of this Certificate of Compliance is required to be included with the documentation the builder provides to the building owner at occupancy.

Responsible Person Name: Richard J. Hardin	Responsible Person Signature:
Responsible Person Scope:	
Company: Hardin-Davidson Engineering	Date Signed: 2026-05-04
Address: 356 Pollasky Ave, Suite 200	License: E9125
City/State/Zip: Clovis CA 93612	Phone: 559-323-4995

STATE OF CALIFORNIA
Indoor Lighting
CALIFORNIA ENERGY COMMISSION

CERTIFICATE OF COMPLIANCE		NRCC-LTI-E
Project Name: Parlier HS Stadium Replacement - Building M	**Report Page:**	**(Page 7 of 7)**
	Date Prepared:	5/4/2026

U. DECLARATION OF REQUIRED CERTIFICATES OF INSTALLATION

Selections have been made based on information provided in this document. If any selections have been changed by permit applicant, an explanation should be included in Table E. Additional Remarks. These documents must be provided to the building inspector during construction and can be found online

Form/Title
NRCI-LTI-E - Must be submitted for all buildings

V. DECLARATION OF REQUIRED CERTIFICATES OF ACCEPTANCE

Selections have been made based on information provided in this document. If any selections have been changed by the permit applicant, an explanation should be included in Table E. Additional Remarks. These documents must be provided to the building inspector during construction and any with "-A" in the form name must be completed through an Acceptance Test Technician Certification Provider (ATTCP). For more information visit: http://www.energy.ca.gov/title24/attcp/providers.html

Form/Title	Systems/Spaces To Be Field Verified
NRCA-LTI-02-A - Must be submitted for occupancy sensors and automatic time switch controls.	Whole Building Time Switch; Restroom; Ticket Booth;

PBK
www.pbk.com
559-448-8400
FRESNO, CA

PARLIER HS STADIUM REPLACEMENT
603 3rd Street
Parlier CA 93648

CLIENT PROJECT NO.: 250093
DSA SUBMISSION
DSA APPL. NO. : 02-124002 DSA FILE NO. : 10-H12

PARLIER UNIFIED SCHOOL DISTRICT

REGISTERED PROFESSIONAL ENGINEER R.J. HARDIN No. E9125 ELECTRICAL STATE OF CALIFORNIA

CLIENT
PARLIER UNIFIED SCHOOL DISTRICT

DATE	PROJECT NUMBER
YYYY/MM/DD	250093

DRAWING HISTORY

No.	Description	Date
1	RFI #003	06/03/2026
2	ADDENDUM #3	06/08/2026
3	ADDENDUM #4	06/12/2026

CHECKED BY: HDE
DRAWN BY: HDE

BUILDING M - T24 COMPLIANCE FORMS

EX3.0

Plot Stamp:
6/22/2026 9:21:06 AM

0"
1"

BUILDING M - T24 COMPLIANCE FORMS
EX3.1
FOR BLUEBEAM LABELING/OCR:

STATE OF CALIFORNIA
Indoor Lighting
CALIFORNIA ENERGY COMMISSION

CERTIFICATE OF COMPLIANCE		NRCC-LTI-E
Project Name: Parlier HS Stadium Replacement - Building M	**Report Page:**	**(Page 7 of 7)**
Project Address: 603 3rd Street	**Date Prepared:**	5/4/2026

DOCUMENTATION AUTHOR'S DECLARATION STATEMENT

I certify that this Certificate of Compliance documentation is accurate and complete.

Documentation Author Name:	Documentation Author Signature:
Richard J. Hardin	
Company: Hardin-Davidson Engineering	Signature Date: 2026-05-04
Address: 356 Pollasky Ave., Suite 200	CEA/AEA/ECC Certification Identification (if applicable): E9125
City/State/Zip: Clovis CA 93612	Phone: 559-323-4995

RESPONSIBLE PERSON'S DECLARATION STATEMENT

I certify the following under penalty of perjury, under the laws of the State of California:
1. The information provided on this Certificate of Compliance is true and correct.
2. I am eligible under Division 3 of the Business and Professions Code to accept responsibility for the building design or system design identified on this Certificate of Compliance (responsible designer)
3. The energy features and performance specifications, materials, components, and manufactured devices for the building design or system design identified on this Certificate of Compliance conform to the requirements of Title 24, Part 1 and Part 6 of the California Code of Regulations.
4. The building design features or system design features identified on this Certificate of Compliance are consistent with the information provided on other applicable compliance documents, worksheets, calculations, plans and specifications submitted to the enforcement agency for approval with this building permit application.
5. I will ensure that a completed signed copy of this Certificate of Compliance is required to be included with the documentation the builder provides to the building owner at occupancy.

Responsible Person Name:	Responsible Person Signature:
Richard J. Hardin	
Responsible Person Scope:	
Company: Hardin-Davidson Engineering	Date Signed: 2026-05-04
Address: 356 Pollasky Ave, Suite 200	License: E9125
City/State/Zip: Clovis CA 93612	Phone: 559-323-4995

STATE OF CALIFORNIA
Outdoor Lighting
CALIFORNIA ENERGY COMMISSION

CERTIFICATE OF COMPLIANCE		NRCC-LTO-E
This document is used to demonstrate compliance with requirements in §110.9, §130.0, §130.2, §140.7, and §141.0(b)2I, for outdoor lighting scopes using the prescriptive path for nonresidential and hotel/motel occupancies. It is also used to document compliance with requirements in §160.5, §170.2(e)6, §180.1(a) and §180.2(b)4Bv for outdoor lighting scopes using the prescriptive path for multifamily and mixed-use occupancies. Multifamily includes dormitory and senior living facilities.		
Project Name: Parlier HS Stadium Replacement - Building M	**Report Page:**	**(Page 1 of 8)**
Project Address: 603 3rd Street	**Date Prepared:**	5/4/2026

A. GENERAL INFORMATION

01	Project Location (city)	Parlier	04	Total Illuminated Hardscape Area (ft²)	144058
02	Climate Zone	13			
03	Outdoor Lighting Zone per Title 24 Part 1 §10.114 or as designated by Authority Having Jurisdiction (AHJ):				
☐	LZ-0: Very Low - Undeveloped Parkland	☒ LZ-2: Moderate - Urban Clusters	☐ LZ-4: High - Must be reviewed by CA Energy Commission for Approval		
☐	LZ-1: Low - Rural Areas	☐ LZ-3: Moderately High - Urban Areas			
05	Occupancy Types within Project				

● Retail ● Support Areas ● All Other Occupancies

B. PROJECT SCOPE

This table includes outdoor lighting systems that are within the scope of the permit application and are demonstrating compliance using the prescriptive path outlined in §140.7 / §170.2(e)6-or §141.0(b)2I. / § 180.2(b)4Bv for alterations.

My Project Consists of:

01	02	
☒ New Lighting System	Must Comply with Allowances from §140.7 / §170.2(e)6	
☐ Altered Lighting System	Is your alteration increasing the connected lighting load (Watts)?	○ Yes ○ No

03	04	05
% of Existing Luminaires Being Altered[1]	Sum Total of Luminaires Being Added or Altered	Calculation Method
☐ < 10% ☐ >= 10% and < 50% ☐ >= 50%		

Please proceed to Table F, Outdoor Lighting Fixture Schedule to define the project's luminaires.

[1] FOOTNOTES: % of Existing Luminaires Being Altered = (Sum Total of Luminaires Being Added or Altered / Existing Luminaires within the Scope of the Permit Application) x 100.

STATE OF CALIFORNIA
Indoor Lighting
CALIFORNIA ENERGY COMMISSION

CERTIFICATE OF COMPLIANCE		NRCC-LTI-E
Project Name: Parlier HS Stadium Replacement - Building M	**Report Page:**	**(Page 2 of 8)**
	Date Prepared:	5/4/2026

C. COMPLIANCE RESULTS

Results in this table are automatically calculated from data input and calculations in Tables F through N. Note: if any cell on this table says "COMPLIES with Exceptional Conditions" refer to Table D. Exceptional Conditions for guidance or see applicable Table referenced below.

Calculations of Total Allowed Lighting Power (Watts) §140.7 / §170.2(e)6 or §141.0(b)2L / § 180.2(b)4Bv														Compliance Results		
01		02		03		04		05		OR	06		07		08	09
General Hardscape Allowance §140.7(d)1 / §170.2(e)6 (See Table I)	+	Per Application §140.7(d)2 / §170.2(e)6 (See Table J)	+	Sales Frontage §140.7(d)2 (See Table K)	+	Ornamental §170.2(e)6 (See Table L)	+	Per Specific Area §140.7(d)2 / §170.2(e)6 (See Table M)	OR	Existing Power Allowance §141.0(b)2L / § 180.2(b)4Bv (See Table N)	=	**Total Allowed** (Watts)	≥	**Total Actual** (Watts)	**07 must be >= 08**
3,289	+	---	+	---	+	---	+	---	OR	---	=	3,289	≥	2,440	COMPLIES
Shielding Compliance (See Table G for Details)																N/A
Controls Compliance (See Table H for Details)																COMPLIES

D. EXCEPTIONAL CONDITIONS

This table is auto-filled with uneditable comments because of selections made or data entered in tables throughout the form.

E. ADDITIONAL REMARKS

This table includes remarks made by the permit applicant to the Authority Having Jurisdiction.

STATE OF CALIFORNIA
Outdoor Lighting
CALIFORNIA ENERGY COMMISSION

CERTIFICATE OF COMPLIANCE		NRCC-LTO-E
Project Name: Parlier HS Stadium Replacement - Building M	**Report Page:**	**(Page 3 of 8)**
	Date Prepared:	5/4/2026

F. OUTDOOR LIGHTING FIXTURE SCHEDULE

For new or altered lighting systems demonstrating compliance with §140.7 / §170.2(e)6 all new luminaires being installed and any existing luminaires remaining or being moved within the spaces covered by the permit application are included in the Table below. For altered lighting systems using the Existing Power method per §141.0(b)2L only new luminaires being installed and replacement luminaires being installed as part of the project scope are included (ie, existing luminaires remaining or existing luminaires being moved are not included). Outdoor lighting attached to multifamily buildings and controlled from the inside of a dwelling unit are included in Table H. and are not included here. All other multifamily outdoor lighting is included here.

Designed Wattage:

01	02		03	04	05	06	07	08	09	10	
Name or Item Tag	Complete Luminaire Description		Watts per luminaire[1, 2]	How is Wattage determined	Total Number Luminaires [2]	Luminaire Status[3]	Excluded per §140.7(a) / §170.2(e)6A	Design Watts	Cutoff Req. > 6,200 initial lumen output §130.2(b) /§160.5(c)1.[4]	Field Inspector	
										Pass	Fail
M	14w Canopy LED	☐ Linear	14	Mfr. Spec	10	New	☐	140	NA: < 6200 lumens	☐	☐
N/NE	19w Wall Pack	☐ Linear	19	Mfr. Spec	5	New	☐	95	NA: < 6200 lumens	☐	☐
P1	45w 14' Single-Head Pole	☐ Linear	45	Mfr. Spec	4	New	☐	180	NA: < 6200 lumens	☐	☐
P2	90w 14' Double-Head Pole	☐ Linear	90	Mfr. Spec	12	New	☐	1,080	NA: < 6200 lumens	☐	☐
S1	14w In-Grade LED	☐ Linear	14	Mfr. Spec	8	New	☐	112	NA: < 6200 lumens	☐	☐
SBL	35w Illuminated Bollard	☐ Linear	35	Mfr. Spec	13	New	☐	455	NA: < 6200 lumens	☐	☐
SF	14w In-Grade LED	☐ Linear	14	Mfr. Spec	2	New	☐	28	NA: < 6200 lumens	☐	☐
SG	35w In-Grade LED	☐ Linear	35	Mfr. Spec	10	New	☐	350	NA: < 6200 lumens	☐	☐
								Total Design Watts:	2440		

* NOTES: Selections with a * require a note in the space below explaining how compliance is achieved.
EX: Luminaire is lighting a statue; EXCEPTION 2 to §130.2(b)

STATE OF CALIFORNIA
Outdoor Lighting
CALIFORNIA ENERGY COMMISSION

CERTIFICATE OF COMPLIANCE		NRCC-LTO-E
Project Name: Parlier HS Stadium Replacement - Building M	**Report Page:**	**(Page 4 of 8)**
	Date Prepared:	5/4/2026

F. OUTDOOR LIGHTING FIXTURE SCHEDULE

For new or altered lighting systems demonstrating compliance with §140.7 / §170.2(e)6 all new luminaires being installed and any existing luminaires remaining or being moved within the spaces covered by the permit application are included in the Table below. For altered lighting systems using the Existing Power method per §141.0(b)2L only new luminaires being installed and replacement luminaires being installed as part of the project scope are included (ie, existing luminaires remaining or existing luminaires being moved are not included). Outdoor lighting attached to multifamily buildings and controlled from the inside of a dwelling unit are included in Table H. and are not included here. All other multifamily outdoor lighting is included here.

Designed Wattage:

01	02	03	04	05	06	07	08	09	10

[1] FOOTNOTES: Authority Having Jurisdiction may ask for Luminaire cut sheets to confirm wattage used for compliance per §130.0(c) / §160.5(b)
[2] For linear luminaires, wattage should be indicated as W/lf instead of Watts/luminaire. Total linear feet should be indicated in column 05 instead of number of luminaires.
[3] Select "New" for new luminaires in a new outdoor lighting project, or for added luminaires in an alteration. Select "Altered" for replacement luminaires in an alteration. Select "Existing to Remain" for existing luminaires within the project scope that are not being altered and are remaining. Select "Existing Reinstalled" for existing luminaires which are being removed and reinstalled as part of the project scope.
[4] Compliance with mandatory shielding requirements is required for luminaires with initial lumen output >= 6,200 unless exempted by §130.2(b)/ §160.5(c)

G. SHIELDING REQUIREMENTS (BUG)

This section does not apply to this project.

STATE OF CALIFORNIA
Outdoor Lighting
CALIFORNIA ENERGY COMMISSION

CERTIFICATE OF COMPLIANCE		NRCC-LTO-E
Project Name: Parlier HS Stadium Replacement - Building M	**Report Page:**	**(Page 5 of 8)**
	Date Prepared:	5/4/2026

H. OUTDOOR LIGHTING CONTROLS

This table demonstrates compliance with controls requirements for all new or altered luminaires installed as part of the permit application. For alteration projects, luminaires which are existing to remain (ie untouched) and luminaires which are removed and reinstalled (wiring only) do not need to be included in this table even if they are within the spaces covered by the permit application.
Outdoor lighting for nonresidential buildings, parking garages and common service areas in multifamily buildings must be documented separately from outdoor lighting attached to multifamily buildings and controlled from the inside of a dwelling unit

Mandatory Controls for Nonresidential Occupancies, Parking Garages & Common Areas in Multifamily Buildings

01	02	03	04	05	
Area Description	Shut-Off §130.2(c)1 / §160.5(c)	Auto-Schedule §130.2(c)2 / §160.5(c)	Motion Sensor §130.2(c)3 / §160.5(c)	Field Inspector	
				Pass	Fail
Exterior Lighting	Astronomical Timer	Provided	NA: Each Luminaire <= 40 Watts	☐	☐
Exterior Lighting >40W	Astronomical Timer	Provided	Provided	☐	☐

[1] FOOTNOTE: Text has been abbreviated, please refer to Table 160.5-A to confirm compliance with the specific light source technologies listed.
[2] Authority having jurisdiction may ask for cutsheets or other documentation to confirm compliance of light source.
[3] Recessed luminaires marked for use in fire-rated installations, and recessed luminaires installed in non-insulated ceilings are excepted from ii and iii.

STATE OF CALIFORNIA
Outdoor Lighting
CALIFORNIA ENERGY COMMISSION

CERTIFICATE OF COMPLIANCE		NRCC-LTO-E
Project Name: Parlier HS Stadium Replacement - Building M	**Report Page:**	**(Page 6 of 8)**
	Date Prepared:	5/4/2026

I. LIGHTING POWER ALLOWANCE (per §140.7 /§170.2(e))

This table includes areas using allowance calculations per §140.7 /§170.2(e). General Hardscape Allowance is per Table 140.7-A/Table 170.2-R while "Use it or lose it" Allowances are per Table 140.7-B /Table 170.2-S. Indicate which allowances are being used to expand sections for user input. Luminaires that qualify for one of the "Use it or lose it" allowances shall not qualify for another "Use it or lose it" allowance. Outdoor lighting attached to multifamily buildings and controlled from the inside of a dwelling unit are included in Table H. and are not included here. All other multifamily outdoor lighting is included here.

	01				
	"Use it or lose it" Allowance (select all that apply) (select all that apply)				
	☒ General Hardscape Allowance Table I (below)	☐ Per Application Table J	☐ Sales Frontage Table K	☐ Ornamental Table L	☐ Per Specific Area Table M

Calculated General Hardscape Lighting Power Allowance per Table 140.7-A for Nonresidential & Hotel/Motel

02	03	04	05	06	07	08	09
Area Description	Area Wattage Allowance (AWA)			Linear Wattage Allowance (LWA)			Total General AWA + LWA (Watts)
	Illuminated Area (ft²)	Allowed Density (W/ft²)	Area Allowance (Watts)	Perimeter Length (lf)	Allowed Density (W/lf)	Linear Allowance (Watts)	
Exterior Lighting	4282	0.019	81.4	339	0.2	50.8	132
Site	139776	0.019	2655.7	2008	0.2	301.2	2957
					Initial Wattage Allowance for Entire Site (Watts):		200
					Instances of Initial Wattage Allowance (LZ 0 only)[1]		
					Total General Hardscape Allowance (Watts):		3289

J. LIGHTING ALLOWANCE: PER APPLICATION

This section does not apply to this project.

K. LIGHTING ALLOWANCE: SALES FRONTAGE

This section does not apply to this project.

L. LIGHTING ALLOWANCE: ORNAMENTAL

This section does not apply to this project.

STATE OF CALIFORNIA
Outdoor Lighting
CALIFORNIA ENERGY COMMISSION

CERTIFICATE OF COMPLIANCE		NRCC-LTO-E
Project Name: Parlier HS Stadium Replacement - Building M	**Report Page:**	**(Page 7 of 8)**
	Date Prepared:	5/4/2026

M. LIGHTING ALLOWANCE: PER SPECIFIC AREA

This section does not apply to this project.

N. EXISTING CONDITIONS POWER ALLOWANCE (alterations only)

This section does not apply to this project.

O. DECLARATION OF REQUIRED CERTIFICATES OF INSTALLATION

Selections have been made based on information provided in this document. If any selection has been changed by permit applicant, an explanation should be included in Table E. Additional Remarks. These documents must be provided to the building inspector during construction and can be found online

Form/Title
NRCI-LTO-E - Must be submitted for all buildings

P. DECLARATION OF REQUIRED CERTIFICATES OF ACCEPTANCE

Selections have been made based on information provided in this document. If any selection has been changed by permit applicant, an explanation should be included in Table E. Additional Remarks. These documents must be provided to the building inspector during construction and must be completed through an Acceptance Test Technician Certification Provider (ATTCP). For more information visit: http://www.energy.ca.gov/title24/attcp/providers.html

Form/Title	Systems/Spaces To Be Field Verified
NRCA-LTO-02-A - Must be submitted for all outdoor lighting controls except for alterations where controls are added to <= 20 luminaires.	Exterior Lighting; Exterior Lighting >40W;

STATE OF CALIFORNIA
Outdoor Lighting
CALIFORNIA ENERGY COMMISSION

CERTIFICATE OF COMPLIANCE		NRCC-LTO-E
Project Name: Parlier HS Stadium Replacement - Building M	**Report Page:**	**(Page 8 of 8)**
Project Address: 603 3rd Street	**Date Prepared:**	5/4/2026

DOCUMENTATION AUTHOR'S DECLARATION STATEMENT

I certify that this Certificate of Compliance documentation is accurate and complete.

Documentation Author Name:	Documentation Author Signature:
Richard J. Hardin	
Company: Hardin-Davidson Engineering	Signature Date: 2026-05-04
Address: 356 Pollasky Ave., Suite 200	CEA/AEA/ECC Certification Identification (if applicable): E9125
City/State/Zip: Clovis CA 93612	Phone: 559-323-4995

RESPONSIBLE PERSON'S DECLARATION STATEMENT

I certify the following under penalty of perjury, under the laws of the State of California:
1. The information provided on this Certificate of Compliance is true and correct.
2. I am eligible under Division 3 of the Business and Professions Code to accept responsibility for the building design or system design identified on this Certificate of Compliance (responsible designer)
3. The energy features and performance specifications, materials, components, and manufactured devices for the building design or system design identified on this Certificate of Compliance conform to the requirements of Title 24, Part 1 and Part 6 of the California Code of Regulations.
4. The building design features or system design features identified on this Certificate of Compliance are consistent with the information provided on other applicable compliance documents, worksheets, calculations, plans and specifications submitted to the enforcement agency for approval with this building permit application.
5. I will ensure that a completed signed copy of this Certificate of Compliance shall be made available with the building permit(s) issued for the building, and made available to the enforcement agency for all applicable inspections. I understand that a completed signed copy of this Certificate of Compliance is required to be included with the documentation the builder provides to the building owner at occupancy.

Responsible Person Name:	Responsible Person Signature:
Richard J. Hardin	
Responsible Person Scope:	
Company: Hardin-Davidson Engineering	Date Signed: 2026-05-04
Address: 356 Pollasky Ave, Suite 200	License: E9125
City/State/Zip: Clovis CA 93612	Phone: 559-323-4995

PBK
www.pbk.com
559-448-8400
FRESNO, CA

PARLIER HS STADIUM REPLACEMENT
603 3rd Street
Parlier, CA 93648

CLIENT PROJECT NO: 250093
DSA SUBMISSION
DSA APPL. NO.: 02-124002 DSA FILE NO.: 10-H12

PARLIER UNIFIED SCHOOL DISTRICT

REGISTERED PROFESSIONAL ENGINEER R. J. HARDIN No. 9125 ELECTRICAL STATE OF CALIFORNIA

CLIENT	
PARLIER UNIFIED SCHOOL DISTRICT	
DATE YYYY/MM/DD	PROJECT NUMBER 250093

DRAWING HISTORY

No.	Description	Date
3	RFI #003	06/03/2026
4	ADDENDUM #3	06/08/2026
5	ADDENDUM #4	06/12/2026

CHECKED BY: HDE
DRAWN BY: HDE

BUILDING M - T24 COMPLIANCE FORMS

EX3.1

Plot Stamp:
6/22/2026 9:21:06 AM

STATE OF CALIFORNIA
Solar And Battery CALIFORNIA ENERGY COMMISSION

CERTIFICATE OF COMPLIANCE	NRCC-SAB-E
This document is used to demonstrate compliance with prescriptive PV and battery requirements in §140.10/§170.2 for nonresidential, multifamily and mixed-use buildings and prescriptive solar thermal requirements in §170.2(d)3C for multifamily and hotel/ motel occupancies. When PV/battery/solar thermal requirements don't apply or are traded using the performance approach, this document demonstrates compliance with mandatory solar readiness requirements in §110.10/ §160.8 for newly constructed buildings which are either multifamily ten stories or fewer, hotel/motel ten stories or fewer or all other nonresidential buildings three stories or fewer. It is also used to demonstrate compliance with solar readiness in §110.10/ §160.8 for additions to nonresidential, multifamily or hotel/motel building types which add more than 2,000 ft² of roof area. Alterations, or additions of less than 2,000 ft² of roof area, are not required to comply with solar readiness, solar PV and battery requirements and do not need to complete this document.	
Project Name: Parlier HS Stadium Replacement - Building M	**Report Page:** (Page 1 of 6)
Project Address: 603 3rd Street	**Date Prepared:** 5/4/2026

A. GENERAL INFORMATION					
01	Project Location (city)	Parlier	04	Building Occupancies	All Other OccupanciesRetailSupport Areas
02	Climate Zone	13	05	Construction Type	New construction w/ roof <=533 ft²
03	Square Footage of Building (ft²)	1520	06	Number of Stories	Bldg <= 3 stories

B. PROJECT SCOPE

The compliance path the project is using to comply per §110.10(b)1B/ §140.10/ §170.2(g and h) is indicated below.

Compliance with Solar Photovoltaic (PV) and Battery Requirements in §140.10/ §170.2(g and h)

	01	
☐	Provided PV system and battery storage sized per §140.10/ §170.2 (g and h)	The project has included an installed PV system and battery storage system per requirements in §140.10/ §170.2(g and h) as documented in Table J.
☐	Exception to PV and Battery: Not enough Solar Access Roof Area	The total of all available Solar Access Roof Area(s) of the project site is less than three percent of the conditioned floor area as documented in Table J per Exception 1 to Section 140.10(a) & Exception 1 to Section 170.2(g)..
☒	Exception to PV and Battery: Required PV < 4kW	The required PV system capacity is less than 4 kW dc as documented in Table J per Exception 2 to Section 140.10(a) & Exception 2 to Section 170.2(g).
☐	Exception to PV and Battery: No contiguous Solar Access Roof Area	The Solar Access Roof Area(s) of the project site contains less than 80 contiguous square feet as documented in Table J per Exception 3 to Section 140.10(a) & Exception 3 to Section 170.2(g).
☐	Exception to PV and Battery: Can't meet snow load	The project has a roof design where the enforcement authority has verified it is not possible for the PV system, including panels, modules, components, supports, and attachments to the roof structure, to meet ASCE 7-16 Chapter 7, Snow Loads per Exception 4 to Section 140.10(a) & Exception 4 to 170.2(g).
☐	Exception to PV and Battery: Multifamily without virtual energy credits	The project is a multifamily building in an area where a load serving entity does not provide a program where PV generation is compensated through virtual energy bill credits. Also, there is no community solar program and the utility does not support a virtual energy bill program per exception 5 to 170.2(g).

STATE OF CALIFORNIA
Solar And Battery CALIFORNIA ENERGY COMMISSION

CERTIFICATE OF COMPLIANCE	NRCC-SAB-E
Project Name: Parlier HS Stadium Replacement - Building M	**Report Page:** (Page 2 of 6)
	Date Prepared: 5/4/2026

Compliance with Solar Thermal Water Heating Requirements in §170.2(d)2Bii (Multifamily and hotel/ motel occupancies only)

	01
☐	The project includes a hotel/motel or multifamily occupancy with a gas or propane central water-heating system (serves 2+ dwelling units) and includes a permanently installed domestic solar water-heating system to comply with §170.2(d)2Bii and Reference Residential Appendix RA4, as documented in Table H. Compliance meets Exception 2 to solar ready requirements in §110.10(b).

C. COMPLIANCE RESULTS

Results in this table are automatically calculated from data input and calculations in Tables F through I. Note: If any cell on this table says "DOES NOT COMPLY" or "COMPLIES with Exceptional Conditions" refer to Table D. for guidance or see the applicable Table referenced below.

Allocated Solar Zone				Installed PV System				Installed SWH System				Smart Tstat and Alternative EE Measure		Compliance Results
01		02	OR	03		04	OR	05		06	OR	07	08	
Required Minimum Area (ft²)	<=	Designated Area (ft²)		Required Minimum DC Power Rating (Watts)	<=	Designed DC Power Rating (Watts)		Required Minimum Solar Savings Fraction	<=	Designed/Rated Solar Savings Fraction		JA5 Compliant Thermostat Specified?	Alternative Energy Efficiency Measure	COMPLIES
(See Table F)				(See Tables G or J)				(See Table H)				(See Table I)		
	<=		OR	0	<=	0	OR		<=		OR			
Location in construction documents showing the location for inverters and metering equipment and a pathway for the routing of conduit/ plumbing to the electrical service/ water heating system per §110.10(c).														
Battery storage system design meets the minimum requirements in Joint Appendix JA12 and the minimum energy (kWh)/ power (kW) capacity per Table J.														COMPLIES

D. EXCEPTIONAL CONDITIONS

This table is auto-filled with uneditable comments because of selections made or data entered in tables throughout the form.

E. ADDITIONAL REMARKS

This table is includes remarks made by the permit applicant to the Authority Having Jurisdiction.

STATE OF CALIFORNIA
Solar And Battery CALIFORNIA ENERGY COMMISSION

CERTIFICATE OF COMPLIANCE	NRCC-SAB-E
Project Name: Parlier HS Stadium Replacement - Building M	**Report Page:** (Page 3 of 6)
	Date Prepared: 5/4/2026

F. ALLOCATED SOLAR ZONE

This section does not apply to this project.

G. PERMANENTLY INSTALLED SOLAR PV FOR SOLAR READY EXCEPTION

This section does not apply to this project.

H. PERMANENTLY INSTALLED SOLAR HOT WATER SYSTEMS

This section does not apply to this project.

I. SMART THERMOSTATS AND ALTERNATIVE EFFICIENCY MEASURE FOR SOLAR READY EXCEPTION

This section does not apply to this project.

STATE OF CALIFORNIA
Solar And Battery CALIFORNIA ENERGY COMMISSION

CERTIFICATE OF COMPLIANCE	NRCC-SAB-E
Project Name: Parlier HS Stadium Replacement - Building M	**Report Page:** (Page 4 of 6)
	Date Prepared: 5/4/2026

J. PHOTOVOLTAIC (PV) AND BATTERY ENERGY STORAGE SYSTEMS

This table documents compliance with prescriptive photovoltaic and battery system requirements in §140.10/ §170.2(g and h). Unless the project meets one of the listed exceptions, or trades-off PV in an energy model using performance path, §140.10/ §170.2(g and h) requires installed photovoltaic and battery systems for newly constructed buildings. The installed PV systems must meet the minimum requirements in Joint Appendix 11.

Photovoltaic (PV) System

Equation 140.10-A/170.2-D Calculation Method

01	02	03	04
Building Type	Conditioned Floor Area (ft²)	Tenant Space Exception to §140.10(a)/§170.2(g) (Must check all to meet Exception)	Min Size of PV System Required (kWdc)

SARA Calculation Method

05	06	07	08	09	10	11	12
Roof Name	Roof Slope	Area of New Roof[1] (ft²)	Roof Area < 70% Solar Access[2] (ft²)	Plansheet or Document showing Solar Access Calculations	Roof area occupied, no structural support, not available due to other state codes, < 80 contiguous (ft²)	Solar Access Roof Area (SARA) (ft²)	Min Capacity of PV System Required (kWdc)
					Total Min Size PV System Required for all Spaces (kWdc):		
					Total Size PV System in Design (kWdc):		

[1]FOOTNOTES: Includes the area of the building's roof space capable of structurally supporting a PV system and the area of all roof space on covered parking areas, carports, and all other newly constructed structures on the site that are compatible with supporting a PV system per Title 24, Part 2 Section 1511.2.
[2]Solar access must be determined using CEC approved solar access calculation tools found at https://www.energy.ca.gov/programs-and-topics/programs/building-energy-efficiency-standards/solar-assessment-tools.
[3]As specified by CBC Section 503.1.4.

STATE OF CALIFORNIA
Solar And Battery CALIFORNIA ENERGY COMMISSION

CERTIFICATE OF COMPLIANCE	NRCC-SAB-E
Project Name: Parlier HS Stadium Replacement - Building M	**Report Page:** (Page 5 of 6)
	Date Prepared: 5/4/2026

K. DECLARATION OF REQUIRED CERTIFICATES OF INSTALLATION

Selections have been made based on information provided in this document. If any selections have been changed by the permit applicant, an explanation should be included Table E. Additional Remarks and ExceptionalConditionMessageCCSABE += UserChangedSelectionInCI. These documents must be provided to the building inspector during construction and can be found online

Form/Title
NRCI-SAB-01-E - Must be submitted for all buildings that must comply with solar readiness or PV/Battery requirements.

L. DECLARATION OF REQUIRED CERTIFICATES OF ACCEPTANCE

There are no forms required for this project.

STATE OF CALIFORNIA
Solar And Battery CALIFORNIA ENERGY COMMISSION

CERTIFICATE OF COMPLIANCE	NRCC-SAB-E
Project Name: Parlier HS Stadium Replacement - Building M	**Report Page:** (Page 6 of 6)
Project Address: 603 3rd Street	**Date Prepared:** 5/4/2026

DOCUMENTATION AUTHOR'S DECLARATION STATEMENT

I certify that this Certificate of Compliance documentation is accurate and complete.

Documentation Author Name: Richard J. Hardin	Documentation Author Signature:
Company: Hardin-Davidson Engineering	Signature Date: 2026-05-04
Address: 356 Pollasky Ave., Suite 200	CEA/AEA/ECC Certification Identification (if applicable): E9125
City/State/Zip: Clovis CA 93612	Phone: 559-323-4995

RESPONSIBLE PERSON'S DECLARATION STATEMENT

I certify the following under penalty of perjury, under the laws of the State of California:

1. The information provided on this Certificate of Compliance is true and correct.
2. I am eligible under Division 3 of the Business and Professions Code to accept responsibility for the building design or system design identified on this Certificate of Compliance (responsible designer)
3. The energy features and performance specifications, materials, components, and manufactured devices for the building design or system design identified on this Certificate of Compliance conform to the requirements of Title 24, Part 1 and Part 6 of the California Code of Regulations.
4. The building design features or system design features identified on this Certificate of Compliance are consistent with the information provided on other applicable compliance documents, worksheets, calculations, plans and specifications submitted to the enforcement agency for approval with this building permit application.
5. I will ensure that a completed signed copy of this Certificate of Compliance shall be made available with the building permit(s) issued for the building, and made available to the enforcement agency for all applicable inspections. I understand that a completed signed copy of this Certificate of Compliance is required to be included with the documentation the builder provides to the building owner at occupancy.

Responsible Person Name: Richard J. Hardin	Responsible Person Signature:
Responsible Person Scope:	
Company: Hardin-Davidson Engineering	Date Signed: 2026-05-04
Address: 356 Pollasky Ave., Suite 200	License: E9125
City/State/Zip: Clovis CA 93612	Phone: 559-323-4995

PBK
www.pbk.com
559-448-8400
FRESNO, CA

PARLIER HS STADIUM REPLACEMENT
603 3rd Street
Parlier, CA 93648

CLIENT PROJECT NO: 250093
DSA SUBMISSION
DSA APPL. NO.: 02-124002 DSA FILE NO.: 10-H12

PARLIER UNIFIED SCHOOL DISTRICT

REGISTERED PROFESSIONAL ENGINEER
R.J. HARDIN
NO. 9125
ELECTRICAL
STATE OF CALIFORNIA

CLIENT	
PARLIER UNIFIED SCHOOL DISTRICT	
DATE: YYYY/MM/DD	PROJECT NUMBER: 250093

DRAWING HISTORY

No.	Description	Date
1	RFI #003	06/03/2026
2	ADDENDUM #3	06/08/2026
3	ADDENDUM #4	06/12/2026

CHECKED BY: HDE
DRAWN BY: HDE

BUILDING M - T24 COMPLIANCE FORMS

EX3.2

BUILDING M - T24 COMPLIANCE FORMS
EX3.2
FOR BLUEBEAM LABELING/OCR:

0"
1"

Plot Stamp:
6/22/2026 9:21:06 AM

0"

1"

BUILDING N - T24 COMPLIANCE FORMS
EX3.3
FOR BLUEBEAM LABELING/OCR:

STATE OF CALIFORNIA
Indoor Lighting
CALIFORNIA ENERGY COMMISSION

CERTIFICATE OF COMPLIANCE		NRCC-LTI-E
This document is used to demonstrate compliance with requirements in §110.9, §110.12(c), §130.0, §130.1, §140.6 and §141.0(b)2 for indoor lighting scopes using the prescriptive path for nonresidential and hotel/motel occupancies. It is also used to document compliance with requirements in §160.5, §170.2(e) and §180.2(b)4 for indoor lighting scopes using the prescriptive path for multifamily occupancies. Multifamily includes dormitory and senior living facilities.		
Project Name: Parlier HS Stadium Replacement - Building N	**Report Page:**	**(Page 1 of 7)**
Project Address: 603 3rd Street	**Date Prepared:**	5/15/2026

A. GENERAL INFORMATION

01	Project Location (city)	Parlier	04 Total Conditioned Floor Area (ft²)	3,288
02	Climate Zone	13	05 Total Unconditioned Floor Area (ft²)	0
03	Occupancy Types Within Project (select all that apply):		06 # of Stories (Habitable Above Grade)	1

● Support Areas ● All Other Occupancies

B. PROJECT SCOPE

This table includes any lighting systems that are within the scope of the permit application and are demonstrating compliance using the prescriptive path outlined in §140.6 / §170.2(e) or §141.0(b)2 / §180.2(b)4 for alterations.

Scope of Work	Conditioned Spaces		Unconditioned Spaces	
01	02	03	04	05
My Project Consists of (check all that apply):	Calculation Method	Area (ft²)	Calculation Method	Area (ft²)
☒ New Lighting System	Area Category Method	3288	Area Category Method	0
☐ New Lighting System - Parking Garage				
Total Area of Work (ft²)	3288		0	

STATE OF CALIFORNIA
Indoor Lighting
CALIFORNIA ENERGY COMMISSION

CERTIFICATE OF COMPLIANCE		NRCC-LTI-E
Project Name: Parlier HS Stadium Replacement - Building N	**Report Page:**	**(Page 2 of 7)**
	Date Prepared:	5/15/2026

C. COMPLIANCE RESULTS

If any cell on this table says "DOES NOT COMPLY" or "COMPLIES with Exceptional Conditions" refer to Table D, for guidance.

Lighting in conditioned and unconditioned spaces must not be combined for compliance per §140.6(b)1 /§170.2(e)	Allowed Lighting Power per §140.6(b) /§170.2(e) (Watts)					Adjusted Lighting Power per §140.6(a) /§170.2(e) (Watts)					Compliance Results
	01	02	03		04	05	06		07		08
	Complete Building §140.6(c)1	Area Category §140.6(c)2 /§170.2(e)4	Area Category Additional §140.6(c)2G / §170.2(e)4Av (+)	=	**Total Allowed** (Watts)	Total Designed (Watts)	Adjustments PAF Lighting Control Credits §140.6(a)2 /§170.2(e)1B (-)	=	**Total Adjusted** (Watts) *Includes Adjustments		**05 must be >= 08 §140.6 /§170.2(e)**
	(See Table I)	(See Table I)	(See Table J)			(See Table F)	(See Table P)				
Conditioned		1,997	0	=	1,997	1,517	0	=	1517		COMPLIES
Unconditioned				=				=			
Controls Compliance (See Table H for Details)											COMPLIES
One-for-one Luminaire Alterations Compliance (See Table Q for Details)											

D. EXCEPTIONAL CONDITIONS

This table is auto-filled with uneditable comments because of selections made or data entered in tables throughout the form.

E. ADDITIONAL REMARKS

This table includes remarks made by the permit applicant to the Authority Having Jurisdiction.

STATE OF CALIFORNIA
Indoor Lighting
CALIFORNIA ENERGY COMMISSION

CERTIFICATE OF COMPLIANCE		NRCC-LTI-E
Project Name: Parlier HS Stadium Replacement - Building N	**Report Page:**	**(Page 3 of 7)**
	Date Prepared:	5/15/2026

F. INDOOR LIGHTING FIXTURE SCHEDULE

This table includes all planned permanent and portable lighting other than dwelling unit/ hotel/ motel room lighting. Multifamily dwelling unit and hotel/motel room lighting is documented in Table T. If using Table T to document lighting in multifamily common use areas providing shared provisions for living, eating, cooking or sanitation, those luminaires are not included here.

Designed Wattage: Conditioned Spaces

01	02	03	04	05	06	07	08	09	10	
Name or Item Tag	Complete Luminaire Description	Modular (Track) Fixture	Small Aperture & Color Change [1]	Watts per luminaire[2]	How is Wattage determined	Total Number of Luminaires	Excluded per §140.6(a)3 / §170.2(e)2C	Design Watts	Field Inspector	
									Pass	Fail
A/AE/AS	36.7w 2x4 Troffer	No	NA	36.7	Mfr. Spec	24	No	880.8	☐	☐
B/BE	26.6w Surface Mounted LED	No	NA	26.6	Mfr. Spec	5	No	133	☐	☐
C	10.4w Recessed Downlight	No	NA	10.4	Mfr. Spec	44	No	457.6	☐	☐
D	23w Strip Light	No	NA	23	Mfr. Spec	2	No	46	☐	☐
Total Designed Watts: CONDITIONED SPACES								1,517		

[1] *FOOTNOTE: Design Watts for small aperture and color changing luminaires which qualify per §140.6(a)4B /§170.2(e)2D is adjusted to be 75% /80% of their rated wattage. Table F automatically makes this adjustment, the permit applicant should enter full rated wattage in column D5.*

[2] *Authority Having Jurisdiction may ask for Luminaire cut sheets to confirm wattage used for compliance per §130.0(c) /§160.5(b). Wattage used must be the maximum rated for the luminaire, not the lamp.*

G. MODULAR LIGHTING SYSTEMS

This section does not apply to this project.

H. INDOOR LIGHTING CONTROLS (Not including PAFs)

This table includes lighting controls for conditioned and unconditioned spaces.

Building Level Controls

01	02	03	
		Field Inspector	
		Pass	Fail
Mandatory Demand Response §110.12(c)	Shut-off controls §130.1(c) / §160.5(b)4C		
NA < 4,000W subject to multilevel	Whole Building Auto Time Switch	☐	☐

STATE OF CALIFORNIA
Indoor Lighting
CALIFORNIA ENERGY COMMISSION

CERTIFICATE OF COMPLIANCE		NRCC-LTI-E
Project Name: Parlier HS Stadium Replacement - Building N	**Report Page:**	**(Page 4 of 7)**
	Date Prepared:	5/15/2026

H. INDOOR LIGHTING CONTROLS (Not including PAFs)

Area Level Controls

04	05	06	07	08	09	10	11	12	
Area Description	Complete Building or Area Category Primary Function Area	Manual Controls §130.1(a) /§160.5(b)4A	Multi-Level Controls §130.1(b) /§160.5(b)4B	Shut-Off Controls §130.1(c) //§160.5(b)4C	Primary/Skylit Daylighting §130.1(d) /§160.5(b)4D	Secondary Daylighting §130.1(d) /§160.5(b)4D	Interlocked Systems §140.6(a)1/ §170.2(e)2A	Field Inspector	
								Pass	Fail
Restrooms	All Other Space Types	Readily Accessible and located in the same space.	NA: Restrooms	Occupancy Sensor	NA: Rm < 24sf Glazing	NA: Rm < 24sf Glazing	No	☐	☐
Concessions	All Other Space Types	Readily Accessible and located in the same space.	NA: Space <100SF	Occupancy Sensor	NA: Rm < 24sf Glazing	NA: Rm < 24sf Glazing	No	☐	☐
Storage	All Other Space Types	Readily Accessible and located in the same space.	NA: Space <100SF	NA: Elec. equip. rm	NA: Rm < 24sf Glazing	NA: Rm < 24sf Glazing	No	☐	☐
Laundry	All Other Space Types	Readily Accessible and located in the same space.	Dimmer	Occupancy Sensor	NA: Rm < 24sf Glazing	NA: Rm < 24sf Glazing	No	☐	☐
Team Room	All Other Space Types	Readily Accessible and located in the same space.	Dimmer	Occupancy Sensor	NA: Rm < 24sf Glazing	NA: Rm < 24sf Glazing	No	☐	☐
								13	
								Plan Sheet Showing Daylit Zones:	
								EN1.0	

STATE OF CALIFORNIA
Indoor Lighting
CALIFORNIA ENERGY COMMISSION

CERTIFICATE OF COMPLIANCE		NRCC-LTI-E
Project Name: Parlier HS Stadium Replacement - Building N	**Report Page:**	**(Page 5 of 7)**
	Date Prepared:	5/15/2026

I. LIGHTING POWER ALLOWANCE: COMPLETE BUILDING OR AREA CATEGORY METHODS

Each area complying using the Complete Building or Area Category Methods per §140.6(b) are included in this table. Column 06 indicates if additional lighting power allowances per §140.6(c) or adjustments per §140.6(a) are being used .

Conditioned Spaces

01	02	03	04	05	06	
Area Description	Complete Building or Area Category Primary Function Area	Allowed Density (W/ft²)	Area (ft²)	Allowed Wattage (Watts)	Additional Allowance / Adjustment	
					Area CategoryPAF	PAF
Restrooms	Restroom	0.65	1,388	902.2	No	No
Concessions	Kitchen/ Food Preparation	0.95	494	469.3	No	No
Storage	Electrical, Mechanical, or Telephone Room	0.4	145	58	No	No
Laundry	Laundry	0.45	354	159.3	No	No
Team Room	Locker/Dressing Room	0.45	907	408.2	No	No
	TOTALS:		3,288	1,997	See Tables J, or P for detail	

J. ADDITIONAL ALLOWANCE: AREA CATEGORY METHOD QUALIFYING LIGHTING SYSTEM

This section does not apply to this project.

P. POWER ADJUSTMENT: LIGHTING CONTROL CREDIT (POWER ADJUSTMENT FACTOR (PAF))

This section does not apply to this project.

Q. ONE-FOR-ONE LUMINAIRE ALTERATIONS

This section does not apply to this project.

R. 80% LIGHTING POWER FOR ALL ALTERATIONS - CONTROLS EXCEPTIONS

This section does not apply to this project.

STATE OF CALIFORNIA
Indoor Lighting
CALIFORNIA ENERGY COMMISSION

CERTIFICATE OF COMPLIANCE		NRCC-LTI-E
Project Name: Parlier HS Stadium Replacement - Building N	**Report Page:**	**(Page 6 of 7)**
	Date Prepared:	5/15/2026

S. DAYLIGHT DESIGN POWER ADJUSTMENT FACTOR (PAF)

This section does not apply to this project.

T. DWELLING UNIT LIGHTING

This section does not apply to this project.

U. DECLARATION OF REQUIRED CERTIFICATES OF INSTALLATION

Selections have been made based on information provided in this document. If any selections have been changed by permit applicant, an explanation should be included in Table E. Additional Remarks. These documents must be provided to the building inspector during construction and can be found online

Form/Title
NRCI-LTI-E - Must be submitted for all buildings

V. DECLARATION OF REQUIRED CERTIFICATES OF ACCEPTANCE

Selections have been made based on information provided in this document. If any selections have been changed by the permit applicant, an explanation should be included in Table E. Additional Remarks. These documents must be provided to the building inspector during construction and any with "-A" in the form name must be completed through an Acceptance Test Technician Certification Provider (ATTCP). For more information visit: http://www.energy.ca.gov/title24/attcp/providers.html

Form/Title	Systems/Spaces To Be Field Verified
NRCA-LTI-02-A - Must be submitted for occupancy sensors and automatic time switch controls.	Whole Building Time Switch; Restrooms; Concessions; Laundry; Team Room;

STATE OF CALIFORNIA
Indoor Lighting
CALIFORNIA ENERGY COMMISSION

CERTIFICATE OF COMPLIANCE		NRCC-LTI-E
Project Name: Parlier HS Stadium Replacement - Building N	**Report Page:**	**(Page 7 of 7)**
Project Address: 603 3rd Street	**Date Prepared:**	5/15/2026

DOCUMENTATION AUTHOR'S DECLARATION STATEMENT

I certify that this Certificate of Compliance documentation is accurate and complete.

Documentation Author Name:	Documentation Author Signature:
Richard J. Hardin	
Company: Hardin-Davidson Engineering	Signature Date: 2026-05-15
Address: 356 Pollasky Ave., Suite 200	CEA/HERS/ECC Certification Identification (if applicable): E9125
City/State/Zip: Clovis CA 93612	Phone: 559-323-4995

RESPONSIBLE PERSON'S DECLARATION STATEMENT

I certify the following under penalty of perjury, under the laws of the State of California:

1. The information provided on this Certificate of Compliance is true and correct.
2. I am eligible under Division 3 of the Business and Professions Code to accept responsibility for the building design or system design identified on this Certificate of Compliance (responsible designer)
3. The energy features and performance specifications, materials, components, and manufactured devices for the building design or system design identified on this Certificate of Compliance conform to the requirements of Title 24, Part 1 and Part 6 of the California Code of Regulations.
4. The building design features or system design features identified on this Certificate of Compliance are consistent with the information provided on other applicable compliance documents, worksheets, calculations, plans and specifications submitted to the enforcement agency for approval with this building permit application.
5. I will ensure that a completed signed copy of this Certificate of Compliance shall be made available with the building permit(s) issued for the building, and made available to the enforcement agency for all applicable inspections. I understand that a completed signed copy of this Certificate of Compliance is required to be included with the documentation the builder provides to the building owner at occupancy.

Responsible Person Name:	Responsible Person Signature:
Richard J. Hardin	
Responsible Person Scope:	
Company: Hardin-Davidson Engineering	Date Signed: 2026-05-15
Address: 356 Pollasky Ave, Suite 200	License: E9125
City/State/Zip: Clovis CA 93612	Phone: 559-323-4995

STATE OF CALIFORNIA
Outdoor Lighting
CALIFORNIA ENERGY COMMISSION

CERTIFICATE OF COMPLIANCE		NRCC-LTO-E
This document is used to demonstrate compliance with requirements in §110.9, §130.0, §130.2, §140.7, and §141.0(b)2L for outdoor lighting scopes using the prescriptive path for nonresidential and hotel/motel occupancies. It is also used to document compliance with requirements in §160.5, §170.2(e)6, §180.1(a) and §180.2(b)4Bv for outdoor lighting scopes using the prescriptive path for multifamily and mixed-use occupancies. Multifamily includes dormitory and senior living facilities.		
Project Name: Parlier HS Stadium Replacement - Building N	**Report Page:**	**(Page 1 of 8)**
Project Address: 603 3rd Street	**Date Prepared:**	5/15/2026

A. GENERAL INFORMATION

01	Project Location (city)	Parlier	04 Total Illuminated Hardscape Area (ft²)	4966
02	Climate Zone	13		
03	Outdoor Lighting Zone per Title 24 Part 1 §10.114 or as designated by Authority Having Jurisdiction (AHJ):			
☐	LZ-0: Very Low - Undeveloped Parkland	☒ LZ-2: Moderate - Urban Clusters	☐ LZ-4: High - Must be reviewed by CA Energy Commission for Approval	
☐	LZ-1: Low - Rural Areas	☐ LZ-3: Moderately High - Urban Areas		
05	Occupancy Types within Project			

★ Support Areas ● All Other Occupancies

B. PROJECT SCOPE

This table includes outdoor lighting systems that are within the scope of the permit application and are demonstrating compliance using the prescriptive path outlined in §140.7 / §170.2(e)6 or §141.0(b)2L / § 180.2(b)4Bv for alterations.

My Project Consists of:

01	02	
☒ New Lighting System	Must Comply with Allowances from §140.7 / §170.2(e)6	
☐ Altered Lighting System	Is your alteration increasing the connected lighting load (Watts)?	○ Yes ○ No
03	04	05
% of Existing Luminaires Being Altered[1]	Sum Total of Luminaires Being Added or Altered	Calculation Method
☐ < 10% ☐ >= 10% and < 50% ☐ >= 50%		

Please proceed to Table F, Outdoor Lighting Fixture Schedule to define the project's luminaires.

[1] *FOOTNOTES: % of Existing Luminaires Being Altered = (Sum Total of Luminaires Being Added or Altered / Existing Luminaires within the Scope of the Permit Application) x 100.*

STATE OF CALIFORNIA
Outdoor Lighting
CALIFORNIA ENERGY COMMISSION

CERTIFICATE OF COMPLIANCE		NRCC-LTO-E
Project Name: Parlier HS Stadium Replacement - Building N	**Report Page:**	**(Page 2 of 8)**
	Date Prepared:	5/15/2026

C. COMPLIANCE RESULTS

Results in this table are automatically calculated from data input and calculations in Tables F through N. Note: If any cell on this table says "COMPLIES with Exceptional Conditions" refer to Table D. Exceptional Conditions for guidance or see applicable Table referenced below.

Calculations of Total Allowed Lighting Power (Watts) §140.7 / §170.2(e)6 or §141.0(b)2L / § 180.2(b)4Bv									Compliance Results					
01		02		03		04		05	06		07		08	09
General Hardscape Allowance §140.7(d)1 / §170.2(e)6 (See Table I)	+	Per Application §140.7(d)2 / §170.2(e)6 (See Table J)	+	Sales Frontage §140.7(d)2 (See Table K)	+	Ornamental §140.7(d)2 / §170.2(e)6 (See Table L)	+	Per Specific Area §140.7(d)2 / §170.2(e)6 (See Table M)	OR Existing Power Allowance §141.0(b)2L / § 180.2(b)4Bv (See Table N)	=	**Total Allowed** (Watts)	≥	**Total Actual** (Watts)	**07 must be >= 08**
353	+	---	+	---	+	---	+	97.6	OR ---	=	451	≥	420	COMPLIES
Shielding Compliance (See Table G for Details)														N/A
Controls Compliance (See Table H for Details)														COMPLIES

D. EXCEPTIONAL CONDITIONS

This table is auto-filled with uneditable comments because of selections made or data entered in tables throughout the form.

E. ADDITIONAL REMARKS

This table includes remarks made by the permit applicant to the Authority Having Jurisdiction.

STATE OF CALIFORNIA
Outdoor Lighting
CALIFORNIA ENERGY COMMISSION

CERTIFICATE OF COMPLIANCE		NRCC-LTO-E
Project Name: Parlier HS Stadium Replacement - Building N	**Report Page:**	**(Page 3 of 8)**
	Date Prepared:	5/15/2026

F. OUTDOOR LIGHTING FIXTURE SCHEDULE

For new or altered lighting systems demonstrating compliance with §140.7 / §170.2(e)6 all new luminaires being installed and any existing luminaires remaining or being moved within the spaces covered by the permit application are included in the Table below. For altered lighting systems using the Existing Power method per §141.0(b)2L only new luminaires being installed and replacement luminaires being installed as part of the project scope are included (ie, existing luminaires remaining or existing luminaires being moved are not included). Outdoor lighting attached to multifamily buildings and controlled from the inside of a dwelling unit are included in Table H, and are not included here. All other multifamily outdoor lighting is included here.

Designed Wattage:

01	02		03	04	05	06	07	08	09	10	
Name or Item Tag	Complete Luminaire Description		Watts per luminaire[1, 2]	How is Wattage determined	Total Number Luminaires [2]	Luminaire Status [3]	Excluded per §140.7(a) / §170.2(e)6A	Design Watts	Cutoff Req. > 6,200 initial lumen output §130.2(b) /§160.5(c).1.[4]	Field Inspector	
										Pass	Fail
K	44w Wall Pack	☐ Linear	44	Mfr. Spec	3	New	☐	132	NA: < 6200 lumens	☐	☐
L	15.2w Wall Mounted LED	☐ Linear	15.2	Mfr. Spec	6	New	☐	91.2	NA: < 6200 lumens	☐	☐
M	14w Canopy LED	☐ Linear	14	Mfr. Spec	10	New	☐	140	NA: < 6200 lumens	☐	☐
N/NE	19w Wall Pack	☐ Linear	19	Mfr. Spec	3	New	☐	57	NA: < 6200 lumens	☐	☐
							Total Design Watts:	420			

* NOTES: Selections with a * require a note in the space below explaining how compliance is achieved.
EX. Luminaire is lighting a statue; EXCEPTION 2 to §130.2(b)

[1] *FOOTNOTES: Authority Having Jurisdiction may ask for Luminaire cut sheets to confirm wattage used for compliance per §130.0(c) / §160.5(b)*

[2] *For linear luminaires, wattage should be indicated as W/lf instead of Watts/luminaire. Total linear feet should be indicated in column 05 instead of number of luminaires.*

[3] *Select "New" for new luminaires in a new outdoor lighting project, or for added luminaires in an alteration. Select "Altered" for replacement luminaires in an alteration. Select "Existing to Remain" for existing luminaires within the project scope that are not being altered and are remaining. Select "Existing Reinstalled" for existing luminaires which are being removed and reinstalled as part of the project scope.*

[4] *Compliance with mandatory shielding requirements is required for luminaires with initial lumen output >= 6,200 unless exempted by §130.2(b)/ §160.5(c)*

STATE OF CALIFORNIA
Outdoor Lighting
CALIFORNIA ENERGY COMMISSION

CERTIFICATE OF COMPLIANCE		NRCC-LTO-E
Project Name: Parlier HS Stadium Replacement - Building N	**Report Page:**	**(Page 4 of 8)**
	Date Prepared:	5/15/2026

G. SHIELDING REQUIREMENTS (BUG)

This section does not apply to this project.

H. OUTDOOR LIGHTING CONTROLS

This table demonstrates compliance with controls requirements for all new or altered luminaires installed as part of the permit application. For alteration projects, luminaires which are existing to remain (ie untouched) and luminaires which are removed and reinstalled (wiring only) do not need to be included in this table even if they are within the spaces covered by the permit application.
Outdoor lighting for nonresidential buildings, parking garages and common service areas in multifamily buildings must be documented separately from outdoor lighting attached to multifamily buildings and controlled from the inside of a dwelling unit

Mandatory Controls for Nonresidential Occupancies, Parking Garages & Common Areas in Multifamily Buildings

01	02	03	04	05	
Area Description	Shut-Off §130.2(c)1 / §160.5(c)	Auto-Schedule §130.2(c)2 / §160.5(c)	Motion Sensor §130.2(c)3 / §160.5(c)	Field Inspector	
				Pass	Fail
Exterior Lighting	Astronomical Timer	Provided	NA: Each Luminaire <= 40 Watts	☐	☐
Mascot Lighting	Photocontrol	Provided	NA: Facade	☐	☐

[1] *FOOTNOTE: Text has been abbreviated, please refer to Table 160.5-A to confirm compliance with the specific light source technologies listed.*

[2] *Authority having jurisdiction may ask for cutsheets or other documentation to confirm compliance of light source.*

[3] *Recessed luminaires marked for use in fire-rated installations, and recessed luminaires installed in non-insulated ceilings are excepted from ii and iii.*

STATE OF CALIFORNIA
Outdoor Lighting
CALIFORNIA ENERGY COMMISSION

CERTIFICATE OF COMPLIANCE		NRCC-LTO-E
Project Name: Parlier HS Stadium Replacement - Building N	**Report Page:**	**(Page 5 of 8)**
	Date Prepared:	5/15/2026

I. LIGHTING POWER ALLOWANCE (per §140.7 /§170.2(e))

This table includes areas using allowance calculations per §140.7 /§170.2(e). General Hardscape Allowance is per Table 140.7-A/Table 170.2-R while "Use it or lose it" Allowances are per Table 140.7-B /Table 170.2-S. Indicate which allowances are being used to expand sections for user input. Luminaires that qualify for one of the "Use it or lose it" allowances shall not qualify for another "Use it or lose it" allowance.
Outdoor lighting attached to multifamily buildings and controlled from the inside of a dwelling unit are included in Table H. and are not included here. All other multifamily outdoor lighting is included here.

	01				
	☒ General Hardscape Allowance Table I (below)	"Use it or lose it" Allowance (select all that apply) (select all that apply)			
		☐ Per Application Table J	☐ Sales Frontage Table K	☐ Ornamental Table L	☒ Per Specific Area Table M

Calculated General Hardscape Lighting Power Allowance per Table 140.7-A for Nonresidential & Hotel/Motel

02	03	04	05	06	07	08	09
Area Description	Area Wattage Allowance (AWA)			Linear Wattage Allowance (LWA)			Total General AWA + LWA (Watts)
	Illuminated Area (ft²)	Allowed Density (W/ft²)	Area Allowance (Watts)	Perimeter Length (lf)	Allowed Density (W/lf)	Linear Allowance (Watts)	
Exterior Lighting	4966	0.019	94.4	391	0.2	58.6	153
					Initial Wattage Allowance for Entire Site (Watts):		200
					Instances of Initial Wattage Allowance (LZ 0 only)[1]		
					Total General Hardscape Allowance (Watts):		353

J. LIGHTING ALLOWANCE: PER APPLICATION

This section does not apply to this project.

K. LIGHTING ALLOWANCE: SALES FRONTAGE

This section does not apply to this project.

L. LIGHTING ALLOWANCE: ORNAMENTAL

This section does not apply to this project.

PARLIER HS STADIUM REPLACEMENT
603 3rd Street
Parlier CA 93648

CLIENT PROJECT NO.: 250093
DSA SUBMISSION
DSA APPL. NO. : 02-124002 DSA FILE NO. : 10-H12

PARLIER UNIFIED SCHOOL DISTRICT

REGISTERED PROFESSIONAL ENGINEER R. J. HARDIN No. 9125 ELECTRICAL STATE OF CALIFORNIA

PBK
www.pbk.com
559-448-8400
FRESNO, CA

CLIENT
PARLIER UNIFIED SCHOOL DISTRICT
DATE YYYY/MM/DD | PROJECT NUMBER 250093
DRAWING HISTORY

No.	Description	Date
1	RFI #003	06/03/2026
2	ADDENDUM #3	06/08/2026
3	ADDENDUM #4	06/12/2026

CHECKED BY: HDE
DRAWN BY: HDE

BUILDING N - T24 COMPLIANCE FORMS

EX3.3

Plot Stamp:
6/22/2026 9:21:06 AM

0"
1"

BUILDING N - T24 COMPLIANCE FORMS
EX3.4
FOR BLUEBEAM LABELING/OCR:

DELETED UNDER ALT. BID #3

STATE OF CALIFORNIA
Outdoor Lighting CALIFORNIA ENERGY COMMISSION

CERTIFICATE OF COMPLIANCE		NRCC-LTO-E
Project Name:	Parlier HS Stadium Replacement - Building N	**Report Page:** (Page 6 of 8)
		Date Prepared: 5/15/2026

M. LIGHTING ALLOWANCE: PER SPECIFIC AREA

This table includes areas using the wattage allowance per specific area from Table 140.7-B /Table 170.2-S. More than one specific area allowance may be taken in a single project, if applicable. However, multiple specific area allowances may not be taken for the exact same area on the site.

01	02	03	04	05	06	07	08	09	10
Area Description	Specific Area Type per Table 140.7-B	CALCULATED ALLOWANCE (Watts)			DESIGN WATTS				Additional Allowance (Watts)
		Specific Area (ft^2)[1]	Allowed Density (W/ft^2)	Extra Allowance (Watts)	Luminaire Name or Item Tag	Watts per Luminaire	# of Luminaires	Design Watts	
Facade Lighting	BuildingFacade	976	0.1	97.6	K	44	3	132	97.6
							Total Design Watts for this Area:	132	
							Total Allowance (Watts) All Areas:		97.6

[1] *FOOTNOTES: See Table 140.7-B /Table 170.2-S for rules for calculating the specific areas (ft^2 for these additional lighting allowances.*
[2] *For luminaires indicated in Table F as linear, wattage in column 07 is W/ft instead of Watts/luminaire. Total linear feet should be indicated in column 08 instead of number of luminaires.*

N. EXISTING CONDITIONS POWER ALLOWANCE (alterations only)

This section does not apply to this project.

O. DECLARATION OF REQUIRED CERTIFICATES OF INSTALLATION

Selections have been made based on information provided in this document. If any selection has been changed by permit applicant, an explanation should be included in Table E. Additional Remarks. These documents must be provided to the building inspector during construction and can be found online

Form/Title
NRCI-LTO-E - Must be submitted for all buildings

STATE OF CALIFORNIA
Outdoor Lighting CALIFORNIA ENERGY COMMISSION

CERTIFICATE OF COMPLIANCE		NRCC-LTO-E
Project Name:	Parlier HS Stadium Replacement - Building N	**Report Page:** (Page 7 of 8)
		Date Prepared: 5/15/2026

P. DECLARATION OF REQUIRED CERTIFICATES OF ACCEPTANCE

Selections have been made based on information provided in this document. If any selection has been changed by permit applicant, an explanation should be included in Table E. Additional Remarks. These documents must be provided to the building inspector during construction and must be completed through an Acceptance Test Technician Certification Provider (ATTCP). For more information visit: http://www.energy.ca.gov/title24/attcp/providers.html

Form/Title	Systems/Spaces To Be Field Verified
NRCA-LTO-02-A - Must be submitted for all outdoor lighting controls except for alterations where controls are added to <= 20 luminaires.	Exterior Lighting; Mascot Lighting;

STATE OF CALIFORNIA
Outdoor Lighting CALIFORNIA ENERGY COMMISSION

CERTIFICATE OF COMPLIANCE		NRCC-LTO-E
Project Name:	Parlier HS Stadium Replacement - Building N	**Report Page:** (Page 8 of 8)
Project Address:	603 3rd Street	**Date Prepared:** 5/15/2026

DOCUMENTATION AUTHOR'S DECLARATION STATEMENT

I certify that this Certificate of Compliance documentation is accurate and complete.

Documentation Author Name: Richard J. Hardin	Documentation Author Signature:
Company: Hardin-Davidson Engineering	Signature Date: 2026-05-15
Address: 356 Pollasky Ave., Suite 200	CEA/AEA/ECC Certification Identification (if applicable): E9125
City/State/Zip: Clovis CA 93612	Phone: 559-323-4995

RESPONSIBLE PERSON'S DECLARATION STATEMENT

I certify the following under penalty of perjury, under the laws of the State of California:

1. The information provided on this Certificate of Compliance is true and correct.
2. I am eligible under Division 3 of the Business and Professions Code to accept responsibility for the building design or system design identified on this Certificate of Compliance (responsible designer)
3. The energy features and performance specifications, materials, components, and manufactured devices for the building design or system design identified on this Certificate of Compliance conform to the requirements of Title 24, Part 1 and Part 6 of the California Code of Regulations.
4. The building design features or system design features identified on this Certificate of Compliance are consistent with the information provided on other applicable compliance documents, worksheets, calculations, plans and specifications submitted to the enforcement agency for approval with this building permit application.
5. I will ensure that a completed signed copy of this Certificate of Compliance shall be made available with the building permit(s) issued for the building, and made available to the enforcement agency for all applicable inspections. I understand that a completed signed copy of this Certificate of Compliance is required to be included with the documentation the builder provides to the building owner at occupancy.

Responsible Person Name: Richard J. Hardin	Responsible Person Signature:
Responsible Person Scope:	
Company: Hardin-Davidson Engineering	Date Signed: 2026-05-15
Address: 356 Pollasky Ave, Suite 200	License: E9125
City/State/Zip: Clovis CA 93612	Phone: 559-323-4995

STATE OF CALIFORNIA
Solar And Battery CALIFORNIA ENERGY COMMISSION

CERTIFICATE OF COMPLIANCE		NRCC-SAB-E
Project Name:	Parlier HS Stadium Replacement - Building N	**Report Page:** (Page 1 of 6)
Project Address:	603 3rd Street	**Date Prepared:** 5/15/2026

This document is used to demonstrate compliance with prescriptive PV and battery requirements in §140.10/§170.2 for nonresidential, multifamily and mixed-use buildings and prescriptive solar thermal requirements in §170.2(d)3C for multifamily and hotel/ motel occupancies. When PV/battery/solar thermal requirements don't apply or are traded using the performance approach, this document demonstrates compliance with mandatory solar readiness requirements in §110.10/ §160.8 for newly constructed buildings which are either multifamily ten stories or fewer, hotel/motel ten stories or fewer or all other nonresidential buildings three stories or fewer. It is also used to demonstrate compliance with solar readiness in §110.10/ §160.8 for additions to nonresidential, multifamily or hotel/motel building types which add more than 2,000 ft^2 of roof area. Alterations, or additions of less than 2,000 ft^2 of roof area, are not required to comply with solar readiness, solar PV and battery requirements and do not need to complete this document.

A. GENERAL INFORMATION

01	Project Location (city)	Parlier	04	Building Occupancies	All Other OccupanciesSupport Areas
02	Climate Zone	13	05	Construction Type	New construction w/ roof <=533 ft^2
03	Square Footage of Building (ft^2)	3288	06	Number of Stories	Bldg <= 3 stories

B. PROJECT SCOPE

The compliance path the project is using to comply per §110.10(b)1B/ §140.10/ §170.2(g and h) is indicated below.

Compliance with Solar Photovoltaic (PV) and Battery Requirements in §140.10/ §170.2(g and h)

☒ Provided PV system and battery storage sized per §140.10/ §170.2 (g and h)	The project has included an installed PV system and battery storage system per requirements in §140.10/ §170.2(g and h) as documented in Table J.
☐ Exception to PV and Battery: Not enough Solar Access Roof Area	The total of all available Solar Access Roof Area(s) of the project site is less than three percent of the conditioned floor area as documented in Table J per Exception 1 to Section 140.10(a) & Exception 1 to Section 170.2(g).
☐ Exception to PV and Battery: Required PV < 4kW	The required PV system capacity is less than 4 kW dc as documented in Table J per Exception 2 to Section 140.10(a) & Exception 2 to Section 170.2(g).
☐ Exception to PV and Battery: No contiguous Solar Access Roof Area	The Solar Access Roof Area(s) of the project site contains less than 80 contiguous square feet as documented in Table J per Exception 3 to Section 140.10(a) & Exception 3 to Section 170.2(g).
☐ Exception to PV and Battery: Can't meet snow load	The project has a roof design where the enforcement authority has verified it is not possible for the PV system, including panels, modules, components, supports, and attachments to the roof structure, to meet ASCE 7-16 Chapter 7, Snow Loads per Exception 4 to Section 140.10(a) & Exception 4 to 170.2(g).
☐ Exception to PV and Battery: Multifamily without virtual energy credits	The project is a multifamily building in an area where a load serving entity does not provide a program where PV generation is compensated through virtual energy bill credits. Also, there is no community solar program and the utility does not support a virtual energy bill program per exception 5 to 170.2(g).

STATE OF CALIFORNIA
Solar And Battery CALIFORNIA ENERGY COMMISSION

CERTIFICATE OF COMPLIANCE		NRCC-SAB-E
Project Name:	Parlier HS Stadium Replacement - Building N	**Report Page:** (Page 2 of 6)
		Date Prepared: 5/15/2026

Compliance with Solar Thermal Water Heating Requirements in §170.2(d)2Bii (Multifamily and hotel/ motel occupancies only)

01	
☐	The project includes a hotel/motel or multifamily occupancy with a gas or propane central water-heating system (serves 2+ dwelling units) and includes a permanently installed domestic solar water-heating system to comply with §170.2(d)2Bii and Reference Residential Appendix RA4, as documented in Table H. Compliance meets Exception 2 to solar ready requirements in §110.10(b).

C. COMPLIANCE RESULTS

Results in this table are automatically calculated from data input and calculations in Tables F through I. Note: If any cell on this table says "DOES NOT COMPLY" or "COMPLIES with Exceptional Conditions" refer to Table D. for guidance or see the applicable Table referenced below.

Allocated Solar Zone				Installed PV System					Installed SWH System				Smart Tstat and Alternative EE Measure		Compliance Results
01		02		03		04			05		06		07	08	
Required Minimum Area (ft^2)	<=	Designated Area (ft^2)	OR	Required Minimum DC Power Rating (Watts)	<=	Designed DC Power Rating (Watts)	OR		Required Minimum Solar Savings Fraction	<=	Designed/Rated Solar Savings Fraction	OR	JA5 Compliant Thermostat Specified?	Alternative Energy Efficiency Measure	
				01											
(See Table F)				(See Tables G or I)					(See Table H)				(See Table I)		
	<=		OR	5,324	<=	6,100	OR			<=		OR			COMPLIES
				Location in construction documents showing the location for inverters and metering equipment and a pathway for the routing of conduit/ plumbing to the electrical service/ water heating system per §110.10(c).											
Battery storage system design meets the minimum requirements in Joint Appendix JA12 and the minimum energy (kWh)/ power (kW) capacity per Table J.															COMPLIES

D. EXCEPTIONAL CONDITIONS

This table is auto-filled with uneditable comments because of selections made or data entered in tables throughout the form.

E. ADDITIONAL REMARKS

This table is includes remarks made by the permit applicant to the Authority Having Jurisdiction.

STATE OF CALIFORNIA
Solar And Battery CALIFORNIA ENERGY COMMISSION

CERTIFICATE OF COMPLIANCE		NRCC-SAB-E
Project Name:	Parlier HS Stadium Replacement - Building N	**Report Page:** (Page 3 of 6)
		Date Prepared: 5/15/2026

F. ALLOCATED SOLAR ZONE

This section does not apply to this project.

G. PERMANENTLY INSTALLED SOLAR PV FOR SOLAR READY EXCEPTION

This section does not apply to this project.

H. PERMANENTLY INSTALLED SOLAR HOT WATER SYSTEMS

This section does not apply to this project.

I. SMART THERMOSTATS AND ALTERNATIVE EFFICIENCY MEASURE FOR SOLAR READY EXCEPTION

This section does not apply to this project.

STATE OF CALIFORNIA
Solar And Battery CALIFORNIA ENERGY COMMISSION

CERTIFICATE OF COMPLIANCE		NRCC-SAB-E
Project Name:	Parlier HS Stadium Replacement - Building N	**Report Page:** (Page 4 of 6)
		Date Prepared: 5/15/2026

J. PHOTOVOLTAIC (PV) AND BATTERY ENERGY STORAGE SYSTEMS

This table documents compliance with prescriptive photovoltaic and battery system requirements in §140.10/ §170.2(g and h). Unless the project meets one of the listed exceptions, or trades-off PV in an energy model using performance path, §140.10/ §170.2(g and h) requires installed photovoltaic and battery systems for newly constructed buildings. The installed PV systems must meet the minimum requirements in Joint Appendix 11.

Photovoltaic (PV) System

Equation 140.10-A/170.2-D Calculation Method

01	02	03	04
Building Type	Conditioned Floor Area (ft^2)	Tenant Space Exception to §140.10(a)/§170.2(g) (Must check all to meet Exception)	Min Size of PV System Required (kWdc)
School or Classroom	3,266	☐ Tenant space is served by HVAC system that does not serve other tenant spaces in the building ☐ Tenant space has individual utility meter that does not include electric consumption of other tenant spaces in the building ☐ Commission has not approved community solar program applicable to this project ☐ Load serving entity does not provide program for virtual energy bill credits	5.32

SARA Calculation Method

05	06	07	08	09	10	11	12
Roof Name	Roof Slope	Area of New Roof[1] (ft^2)	Roof Area < 70% Solar Access[2] (ft^2)	Plansheet or Document showing Solar Access Calculations	Roof area occupied, no structural support, not available due to other state codes, < 80 contiguous (ft^2)	Solar Access Roof Area (SARA) (ft^2)	Min Capacity of PV System Required (kWdc)
Roof	<2:12	3,993	0	EN1.1	0	3,993	5.32
					Total Min Size PV System Required for all Spaces (kWdc):		5.32
						Total Size PV System in Design (kWdc):	6.1

[1] *FOOTNOTES: Includes the area of the building's roof space capable of structurally supporting a PV system and the area of all roof space on covered parking areas, carports, and all other newly constructed structures on the site that are compatible with supporting a PV system per Title 24, Part 2 Section 1511.2.*
[2] *Solar access must be determined using CEC approved solar access calculation tools found at https://www.energy.ca.gov/programs-and-topics/programs/building-energy-efficiency-standards/solar-assessment-tools.*
[3] *As specified by CBC Section 503.1.4.*

STATE OF CALIFORNIA
Solar And Battery CALIFORNIA ENERGY COMMISSION

CERTIFICATE OF COMPLIANCE		NRCC-SAB-E
Project Name:	Parlier HS Stadium Replacement - Building N	**Report Page:** (Page 5 of 6)
		Date Prepared: 5/15/2026

K. DECLARATION OF REQUIRED CERTIFICATES OF INSTALLATION

Selections have been made based on information provided in this document. If any selections have been changed by the permit applicant, an explanation should be included Table E. Additional Remarks and ExceptionalConditionMessageCCSABE += UserChangedSelectionInCI. These documents must be provided to the building inspector during construction and can be found online

Form/Title
NRCI-SAB-01-E - Must be submitted for all buildings that must comply with solar readiness or PV/Battery requirements.

L. DECLARATION OF REQUIRED CERTIFICATES OF ACCEPTANCE

There are no forms required for this project.

STATE OF CALIFORNIA
Solar And Battery CALIFORNIA ENERGY COMMISSION

CERTIFICATE OF COMPLIANCE		NRCC-SAB-E
Project Name:	Parlier HS Stadium Replacement - Building N	**Report Page:** (Page 6 of 6)
Project Address:	603 3rd Street	**Date Prepared:** 5/15/2026

DOCUMENTATION AUTHOR'S DECLARATION STATEMENT

I certify that this Certificate of Compliance documentation is accurate and complete.

Documentation Author Name: Richard J. Hardin	Documentation Author Signature:
Company: Hardin-Davidson Engineering	Signature Date: 2026-05-15
Address: 356 Pollasky Ave., Suite 200	CEA/AEA/ECC Certification Identification (if applicable): E9125
City/State/Zip: Clovis CA 93612	Phone: 559-323-4995

RESPONSIBLE PERSON'S DECLARATION STATEMENT

I certify the following under penalty of perjury, under the laws of the State of California:

1. The information provided on this Certificate of Compliance is true and correct.
2. I am eligible under Division 3 of the Business and Professions Code to accept responsibility for the building design or system design identified on this Certificate of Compliance (responsible designer)
3. The energy features and performance specifications, materials, components, and manufactured devices for the building design or system design identified on this Certificate of Compliance conform to the requirements of Title 24, Part 1 and Part 6 of the California Code of Regulations.
4. The building design features or system design features identified on this Certificate of Compliance are consistent with the information provided on other applicable compliance documents, worksheets, calculations, plans and specifications submitted to the enforcement agency for approval with this building permit application.
5. I will ensure that a completed signed copy of this Certificate of Compliance shall be made available with the building permit(s) issued for the building, and made available to the enforcement agency for all applicable inspections. I understand that a completed signed copy of this Certificate of Compliance is required to be included with the documentation the builder provides to the building owner at occupancy.

Responsible Person Name: Richard J. Hardin	Responsible Person Signature:
Responsible Person Scope:	
Company: Hardin-Davidson Engineering	Date Signed: 2026-05-15
Address: 356 Pollasky Ave, Suite 200	License: E9125
City/State/Zip: Clovis CA 93612	Phone: 559-323-4995

PBK
www.pbk.com
559-448-8400
FRESNO, CA

PARLIER HS STADIUM REPLACEMENT
603 3rd Street
Parlier, CA 93648

CLIENT PROJECT NO: 250093
DSA SUBMISSION
DSA APPL. NO. 02-124002 DSA FILE NO. : 10-H12

PARLIER UNIFIED SCHOOL DISTRICT

REGISTERED PROFESSIONAL ENGINEER R.J. HARDIN No. 9125 ELECTRICAL STATE OF CALIFORNIA

CLIENT	
PARLIER UNIFIED SCHOOL DISTRICT	
DATE YYYY/MM/DD	PROJECT NUMBER 250093

DRAWING HISTORY

No.	Description	Date
3	RFI #003	06/03/2026
4	ADDENDUM #3	06/08/2026
5	ADDENDUM #4	06/12/2026

CHECKED BY: HDE
DRAWN BY: HDE

BUILDING N - T24 COMPLIANCE FORMS

EX3.4

Plot Stamp:
6/22/2026 9:21:06 AM

0"
1"

BUILDING N - T24 COMPLIANCE FORMS ALT. BID #3
EX3.5
FOR BLUEBEAM LABELING/OCR:

STATE OF CALIFORNIA
Indoor Lighting
CALIFORNIA ENERGY COMMISSION

CERTIFICATE OF COMPLIANCE — **NRCC-LTI-E**

This document is used to demonstrate compliance with requirements in §110.9, §110.12(c), §130.0, §130.1, §140.6 and §141.0(b)2 for indoor lighting scopes using the prescriptive path for nonresidential and hotel/motel occupancies. It is also used to document compliance with requirements in §160.5, §170.2(e) and §180.2(b)4 for indoor lighting scopes using the prescriptive path for multifamily occupancies. Multifamily includes dormitary and senior living facilities.

Project Name: Parlier HS Stadium Replacement - Building N	**Report Page:** **(Page 1 of 7)**
Project Address: 603 3rd Street	**Date Prepared:** 5/15/2026

A. GENERAL INFORMATION

01	Project Location (city)	Parlier	04	Total Conditioned Floor Area (ft²)	2,027
02	Climate Zone	13	05	Total Unconditioned Floor Area (ft²)	0
03	Occupancy Types Within Project (select all that apply):		06	# of Stories (Habitable Above Grade)	1

● Support Areas ● All Other Occupancies

B. PROJECT SCOPE

This table includes any lighting systems that are within the scope of the permit application and are demonstrating compliance using the prescriptive path outlined in §140.6 / §170.2(e) or §141.0(b)2 / §180.2(b)4 for alterations.

Scope of Work	Conditioned Spaces		Unconditioned Spaces	
01	02	03	04	05
My Project Consists of (check all that apply):	Calculation Method	Area (ft²)	Calculation Method	Area (ft²)
☒ New Lighting System	Area Category Method	2027	Area Category Method	0
☐ New Lighting System - Parking Garage				
Total Area of Work (ft²)	2027		0	

STATE OF CALIFORNIA
Indoor Lighting
CALIFORNIA ENERGY COMMISSION

CERTIFICATE OF COMPLIANCE — **NRCC-LTI-E**

Project Name: Parlier HS Stadium Replacement - Building N	**Report Page:** **(Page 2 of 7)**
	Date Prepared: 5/15/2026

C. COMPLIANCE RESULTS

If any cell on this table says "DOES NOT COMPLY" or "COMPLIES with Exceptional Conditions" refer to Table D, for guidance.

Lighting in conditioned and unconditioned spaces must not be combined for compliance per §140.6(b)1 /§170.2(e)	Allowed Lighting Power per §140.6(b) /§170.2(e) (Watts)					Adjusted Lighting Power per §140.6(a) /§170.2(e) (Watts)					Compliance Results
	01	02	03	04		05	06		07		08
	Complete Building §140.6(c)1	Area Category §140.6(c)2 /§170.2(e)4	Area Category Additional §140.6(c)2G / §170.2(e)4Av (+)	**Total Allowed** (Watts)	≥	Total Designed (Watts)	Adjustments PAF Lighting Control Credits §140.6(a)2 /§170.2(e)1B (-)	=	**Total Adjusted** (Watts) *Includes Adjustments		**05 must be >= 08 §140.6 /§170.2(e)**
	(See Table I)	(See Table I)	(See Table J)			(See Table F)	(See Table P)				
Conditioned		1,429.5	0	1,430	≥	801	0	=	801		COMPLIES
Unconditioned					≥			=			
Controls Compliance (See Table H for Details)											COMPLIES
One-for-one Luminaire Alterations Compliance (See Table Q for Details)											

D. EXCEPTIONAL CONDITIONS

This table is auto-filled with uneditable comments because of selections made or data entered in tables throughout the form.

E. ADDITIONAL REMARKS

This table includes remarks made by the permit applicant to the Authority Having Jurisdiction.

STATE OF CALIFORNIA
Indoor Lighting
CALIFORNIA ENERGY COMMISSION

CERTIFICATE OF COMPLIANCE — **NRCC-LTI-E**

Project Name: Parlier HS Stadium Replacement - Building N	**Report Page:** **(Page 3 of 7)**
	Date Prepared: 5/15/2026

F. INDOOR LIGHTING FIXTURE SCHEDULE

This table includes all planned permanent and portable lighting other than dwelling unit/ hotel/ motel room lighting. Multifamily dwelling unit and hotel/motel room lighting is documented in Table T. If using Table T to document lighting in multifamily common use areas providing shared provisions for living, eating, cooking or sanitation, those luminaires are not included here.

Designed Wattage: Conditioned Spaces

01	02	03	04	05	06	07	08	09	10	
Name or Item Tag	Complete Luminaire Description	Modular (Track) Fixture	Small Aperture & Color Change [1]	Watts per luminaire [2]	How is Wattage determined	Total Number of Luminaires	Excluded per §140.6(a)3 / §170.2(e)2C	Design Watts	Field Inspector	
									Pass	Fail
A/AE/AS	36.7w 2x4 Troffer	No	NA	36.7	Mfr. Spec	9	No	330.3	☐	☐
B/BE	26.6w Surface Mounted LED	No	NA	26.6	Mfr. Spec	5	No	133	☐	☐
C	10.4w Recessed Downlight	No	NA	10.4	Mfr. Spec	28	No	291.2	☐	☐
D	23w Strip Light	No	NA	23	Mfr. Spec	2	No	46	☐	☐
							Total Designed Watts: CONDITIONED SPACES	801		

[1] *FOOTNOTE: Design Watts for small aperture and color changing luminaires which qualify per §140.6(a)4B /§170.2(e)2D is adjusted to be 75% /80% of their rated wattage. Table F automatically makes this adjustment, the permit applicant should enter full rated wattage in column D5.*

[2] *Authority Having Jurisdiction may ask for Luminaire cut sheets to confirm wattage used for compliance per §130.0(c) /§160.5(b). Wattage used must be the maximum rated for the luminaire, not the lamp.*

G. MODULAR LIGHTING SYSTEMS

This section does not apply to this project.

H. INDOOR LIGHTING CONTROLS (Not including PAFs)

This table includes lighting controls for conditioned and unconditioned spaces.

Building Level Controls

01	02	03	
		Field Inspector	
		Pass	Fail
Mandatory Demand Response §110.12(c)	Shut-off controls §130.1(c) / §160.5(b)4C	☐	☐
NA < 4,000W subject to multilevel	Whole Building Auto Time Switch	☐	☐

STATE OF CALIFORNIA
Indoor Lighting
CALIFORNIA ENERGY COMMISSION

CERTIFICATE OF COMPLIANCE — **NRCC-LTI-E**

Project Name: Parlier HS Stadium Replacement - Building N	**Report Page:** **(Page 4 of 7)**
	Date Prepared: 5/15/2026

H. INDOOR LIGHTING CONTROLS (Not including PAFs)

Area Level Controls

04	05	06	07	08	09	10	11	12	
Area Description	Complete Building or Area Category Primary Function Area	Manual Controls §130.1(a) /§160.5(b)4A	Multi-Level Controls §130.1(b) /§160.5(b)4B	Shut-Off Controls §130.1(c) //§160.5(b)4C	Primary/Sky lit Daylighting §130.1(d) /§160.5(b)4D	Secondary Daylighting §130.1(d) /§160.5(b)4D	Interlocked Systems §140.6(a)1/ §170.2(e)2A	Field Inspector	
								Pass	Fail
Restrooms	All Other Space Types	Readily Accessible and located in the same space.	NA: Restrooms	Occupancy Sensor	NA: Rm < 24sf Glazing	NA: Rm < 24sf Glazing	No	☐	☐
Concessions	All Other Space Types	Readily Accessible and located in the same space.	NA: Space <100SF	Occupancy Sensor	NA: Rm < 24sf Glazing	NA: Rm < 24sf Glazing	No	☐	☐
Storage	All Other Space Types	Readily Accessible and located in the same space.	NA: Space <100SF	NA: Elec. equip. rm	NA: Rm < 24sf Glazing	NA: Rm < 24sf Glazing	No	☐	☐
							13		
							Plan Sheet Showing Daylit Zones:		
							EN1.0		

I. LIGHTING POWER ALLOWANCE: COMPLETE BUILDING OR AREA CATEGORY METHODS

Each area complying using the Complete Building or Area Category Methods per §140.6(b) are included in this table. Column 06 indicates if additional lighting power allowances per §140.6(c) or adjustments per §140.6(a) are being used .

Conditioned Spaces

01	02	03	04	05	06

STATE OF CALIFORNIA
Indoor Lighting
CALIFORNIA ENERGY COMMISSION

CERTIFICATE OF COMPLIANCE — **NRCC-LTI-E**

Project Name: Parlier HS Stadium Replacement - Building N	**Report Page:** **(Page 5 of 7)**
	Date Prepared: 5/15/2026

I. LIGHTING POWER ALLOWANCE: COMPLETE BUILDING OR AREA CATEGORY METHODS

Area Description	Complete Building or Area Category Primary Function Area	Allowed Density (W/ft²)	Area (ft²)	Allowed Wattage (Watts)	Additional Allowance / Adjustment	
					Area CategoryPAF	PAF
Restrooms	Restroom	0.65	1,388	902.2	No	No
Concessions	Kitchen/ Food Preparation	0.95	494	469.3	No	No
Storage	Electrical, Mechanical, or Telephone Room	0.4	145	58	No	No
		TOTALS:	2,027	1,429.5	See Tables J, or P for detail	

J. ADDITIONAL ALLOWANCE: AREA CATEGORY METHOD QUALIFYING LIGHTING SYSTEM

This section does not apply to this project.

P. POWER ADJUSTMENT: LIGHTING CONTROL CREDIT (POWER ADJUSTMENT FACTOR (PAF))

This section does not apply to this project.

Q. ONE-FOR-ONE LUMINAIRE ALTERATIONS

This section does not apply to this project.

R. 80% LIGHTING POWER FOR ALL ALTERATIONS - CONTROLS EXCEPTIONS

This section does not apply to this project.

S. DAYLIGHT DESIGN POWER ADJUSTMENT FACTOR (PAF)

This section does not apply to this project.

T. DWELLING UNIT LIGHTING

This section does not apply to this project.

STATE OF CALIFORNIA
Indoor Lighting
CALIFORNIA ENERGY COMMISSION

CERTIFICATE OF COMPLIANCE — **NRCC-LTI-E**

Project Name: Parlier HS Stadium Replacement - Building N	**Report Page:** **(Page 6 of 7)**
	Date Prepared: 5/15/2026

U. DECLARATION OF REQUIRED CERTIFICATES OF INSTALLATION

Selections have been made based on information provided in this document. If any selections have been changed by permit applicant, an explanation should be included in Table E. Additional Remarks. These documents must be provided to the building inspector during construction and can be found online

Form/Title
NRCI-LTI-E - Must be submitted for all buildings

V. DECLARATION OF REQUIRED CERTIFICATES OF ACCEPTANCE

Selections have been made based on information provided in this document. If any selections have been changed by the permit applicant, an explanation should be included in Table E. Additional Remarks. These documents must be provided to the building inspector during construction and any with "A" in the form name must be completed through an Acceptance Test Technician Certification Provider (ATTCP). For more information visit: http://www.energy.ca.gov/title24/attcp/providers.html

Form/Title	Systems/Spaces To Be Field Verified
NRCA-LTI-02-A - Must be submitted for occupancy sensors and automatic time switch controls.	Whole Building Time Switch; Restrooms; Concessions;

STATE OF CALIFORNIA
Indoor Lighting
CALIFORNIA ENERGY COMMISSION

CERTIFICATE OF COMPLIANCE — **NRCC-LTI-E**

Project Name: Parlier HS Stadium Replacement - Building N	**Report Page:** **(Page 7 of 7)**
Project Address: 603 3rd Street	**Date Prepared:** 5/15/2026

DOCUMENTATION AUTHOR'S DECLARATION STATEMENT

I certify that this Certificate of Compliance documentation is accurate and complete.

Documentation Author Name: Richard J. Hardin	Documentation Author Signature:
Company: Hardin-Davidson Engineering	Signature Date: 2026-05-15
Address: 356 Pollasky Ave., Suite 200	CEA/HERS Certification Identification (if applicable): E9125
City/State/Zip: Clovis CA 93612	Phone: 559-323-4995

RESPONSIBLE PERSON'S DECLARATION STATEMENT

I certify the following under penalty of perjury, under the laws of the State of California:

1. The information provided on this Certificate of Compliance is true and correct.
2. I am eligible under Division 3 of the Business and Professions Code to accept responsibility for the building design or system design identified on this Certificate of Compliance (responsible designer)
3. The energy features and performance specifications, materials, components, and manufactured devices for the building design or system design identified on this Certificate of Compliance conform to the requirements of Title 24, Part 1 and Part 6 of the California Code of Regulations.
4. The building design features or system design features identified on this Certificate of Compliance are consistent with the information provided on other applicable compliance documents, worksheets, calculations, plans and specifications submitted to the enforcement agency for approval with this building permit application.
5. I will ensure that a completed signed copy of this Certificate of Compliance shall be made available with the building permit(s) issued for the building, and made available to the enforcement agency for all applicable inspections. I understand that a completed signed copy of this Certificate of Compliance is required to be included with the documentation the builder provides to the building owner at occupancy.

Responsible Person Name: Richard J. Hardin	Responsible Person Signature:
Responsible Person Scope:	
Company: Hardin-Davidson Engineering	Date Signed: 2026-05-15
Address: 356 Pollasky Ave, Suite 200	License: E9125
City/State/Zip: Clovis CA 93612	Phone: 559-323-4995

STATE OF CALIFORNIA
Outdoor Lighting
CALIFORNIA ENERGY COMMISSION

CERTIFICATE OF COMPLIANCE — **NRCC-LTO-E**

Project Name: Parlier HS Stadium Replacement - Building N	**Report Page:** **(Page 1 of 7)**
Project Address: 603 3rd Street	**Date Prepared:** 5/15/2026

This document is used to demonstrate compliance with requirements in §110.9, §130.0, §130.2, §140.7, and §141.0(b)2L for outdoor lighting scopes using the prescriptive path for nonresidential and hotel/motel occupancies. It is also used to document compliance with requirements in §160.5, §170.2(e)6, §180.1(a) and §180.2(b)4Bv for outdoor lighting scopes using the prescriptive path for multifamily and mixed-use occupancies. Multifamily includes dormitory and senior living facilities.

A. GENERAL INFORMATION

01	Project Location (city)	Parlier	04	Total Illuminated Hardscape Area (ft²)	5863
02	Climate Zone	13			
03	Outdoor Lighting Zone per Title 24 Part 1 §10.114 or as designated by Authority Having Jurisdiction (AHJ):				
☐	LZ-0: Very Low - Undeveloped Parkland	☒ LZ-2: Moderate - Urban Clusters	☐ LZ-4: High - Must be reviewed by CA Energy Commission for Approval		
☐	LZ-1: Low - Rural Areas	☐ LZ-3: Moderately High - Urban Areas			
05	Occupancy Types within Project				

● Support Areas ● All Other Occupancies

B. PROJECT SCOPE

This table includes outdoor lighting systems that are within the scope of the permit application and are demonstrating compliance using the prescriptive path outlined in §140.7 / §170.2(e)6 or §141.0(b)2L / § 180.2(b)4Bv for alterations.

My Project Consists of:

01	02	
☒ New Lighting System	Must Comply with Allowances from §140.7 / §170.2(e)6	
☐ Altered Lighting System	Is your alteration increasing the connected lighting load (Watts)?	○ Yes ○ No
03	04	05
% of Existing Luminaires Being Altered[1]	Sum Total of Luminaires Being Added or Altered	Calculation Method
☐ < 10% ☐ >= 10% and < 50% ☐ >= 50%		

Please proceed to Table F, Outdoor Lighting Fixture Schedule to define the project's luminaires.

[1] *FOOTNOTES: % of Existing Luminaires Being Altered = (Sum Total of Luminaires Being Added or Altered / Existing Luminaires within the Scope of the Permit Application) x 100.*

STATE OF CALIFORNIA
Outdoor Lighting
CALIFORNIA ENERGY COMMISSION

CERTIFICATE OF COMPLIANCE — **NRCC-LTO-E**

Project Name: Parlier HS Stadium Replacement - Building N	**Report Page:** **(Page 2 of 7)**
	Date Prepared: 5/15/2026

C. COMPLIANCE RESULTS

Results in this table are automatically calculated from data input and calculations in Tables F through N. Note: If any cell on this table says "COMPLIES with Exceptional Conditions" refer to Table D. Exceptional Conditions for guidance or see applicable Table referenced below.

Calculations of Total Allowed Lighting Power (Watts) §140.7 / §170.2(e)6 or §141.0(b)2L / § 180.2(b)4Bv												Compliance Results		
01		02		03		04		05		06		07	08	09
General Hardscape Allowance §140.7(d)1 / §170.2(e)6 (See Table I)	+	Per Application §140.7(d)2 / §170.2(e)6 (See Table J)	+	Sales Frontage §140.7(d)2 (See Table K)	+	Ornamental §140.7(d)2 / §170.2(e)6 (See Table L)	+	Per Specific Area §140.7(d)2 / §170.2(e)6 (See Table M)	OR	Existing Power Allowance §141.0(b)2L / § 180.2(b)4Bv (See Table N)	=	**Total Allowed** (Watts)	≥	**Total Actual** (Watts)	**07 must be >= 08**
359	+	---	+	---	+	---	+	---	+	---	OR	---	=	359	≥	186	COMPLIES
Shielding Compliance (See Table G for Details)																	N/A
Controls Compliance (See Table H for Details)																	COMPLIES

D. EXCEPTIONAL CONDITIONS

This table is auto-filled with uneditable comments because of selections made or data entered in tables throughout the form.

E. ADDITIONAL REMARKS

This table includes remarks made by the permit applicant to the Authority Having Jurisdiction.

STATE OF CALIFORNIA
Outdoor Lighting
CALIFORNIA ENERGY COMMISSION

CERTIFICATE OF COMPLIANCE — **NRCC-LTO-E**

Project Name: Parlier HS Stadium Replacement - Building N	**Report Page:** **(Page 3 of 7)**
	Date Prepared: 5/15/2026

F. OUTDOOR LIGHTING FIXTURE SCHEDULE

For new or altered lighting systems demonstrating compliance with §140.7 / §170.2(e)6 all new luminaires being installed and any existing luminaires remaining or being moved within the spaces covered by the permit application are included in the Table below. For altered lighting systems using the Existing Power method per §141.0(b)2L only new luminaires being installed and replacement luminaires being installed as part of the project scope are included (ie, existing luminaires remaining or existing luminaires being moved are not included). Outdoor lighting attached to multifamily buildings and controlled from the inside of a dwelling unit are included in Table H, and are not included here. All other multifamily outdoor lighting is included here.

Designed Wattage:

01	02	03	04	05	06	07	08	09	10	
Name or Item Tag	Complete Luminaire Description	Watts per luminaire[1, 2]	How is Wattage determined	Total Number Luminaires [2]	Luminaire Status [3]	Excluded per §140.7(a) / §170.2(e)6A	Design Watts	Cutoff Req. > 6,200 initial lumen output §130.2(b) /§160.5(c).[4]	Field Inspector	
									Pass	Fail
L	15.2w Wall Mounted LED	☐ Linear	15.2	Mfr. Spec	6	New	☐	91.2	NA: < 6200 lumens	☐	☐
N/NE	19w Wall Pack	☐ Linear	19	Mfr. Spec	5	New	☐	95	NA: < 6200 lumens	☐	☐
							Total Design Watts:	186			

* NOTES: Selections with a * require a note in the space below explaining how compliance is achieved.
EX: Luminaire is lighting a statue; EXCEPTION 2 to §130.2(b)

[1] *FOOTNOTES: Authority Having Jurisdiction may ask for Luminaire cut sheets to confirm wattage used for compliance per §130.0(c) / §160.5(b)*

[2] *For linear luminaires, wattage should be indicated as W/ft instead of Watts/luminaire. Total linear feet should be indicated in column 05 instead of number of luminaires.*

[3] *Select "New" for new luminaires in a new outdoor lighting project, or for added luminaires in an alteration. Select "Altered" for replacement luminaires in an alteration. Select "Existing to Remain" for existing luminaires within the project scope that are not being altered and are remaining. Select "Existing Reinstalled" for existing luminaires which are being removed and reinstalled as part of the project scope.*

[4] *Compliance with mandatory shielding requirements is required for luminaires with initial lumen output >= 6,200 unless exempted by §130.2(b)/ §160.5(c)*

G. SHIELDING REQUIREMENTS (BUG)

This section does not apply to this project.

STATE OF CALIFORNIA
Outdoor Lighting
CALIFORNIA ENERGY COMMISSION

CERTIFICATE OF COMPLIANCE — **NRCC-LTO-E**

Project Name: Parlier HS Stadium Replacement - Building N	**Report Page:** **(Page 4 of 7)**
	Date Prepared: 5/15/2026

H. OUTDOOR LIGHTING CONTROLS

This table demonstrates compliance with controls requirements for all new or altered luminaires installed as part of the permit application. For alteration projects, luminaires which are existing to remain (ie untouched) and luminaires which are removed and reinstalled (wiring only) do not need to be included in this table even if they are within the spaces covered by the permit application.
Outdoor lighting for nonresidential buildings, parking garages and common service areas in multifamily buildings must be documented separately from outdoor lighting attached to multifamily buildings and controlled from the inside of a dwelling unit

Mandatory Controls for Nonresidential Occupancies, Parking Garages & Common Areas in Multifamily Buildings

01	02	03	04		05	
Area Description	Shut-Off §130.2(c)1 / §160.5(c)	Auto-Schedule §130.2(c)2 / §160.5(c)	Motion Sensor §130.2(c)3 / §160.5(c)		Field Inspector	
					Pass	Fail
Exterior Lighting	Astronomical Timer	Provided	NA: Each Luminaire <= 40 Watts		☐	☐

[1] *FOOTNOTE: Text has been abbreviated, please refer to Table 160.5-A to confirm compliance with the specific light source technologies listed.*

[2] *Authority having jurisdiction may ask for catsheets or other documentation to confirm compliance of light source.*

[3] *Recessed luminaires marked for use in fire-rated installations, and recessed luminaires installed in non-insulated ceilings are excepted from ii and iii.*

STATE OF CALIFORNIA
Outdoor Lighting
CALIFORNIA ENERGY COMMISSION

CERTIFICATE OF COMPLIANCE — **NRCC-LTO-E**

Project Name: Parlier HS Stadium Replacement - Building N	**Report Page:** **(Page 5 of 7)**
	Date Prepared: 5/15/2026

I. LIGHTING POWER ALLOWANCE (per §140.7 /§170.2(e))

This table includes areas using allowance calculations per §140.7 /§170.2(e). General Hardscape Allowance is per Table 140.7-A/Table 170.2-R while "Use it or lose it" Allowances are per Table 140.7-B /Table 170.2-S. Indicate which allowances are being used to expand sections for user input. Luminaires that qualify for one of the "Use it or lose it" allowances shall not qualify for another "Use it or lose it" allowance.
Outdoor lighting attached to multifamily buildings and controlled from the inside of a dwelling unit are included in Table H, and are not included here. All other multifamily outdoor lighting is included here.

	01				
	☒ General Hardscape Allowance Table I (below)	"Use it or lose it" Allowance (select all that apply) (select all that apply)			
		☐ Per Application Table J	☐ Sales Frontage Table K	☐ Ornamental Table L	☐ Per Specific Area Table M

Calculated General Hardscape Lighting Power Allowance per Table 140.7-A for Nonresidential & Hotel/Motel

02	03	04	05	06	07	08	09
Area Description	Area Wattage Allowance (AWA)			Linear Wattage Allowance (LWA)			Total General AWA + LWA (Watts)
	Illuminated Area (ft²)	Allowed Density (W/ft²)	Area Allowance (Watts)	Perimeter Length (lf)	Allowed Density (W/lf)	Linear Allowance (Watts)	
Exterior Lighting	5863	0.019	111.4	316	0.2	47.4	159
					Initial Wattage Allowance for Entire Site (Watts):		200
					Instances of Initial Wattage Allowance (LZ 0 only)[1]		
					Total General Hardscape Allowance (Watts):		359

J. LIGHTING ALLOWANCE: PER APPLICATION

This section does not apply to this project.

K. LIGHTING ALLOWANCE: SALES FRONTAGE

This section does not apply to this project.

L. LIGHTING ALLOWANCE: ORNAMENTAL

This section does not apply to this project.

PARLIER HS STADIUM REPLACEMENT
603 3rd Street
Parlier CA 93648

CLIENT PROJECT NO.: 250093
DSA SUBMISSION
DSA APPL. NO. : 02-124002 DSA FILE NO. : 10-H12

PARLIER UNIFIED SCHOOL DISTRICT

REGISTERED PROFESSIONAL ENGINEER R. J. HARDIN No. 9125 ELECTRICAL STATE OF CALIFORNIA

PBK
www.pbk.com
559-448-8400
FRESNO, CA

CLIENT
PARLIER UNIFIED SCHOOL DISTRICT

DATE	PROJECT NUMBER
YYYY/MM/DD	250093

DRAWING HISTORY

No.	Description	Date
1	RFI #003	06/03/2026
2	ADDENDUM #3	06/08/2026
3	ADDENDUM #4	06/12/2026

CHECKED BY: HDE
DRAWN BY: HDE

BUILDING N - T24 COMPLIANCE FORMS ALT. BID #3

EX3.5

Plot Stamp:
6/22/2026 9:21:06 AM

0"

1"

BUILDING N - T24 COMPLIANCE FORMS ALT. BID #3
EX3.6
FOR BLUEBEAM LABELING/OCR:

STATE OF CALIFORNIA
Outdoor Lighting CALIFORNIA ENERGY COMMISSION

CERTIFICATE OF COMPLIANCE		NRCC-LTO-E
Project Name: Parlier HS Stadium Replacement - Building N	**Report Page:**	**(Page 6 of 7)**
	Date Prepared:	5/15/2026

M. LIGHTING ALLOWANCE- PER SPECIFIC AREA

This section does not apply to this project.

N. EXISTING CONDITIONS POWER ALLOWANCE (alterations only)

This section does not apply to this project.

O. DECLARATION OF REQUIRED CERTIFICATES OF INSTALLATION

Selections have been made based on information provided in this document. If any selection has been changed by permit applicant, an explanation should be included in Table E. Additional Remarks. These documents must be provided to the building inspector during construction and can be found online

Form/Title
NRCI-LTO-E - Must be submitted for all buildings

P. DECLARATION OF REQUIRED CERTIFICATES OF ACCEPTANCE

Selections have been made based on information provided in this document. If any selection has been changed by permit applicant, an explanation should be included in Table E. Additional Remarks. These documents must be provided to the building inspector during construction and must be completed through an Acceptance Test Technician Certification Provider (ATTCP). For more information visit: http://www.energy.ca.gov/title24/attcp/providers.html

Form/Title	Systems/Spaces To Be Field Verified
NRCA-LTO-02-A - Must be submitted for all outdoor lighting controls except for alterations where controls are added to <= 20 luminaires.	Exterior Lighting;

STATE OF CALIFORNIA
Solar And Battery CALIFORNIA ENERGY COMMISSION

CERTIFICATE OF COMPLIANCE		NRCC-SAB-E
Project Name: Parlier HS Stadium Replacement - Building N	**Report Page:**	**(Page 2 of 6)**
	Date Prepared:	5/15/2026

Compliance with Solar Thermal Water Heating Requirements in §170.2(d)2Bii (Multifamily and hotel/ motel occupancies only)

01
☐ The project includes a hotel/motel or multifamily occupancy with a gas or propane central water-heating system (serves 2+ dwelling units) and includes a permanently installed domestic solar water-heating system to comply with §170.2(d)2Bii and Reference Residential Appendix RA4, as documented in Table H. Compliance meets Exception 2 to solar ready requirements in §110.10(b).

C. COMPLIANCE RESULTS

Results in this table are automatically calculated from data input and calculations in Tables F through I. Note: If any cell on this table says "DOES NOT COMPLY" or "COMPLIES with Exceptional Conditions" refer to Table D. for guidance or see the applicable Table referenced below.

Allocated Solar Zone				Installed PV System					Installed SWH System				Smart Tstat and Alternative EE Measure			Compliance Results
01		02		03		04			05		06		07	08		
Required Minimum Area (ft²)	<=	Designated Area (ft²)	OR	Required Minimum DC Power Rating (Watts)	<=	Designed DC Power Rating (Watts)	OR		Required Minimum Solar Savings Fraction	<=	Designed/Rated Solar Savings Fraction	OR	JA5 Compliant Thermostat Specified?	Alternative Energy Efficiency Measure	OR	
(See Table F)				[See Tables G or J]					(See Table H)				(See Table I)			
	<=		OR	0	<=	0	OR			<=		OR				
Location in construction documents showing the location for inverters and metering equipment and a pathway for the routing of conduit/ plumbing to the electrical service/ water heating system per §110.10(c).																
Battery storage system design meets the minimum requirements in Joint Appendix JA12 and the minimum energy (kWh)/ power (kW) capacity per Table J.																COMPLIES

D. EXCEPTIONAL CONDITIONS

This table is auto-filled with uneditable comments because of selections made or data entered in tables throughout the form.

E. ADDITIONAL REMARKS

This table is includes remarks made by the permit applicant to the Authority Having Jurisdiction.

STATE OF CALIFORNIA
Outdoor Lighting CALIFORNIA ENERGY COMMISSION

CERTIFICATE OF COMPLIANCE		NRCC-LTO-E
Project Name: Parlier HS Stadium Replacement - Building N	**Report Page:**	**(Page 7 of 7)**
Project Address: 603 3rd Street	**Date Prepared:**	5/15/2026

DOCUMENTATION AUTHOR'S DECLARATION STATEMENT

I certify that this Certificate of Compliance documentation is accurate and complete.

Documentation Author Name:	Documentation Author Signature:
Richard J. Hardin	
Company:	Signature Date:
Hardin-Davidson Engineering	2026-05-15
Address:	CEA/ANA/IGC Certification Identification (if applicable):
356 Pollasky Ave., Suite 200	E9125
City/State/Zip:	Phone:
Clovis CA 93612	559-323-4995

RESPONSIBLE PERSON'S DECLARATION STATEMENT

I certify the following under penalty of perjury, under the laws of the State of California:
1. The information provided on this Certificate of Compliance is true and correct.
2. I am eligible under Division 3 of the Business and Professions Code to accept responsibility for the building design or system design identified on this Certificate of Compliance (responsible designer)
3. The energy features and performance specifications, materials, components, and manufactured devices for the building design or system design identified on this Certificate of Compliance conform to the requirements of Title 24, Part 1 and Part 6 of the California Code of Regulations.
4. The building design features or system design features identified on this Certificate of Compliance are consistent with the information provided on other applicable compliance documents, worksheets, calculations, plans and specifications submitted to the enforcement agency for approval with this building permit application.
5. I will ensure that a completed signed copy of this Certificate of Compliance shall be made available with the building permit(s) issued for the building, and made available to the enforcement agency for all applicable inspections. I understand that a completed signed copy of this Certificate of Compliance is required to be included with the documentation the builder provides to the building owner at occupancy.

Responsible Person Name:	Responsible Person Signature:
Richard J. Hardin	
Responsible Person Scope:	
Company:	Date Signed:
Hardin-Davidson Engineering	2026-05-15
Address:	License:
356 Pollasky Ave., Suite 200	E9125
City/State/Zip:	Phone:
Clovis CA 93612	559-323-4995

STATE OF CALIFORNIA
Solar And Battery CALIFORNIA ENERGY COMMISSION

CERTIFICATE OF COMPLIANCE		NRCC-SAB-E
Project Name: Parlier HS Stadium Replacement - Building N	**Report Page:**	**(Page 3 of 6)**
	Date Prepared:	5/15/2026

F. ALLOCATED SOLAR ZONE

This section does not apply to this project.

G. PERMANENTLY INSTALLED SOLAR PV FOR SOLAR READY EXCEPTION

This section does not apply to this project.

H. PERMANENTLY INSTALLED SOLAR HOT WATER SYSTEMS

This section does not apply to this project.

I. SMART THERMOSTATS AND ALTERNATIVE EFFICIENCY MEASURE FOR SOLAR READY EXCEPTION

This section does not apply to this project.

STATE OF CALIFORNIA
Solar And Battery CALIFORNIA ENERGY COMMISSION

CERTIFICATE OF COMPLIANCE		NRCC-SAB-E
Project Name: Parlier HS Stadium Replacement - Building N	**Report Page:**	**(Page 5 of 6)**
	Date Prepared:	5/15/2026

K. DECLARATION OF REQUIRED CERTIFICATES OF INSTALLATION

Selections have been made based on information provided in this document. If any selections have been changed by the permit applicant, an explanation should be included Table E. Additional Remarks and ExceptionalConditionMessageCCSABE += UserChangedSelectionInCI. These documents must be provided to the building inspector during construction and can be found online

Form/Title
NRCI-SAB-01-E - Must be submitted for all buildings that must comply with solar readiness or PV/Battery requirements.

L. DECLARATION OF REQUIRED CERTIFICATES OF ACCEPTANCE

There are no forms required for this project.

STATE OF CALIFORNIA
Solar And Battery CALIFORNIA ENERGY COMMISSION

CERTIFICATE OF COMPLIANCE		NRCC-SAB-E
This document is used to demonstrate compliance with prescriptive PV and battery requirements in §140.10/§170.2 for nonresidential, multifamily and mixed-use buildings and prescriptive solar thermal requirements in §170.2(d)3C for multifamily and hotel/ motel occupancies. When PV/battery/solar thermal requirements don't apply or are traded using the performance approach, this document demonstrates compliance with mandatory solar readiness requirements in §110.10/ §160.8 for newly constructed buildings which are either multifamily ten stories or fewer, hotel/motel ten stories or fewer or all other nonresidential buildings three stories or fewer. It is also used to demonstrate compliance with solar readiness in §110.10/ §160.8 for additions to nonresidential, multifamily or hotel/motel building types which add more than 2,000 ft² of roof area. Alterations, or additions of less than 2,000 ft² of roof area, are not required to comply with solar readiness, solar PV and battery requirements and do not need to complete this document.		
Project Name: Parlier HS Stadium Replacement - Building N	**Report Page:**	**(Page 1 of 6)**
Project Address: 603 3rd Street	**Date Prepared:**	5/15/2026

A. GENERAL INFORMATION

01	Project Location (city)	Parlier	04	Building Occupancies	All Other OccupanciesSupport Areas
02	Climate Zone	13	05	Construction Type	New construction w/ roof <=533 ft²
03	Square Footage of Building (ft²)	2027	06	Number of Stories	Bldg <= 3 stories

B. PROJECT SCOPE

The compliance path the project is using to comply per §110.10(b)1B/ §140.10/ §170.2(g and h) is indicated below.

Compliance with Solar Photovoltaic (PV) and Battery Requirements in §140.10/ §170.2(g and h)

01	
☒	Provided PV system and battery storage sized per §140.10/ §170.2 (g and h)	The project has included an installed PV system and battery storage system per requirements in §140.10/ §170.2(g and h) as documented in Table J.
☐	Exception to PV and Battery: Not enough Solar Access Roof Area	The total of all available Solar Access Roof Area(s) of the project site is less than three percent of the conditioned floor area as documented in Table J per Exception 1 to Section 140.10(a) & Exception 1 to Section 170.2(g).
☐	Exception to PV and Battery: Required PV < 4kW	The required PV system capacity is less than 4 kW dc as documented in Table J per Exception 2 to Section 140.10(a) & Exception 2 to Section 170.2(g).
☐	Exception to PV and Battery: No contiguous Solar Access Roof Area	The Solar Access Roof Area(s) of the project site contains less than 80 contiguous square feet as documented in Table J per Exception 3 to Section 140.10(a) & Exception 3 to Section 170.2(g).
☐	Exception to PV and Battery: Can't meet snow load	The project has a roof design where the enforcement authority has verified it is not possible for the PV system, including panels, modules, components, supports, and attachments to the roof structure, to meet ASCE 7-16 Chapter 7, Snow Loads per Exception 4 to Section 140.10(a) & Exception 4 to 170.2(g).
☐	Exception to PV and Battery: Multifamily without virtual energy credits	The project is a multifamily building in an area where a load serving entity does not provide a program where PV generation is compensated through virtual energy bill credits. Also, there is no community solar program and the utility does not support a virtual energy bill program per exception 5 to 170.2(g).

STATE OF CALIFORNIA
Solar And Battery CALIFORNIA ENERGY COMMISSION

CERTIFICATE OF COMPLIANCE		NRCC-SAB-E
Project Name: Parlier HS Stadium Replacement - Building N	**Report Page:**	**(Page 4 of 6)**
	Date Prepared:	5/15/2026

J. PHOTOVOLTAIC (PV) AND BATTERY ENERGY STORAGE SYSTEMS

This table documents compliance with prescriptive photovoltaic and battery system requirements in §140.10/ §170.2(g and h). Unless the project meets one of the listed exceptions, or trades-off PV in an energy model using performance path, §140.10/ §170.2(g and h) requires installed photovoltaic and battery systems for newly constructed buildings. The installed PV systems must meet the minimum requirements in Joint Appendix 11.

Photovoltaic (PV) System

Equation 140.10-A/170.2-D Calculation Method

01	02	03		04
Building Type	Conditioned Floor Area (ft²)	Tenant Space Exception to §140.10(a)/§170.2(g) (Must check all to meet Exception)		Min Size of PV System Required (kWdc)
School or Classroom	2,015	☐	Tenant space is served by HVAC system that does not serve other tenant spaces in the building	3.28
		☐	Tenant space has individual utility meter that does not include electric consumption of other tenant spaces in the building	
		☐	Commission has not approved community solar program applicable to this project	
		☐	Load serving entity does not provide program for virtual energy bill credits	

SARA Calculation Method

05	06	07	08	09	10	11	12
Roof Name	Roof Slope	Area of New Roof[1] (ft²)	Roof Area < 70% Solar Access[2] (ft²)	Plansheet or Document showing Solar Access Calculations	Roof area occupied, no structural support, not available due to other state codes, < 80 contiguous (ft²)	Solar Access Roof Area (SARA) (ft²)	Min Capacity of PV System Required (kWdc)
Roof	<2:12	2,015	0	EN1.1	0	2,015	3.28
					Total Min Size PV System Required for all Spaces (kWdc):		0
					Total Size PV System in Design (kWdc):		0

[1] *FOOTNOTES: Includes the area of the building's roof space capable of structurally supporting a PV system and the area of all roof space on covered parking areas, carports, and all other newly constructed structures on the site that are compatible with supporting a PV system per Title 24, Part 2 Section 1511.2.*
[2] *Solar access must be determined using CEC approved solar access calculation tools found at https://www.energy.ca.gov/programs-and-topics/programs/building-energy-efficiency-standards/solar-assessment-tools.*
[3] *As specified by CBC Section 503.1.4.*

STATE OF CALIFORNIA
Solar And Battery CALIFORNIA ENERGY COMMISSION

CERTIFICATE OF COMPLIANCE		NRCC-SAB-E
Project Name: Parlier HS Stadium Replacement - Building N	**Report Page:**	**(Page 6 of 6)**
Project Address: 603 3rd Street	**Date Prepared:**	5/15/2026

DOCUMENTATION AUTHOR'S DECLARATION STATEMENT

I certify that this Certificate of Compliance documentation is accurate and complete.

Documentation Author Name:	Documentation Author Signature:
Richard J. Hardin	
Company:	Signature Date:
Hardin-Davidson Engineering	2026-05-15
Address:	CEA/AEA/ECC Certification Identification (if applicable):
356 Pollasky Ave., Suite 200	E9125
City/State/Zip:	Phone:
Clovis CA 93612	559-323-4995

RESPONSIBLE PERSON'S DECLARATION STATEMENT

I certify the following under penalty of perjury, under the laws of the State of California:
1. The information provided on this Certificate of Compliance is true and correct.
2. I am eligible under Division 3 of the Business and Professions Code to accept responsibility for the building design or system design identified on this Certificate of Compliance (responsible designer)
3. The energy features and performance specifications, materials, components, and manufactured devices for the building design or system design identified on this Certificate of Compliance conform to the requirements of Title 24, Part 1 and Part 6 of the California Code of Regulations.
4. The building design features or system design features identified on this Certificate of Compliance are consistent with the information provided on other applicable compliance documents, worksheets, calculations, plans and specifications submitted to the enforcement agency for approval with this building permit application.
5. I will ensure that a completed signed copy of this Certificate of Compliance shall be made available with the building permit(s) issued for the building, and made available to the enforcement agency for all applicable inspections. I understand that a completed signed copy of this Certificate of Compliance is required to be included with the documentation the builder provides to the building owner at occupancy.

Responsible Person Name: Richard J. Hardin	Responsible Person Signature:
Responsible Person Scope:	
Company:	Date Signed:
Hardin-Davidson Engineering	2026-05-15
Address:	License:
356 Pollasky Ave., Suite 200	E9125
City/State/Zip:	Phone:
Clovis CA 93612	559-323-4995

PBK
www.pbk.com
559-448-8400
FRESNO, CA

PARLIER HS STADIUM REPLACEMENT
603 3rd Street
Parlier, CA 93648

CLIENT PROJECT NO: 250093
DSA SUBMISSION
DSA APPL. NO. - 02-124002 DSA FILE NO. : 10-H12

PARLIER UNIFIED SCHOOL DISTRICT

REGISTERED PROFESSIONAL ENGINEER
R. J. HARDIN
No. 9125
ELECTRICAL
STATE OF CALIFORNIA

CLIENT	
PARLIER UNIFIED SCHOOL DISTRICT	
DATE	PROJECT NUMBER
YYYY/MM/DD	250093

DRAWING HISTORY

No.	Description	Date
1	RFI #003	06/03/2026
2	ADDENDUM #3	06/08/2026
3	ADDENDUM #4	06/12/2026

CHECKED BY: HDE
DRAWN BY: HDE

BUILDING N - T24 COMPLIANCE FORMS ALT. BID #3

EX3.6

Plot Stamp:
6/22/2026 9:21:06 AM

DEMO ELECTRICAL SITE
ES1.0
FOR BLUEBEAM LABELING/OCR:

0"
1"

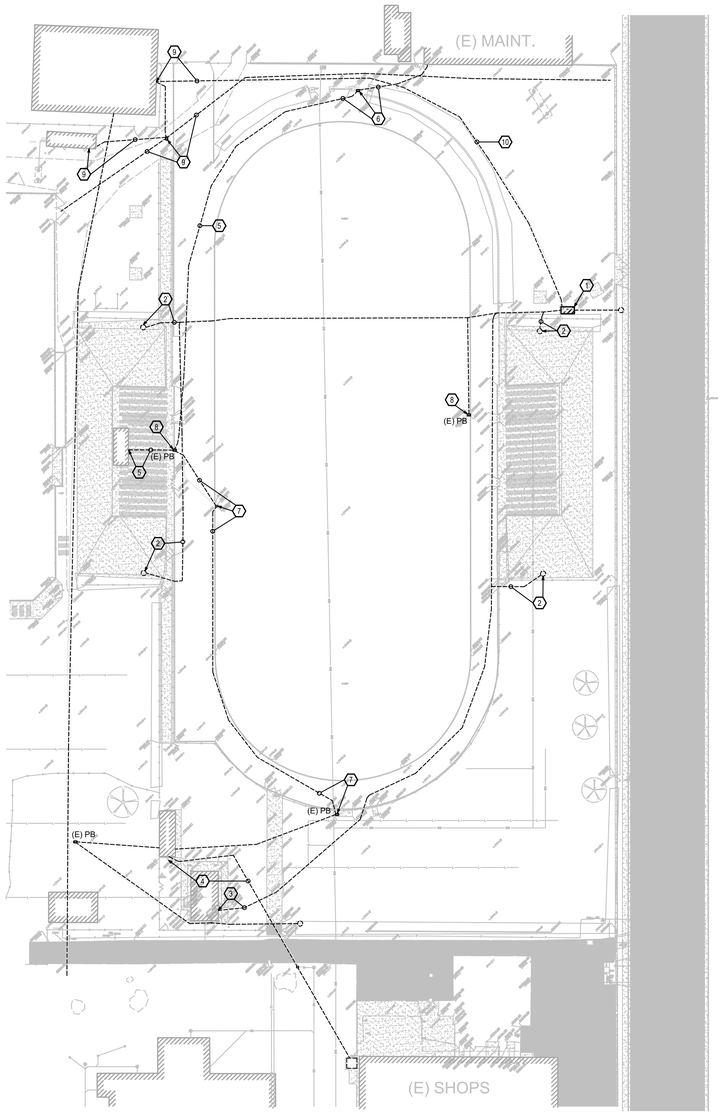

1 DEMO ELECTRICAL SITE PLAN
SCALE: 1" = 50'-0"

KEYNOTES (E)

1. REMOVE EXISTING SERVICE SWITCHBOARD 'MSB' & PAD, TRANSFORMER PAD, SECONDARY, & DRY TYPE TRANSFORMER TO BE REPLACED. MAINTAIN TO USE AS TEMPORARY PANEL UNTIL NEW SERVICE IS INSTALLED. COORDINATE SHUT DOWN TIMES WITH DISTRICT.
2. REMOVE EXISTING SPORT LIGHT POLE, HEADS, CONCRETE BASE, & FEEDER TO (E) MSB.
3. DISCONNECT EXISTING RESTROOM BUILDING & FEEDER TO (E) MSB.
4. DISCONNECT EXISTING SNACKBAR BUILDING & FEEDER TO (E) SHOPS BUILDING.
5. DISCONNECT EXISTING PRESSBOX POWER & COMMUNICATION & RUNS. MAINTAIN & EXTEND EXISTING SCOREBOARD COMMUNICATION RUN TO NEW PRESSBOX UNDER ALT. BID #2.
6. DISCONNECT EXISTING SCOREBOARD, FEEDER TO (E) MAINTENANCE BUILDING, & CONTROLS TO (E) PRESSBOX. MAINTAIN SCOREBOARD POWER & COMMUNICATION RUN UNDER ALT. BID #2.
7. DISCONNECT EXISTING OLD SCOREBOARD, SOUND SYSTEM, & RUNS. MAINTAIN SCOREBOARD POWER & COMMUNICATION UNDER ALT. BID #2.
8. REMOVE UNUSED PULLBOXES & EXPOSED CONDUIT CONFLICTING WITH NEW CONSTRUCTION. MAINTAIN OR REROUTE SCOREBOARD COMMUNICATION RUN UNDER ALT. BID # 2.
9. MAINTAIN CONNECTIONS TO BUILDINGS TO REMAIN & RECONNECT TO NEW SERVICES.
10. EXISTING FEEDERS TO BE INTERCEPTED & REPLACED.

PBK
www.pbk.com
559-448-8400
FRESNO, CA

PARLIER HS STADIUM REPLACEMENT

603 3rd Street
Parlier, CA 93648

CLIENT PROJECT NO: 250093
DSA SUBMISSION
DSA APPL. NO. : 02-124002 DSA FILE NO. : 10-H12

PARLIER UNIFIED SCHOOL DISTRICT

REGISTERED PROFESSIONAL ENGINEER
R.J. HARDIN
No. 9125
ELECTRICAL
STATE OF CALIFORNIA

CLIENT	
PARLIER UNIFIED SCHOOL DISTRICT	
DATE	PROJECT NUMBER
YYYY/MM/DD	250093

DRAWING HISTORY

No.	Description	Date
1	RFI #003	05/03/2026
2	ADDENDUM #3	05/08/2026
3	ADDENDUM #4	06/12/2026

CHECKED BY: HDE
DRAWN BY: HDE

DEMO ELECTRICAL SITE

ES1.0

Plot Stamp:
6/22/2026 9:21:06 AM

0"
1"

SITE LIGHTING
ES1.1
FOR BLUEBEAM LABELING/OCR:

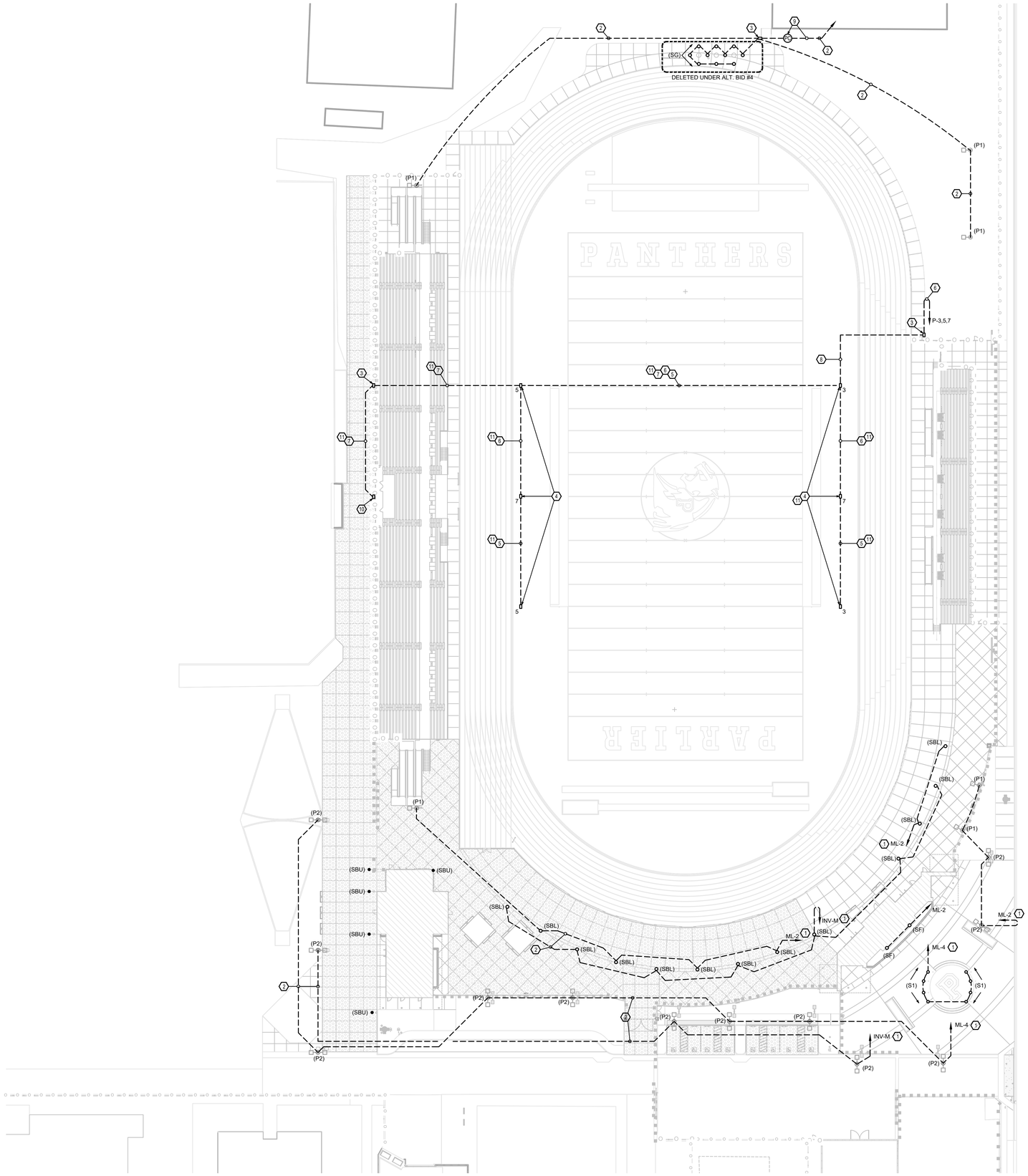

1 SITE LIGHTING
SCALE: 1" = 30'-0"

KEYNOTES

1. HOME RUN VIA LCP-M.
2. PROVIDE 3/4"C-2#10, 1#10 GND (TYP.).
3. PROVIDE 17"x30"x29"D H20 RATED PULLBOX FLUSH WITH FINISH GRADE.
4. PROVIDE 2 SECTION TRACK COM BOX, SPORT FIELD SPECIALTIES COM BOX MODEL #CBIT1830 OR APPROVED EQUAL. PROVIDE CAST BOX WITH GFCI RECEPTACLE & 15' OF 12/3 S.O. CORD. CONNECT S.O. CORD TO 2#6, 1#8 GND WITH SUBMERSIBLE RATED SPLICES. INSTALL 18" DEEP GRAVEL SUMP BELOW BOX. INSTALL BOX PER MANUFACTURER'S RECOMMENDATIONS. VERIFY & COORDINATE LOCATIONS & INSTALLATION WITH CIVIL ENGINEERING DRAWINGS.
5. PROVIDE 2"C-2#6, 1#8 GND.
6. PROVIDE 1-1/2"C-4#6, 1#8 GND.
7. PROVIDE 1-1/2"C SPARE.
8. PROVIDE 2"C-6#8, 3#8 GND.
9. PROVIDE PHOTOCELL & CONNECT TO (E) PANEL IN MAINTENANCE BUILDING, 120V, 20A CKT.
10. DATA/COMM PULLBOX PER SHEET ES1.3.
11. PROVIDE 2"C FOR FUTURE DATA/COMM.

PBK
FRESNO, CA
559-448-8400
www.pbk.com

PARLIER HS STADIUM REPLACEMENT

603 3rd Street
Parlier, CA 93648

CLIENT PROJECT NO: 250093
DSA SUBMISSION
DSA APPL. NO.: 02-124002 DSA FILE NO.: 10-H12

PARLIER UNIFIED SCHOOL DISTRICT

REGISTERED PROFESSIONAL ENGINEER
R.J. HARDIN
NO. 9125
ELECTRICAL
STATE OF CALIFORNIA

CLIENT	
PARLIER UNIFIED SCHOOL DISTRICT	
DATE YYYY/MM/DD	PROJECT NUMBER 250093

DRAWING HISTORY

No.	Description	Date
3	RFI #003	05/03/2026
4	ADDENDUM #3	05/08/2026
5	ADDENDUM #4	06/12/2026

CHECKED BY: HDE
DRAWN BY: HDE

SITE LIGHTING

ES1.1

Plot Stamp:
6/22/2026 9:21:06 AM

0"
1"

SITE POWER
ES1.2
FOR BLUEBEAM LABELING/OCR:

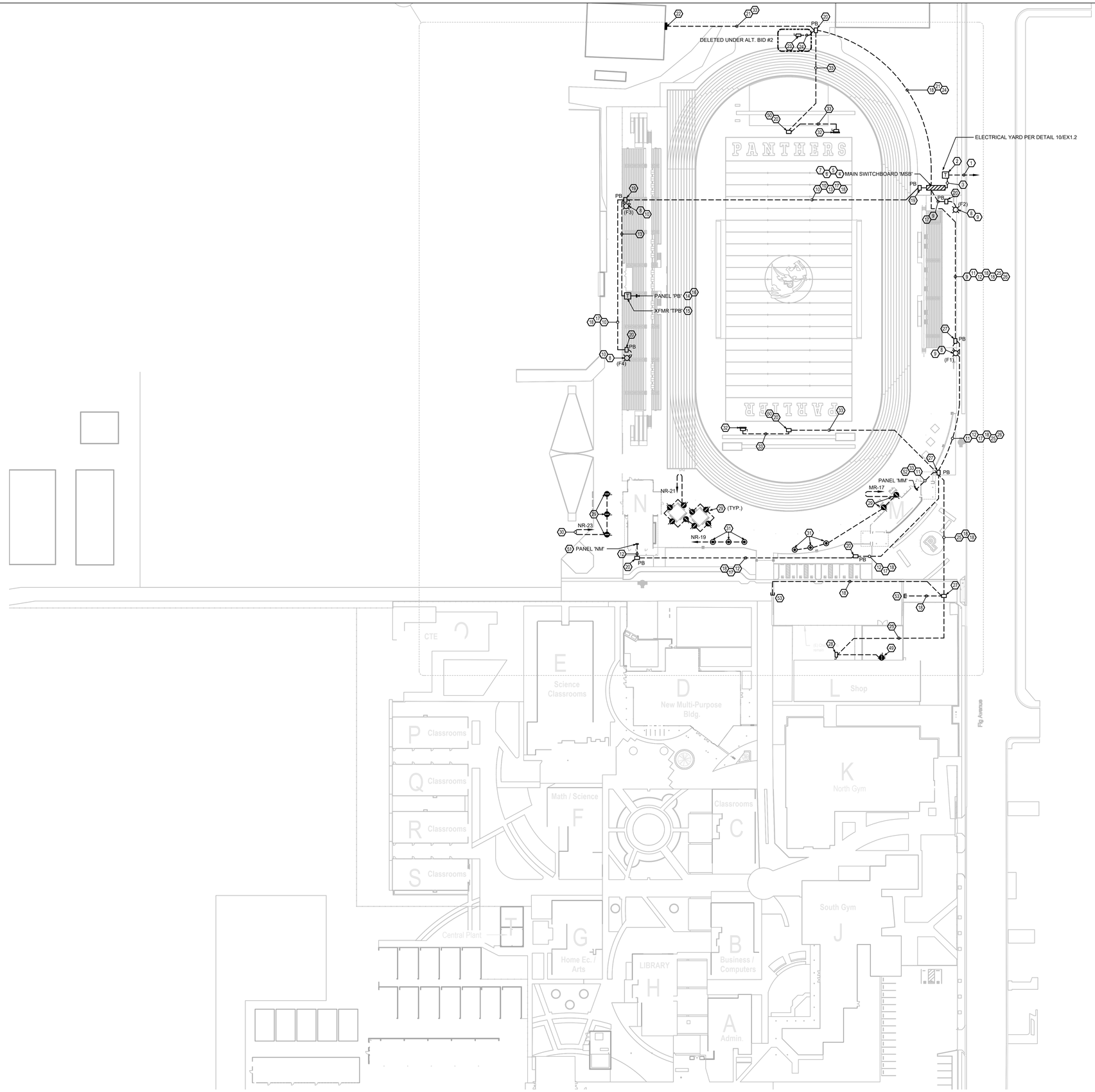

1 SITE POWER
SCALE: 1" = 50'-0"

KEYNOTES (F)

1. PROVIDE 4"C FOR PRIMARY PER PG&E REQUIREMENTS.
2. PROVIDE TRANSFORMER PAD PER PG&E REQUIREMENTS & PER DETAIL 8/EX1.2.
3. PROVIDE (4) 5"C FOR SECONDARY PER PG&E REQUIREMENTS.
4. PROVIDE W.P. MAIN SWITCHBOARD 'MSB', CONCRETE PAD, & GROUNDING PER DETAIL 4/EX1.2. PROVIDE NEW ELECTRICAL YARD NORTH OF EXISTING SERVICE PER 10/EX1.2.
5. PROVIDE SPORT LIGHTING SYSTEM CONTACTORS, CONTROLS, & MOUNTING RACK. MOUNTING RACK PER DETAIL 1/EX1.2 & 2/EX1.2.
6. PROVIDE EGRESS LIGHTING INVERTER & CONCRETE PAD PER DETAIL 3/EX1.2.
7. PROVIDE TRANSFORMER 'TP', CONCRETE PAD, GROUNDING, & PANEL 'P' PER DETAIL 8/EX1.2.
8. PROVIDE SPORT LIGHT SYSTEM POLE PER POLE DETAILS ON SHEET MS1.
9. PROVIDE FOR POLES (F1) & (F2):
   1"C-4#10, 1#10 GND (CKT A)
   1"C-2#10, 1#10 GND (CKT B)
   1"C-2#10, 1#10 GND (CKT C)
10. PROVIDE FOR POLES (F3) & (F4):
    1-1/2"C-4#6, 1#8 GND (CKT A)
    1-1/2"C-2#8, 1#10 GND (CKT B)
    1"C-2#8, 1#10 GND (CKT C)
11. PROVIDE 2"C-4#1/0, 1#4 GND (PANEL 'MM')
12. PROVIDE 4"C-4#350 KCMIL, 1#1 GND (PANEL 'NM')
13. PROVIDE 2"C-3#4, 1#8 GND (XFMR TPB)
14. PROVIDE 1-1/2"C-4#2, 1#8 GND (PANEL 'PB')
15. PROVIDE TRANSFORMER 'TPB', CONCRETE PAD & GROUNDING PER DETAIL 8/EX1.2.
16. CONNECT PRESSBOX PANEL.
17. PROVIDE 1-1/2"C SPARE.
18. PROVIDE 2"C SPARE.
19. PROVIDE 24"x36"x24"D H20 RATED PULLBOX PER DETAIL 7/EX1.2.
20. PROVIDE 17"x30"x24"D H20 RATED PULLBOX PER DETAIL 7/EX1.2.
21. PROVIDE 2"C-4#1/0, 1#4 GND (STORAGE BUILDING).
22. RECONNECT STORAGE BUILDING PANELS.

UNDER ALT. BID #2

23. CONNECT SCOREBOARD POWER. PROVIDE DISCONNECT & GROUNDING. GROUND PER DETAIL 5/EX1.2.
24. PROVIDE 1-1/2"C-2#6, 1#10 GND.
25. PROVIDE 4"C-3#600 KCMIL, 1#1/0 GND FOR WELDING SHOP RECONNECTION.
26. PROVIDE (2) 4"C FOR FUTURE PERFORMING ARTS.
27. PROVIDE 30"x48"x24"D H20 RATED PULLBOX PER DETAIL 7/EX1.2.
28. CURRENT EXISTING 400 AMP MAIN DISCONNECT AT WELDING SHOP. DISCONNECT & DE-ENERGIZE EXISTING FEEDER FROM MAIN SCHOOL SERVICE.
29. PROVIDE RECEPTACLE CAST INTO CONCRETE PEDESTAL, CANTEX 5133545 OR EQUAL BOX, LEVITON GUSBI COMBO GFCI/USB OR EQUAL RECEPTACLE, & LEVITON 4996-GY OR EQUAL FLOP LID COVER PLATE.
30. PROVIDE 3/4"C-2#10, 1#10 GND.
31. PROVIDE LEGRAND XB814 SERIES GROUND BOX WITH GFCI RECEPTACLE.
32. GAME CLOCK WITH WIRELESS COMMUNICATION PER PF1.00.
33. PROVIDE 1"C-2#12, 1#12 GND.
41. NOT USED.
42. NOT USED.
43. NOT USED.
44. NOT USED.
45. NOT USED.
46. NOT USED.
47. NOT USED.
48. NOT USED.
49. PROVIDE 20 AMP 1-POLE BREAKER IN 120V SHOP PANEL FOR EXTERIOR RECEPTACLE.
50. LOCATE BEHIND GOAL POST PER PF-1.05.
51. LOCATED IN ELECTRICAL ROOM OF BUILDING 'N'.
52. PROVIDE 2"C. STUB UP INTO ELECTRICAL ROOM FOR FUTURE GATE POWER.
53. STUB & CAP FOR FUTURE GATE POWER. VERIFY LOCATION WITH DISTRICT.

PBK
www.pbk.com
559-448-8400
FRESNO, CA

PARLIER HS STADIUM REPLACEMENT

603 3rd Street
Parlier, CA 93648

CLIENT PROJECT NO: 250093
DSA SUBMISSION
DSA APPL. NO.: 02-124002 DSA FILE NO.: 10-H12

PARLIER UNIFIED SCHOOL DISTRICT

REGISTERED PROFESSIONAL ENGINEER
R.J. HARDIN
No. 9125
ELECTRICAL
STATE OF CALIFORNIA

CLIENT	
PARLIER UNIFIED SCHOOL DISTRICT	
DATE	PROJECT NUMBER
YYYY/MM/DD	250093

DRAWING HISTORY

No.	Description	Date
3	RFI #003	05/03/2026
3	ADDENDUM #3	05/08/2026
3	ADDENDUM #4	06/12/2026

CHECKED BY: HDE
DRAWN BY: HDE

SITE POWER

ES1.2

Plot Stamp:
6/22/2026 9:21:06 AM

SITE DATA/COMM
ES1.3
FOR BLUEBEAM LABELING/OCR:

0"
1"

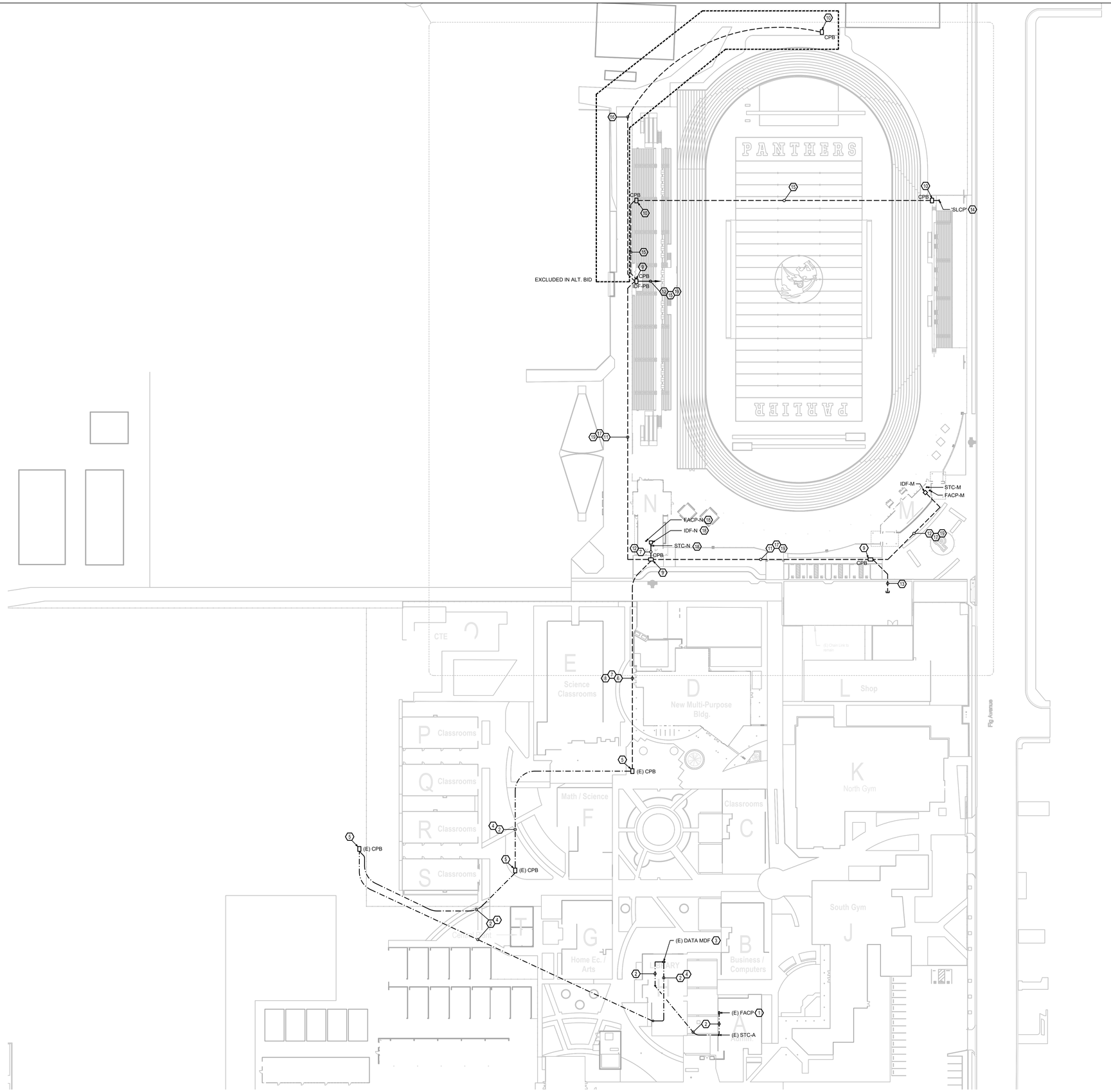

1 SITE DATA/COMM
SCALE: 1" = 50'-0"

KEYNOTES (#)

1. APPROXIMATE LOCATION OF EXISTING FIRE ALARM CONTROL PANEL. PROVIDE SINGLE MODE FIBER OPTIC PROVISIONS FOR NEW BUILDING.
2. PROVIDE NEW 6 FIBER OPTIC SINGLE MODE CABLES IN EXISTING PATHWAY. FIELD VERIFY ROUTING.
3. APPROXIMATE LOCATION OF EXISTING DATA MDF. PROVIDE (3) NEW 12 FIBER SINGLE MODE FIBER TERMINATION UNITS.
4. APPROXIMATE LOCATION OF EXISTING DATA FIBER PATHWAY. PROVIDE NEW (1) 6 FIBER & (1) 12 FIBER OPTIC SINGLE MODE CABLE.
5. APPROXIMATE LOCATION OF EXISTING DATA PULL BOX.
6. PROVIDE 4"C WITH (4) 1" INNER DUCTS. PROVIDE THREE 12 FIBER OPTIC SINGLE MODE CABLE TO NEW BUILDING N.
7. PROVIDE 2"C. PROVIDE (2) 6 FIBER OPTIC SINGLE MODE CABLE TO NEW FIRE ALARM NETWORK PANEL IN NEW BUILDING N.
8. PROVIDE DIRECTIONAL BORING FOR THIS RUN.
9. PROVIDE 30"x48"x24"D H20 RATED PULL BOX.
10. PROVIDE 24"x36"x24"D H20 RATED PULLBOX.
11. PROVIDE 4"C WITH (4) 1" INNER DUCTS & ONE 12 FIBER SINGLE MODE FIBER OPTIC CABLE & (1) 2"C SPARE.
12. PROVIDE 2"C WITH ONE 12 FIBER SINGLE MODE FIBER OPTIC CABLE & (1) 2"C SPARE.
13. PROVIDE 4"C FOR FUTURE DATA.
14. CONNECT SPORT LIGHTING CONTROL PANEL.
15. PROVIDE 2"C WITH SPORT LIGHTING CONTROL CABLING, 1-1/2"C FOR SCOREBOARD FIBER, & 2"C SPARE TO PRESSBOX.
16. PROVIDE 1-1/2"C FOR SCOREBOARD FIBER.
17. PROVIDE 2"C WITH SEARCH LIGHTS CONTROL CABLE TO PRESSBOX. VERIFY EXACT REQUIREMENTS.
18. LOCATED IN ELECTRICAL ROOM OF BUILDING N.
19. PROVIDE 1"C W/ CONTROL CABLE TO PRESSBOX FROM SPOTLIGHT CONTROL PANEL 'SLCP', VERIFY EXACT REQUIREMENTS WITH SPOTLIGHT SYSTEM SUPPLIER.

PBK
www.pbk.com
559-448-8400
FRESNO, CA

PARLIER HS STADIUM REPLACEMENT

603 3rd Street
Parlier, CA 93648

CLIENT PROJECT NO: 250093
DSA SUBMISSION
DSA APPL. NO.: 02-124002 DSA FILE NO.: 10-H12

PARLIER UNIFIED SCHOOL DISTRICT

REGISTERED PROFESSIONAL ENGINEER
R.J. HARDIN
NO. 9125
ELECTRICAL
STATE OF CALIFORNIA

CLIENT	
PARLIER UNIFIED SCHOOL DISTRICT	
DATE YYYY/MM/DD	PROJECT NUMBER 250093

DRAWING HISTORY

No.	Description	Date
1	RFI #003	05/07/2026
2	ADDENDUM #3	05/08/2026
3	ADDENDUM #4	06/12/2026

CHECKED BY: HDE
DRAWN BY: HDE

SITE DATA/COMM

ES1.3

Plot Stamp:
6/22/2026 9:21:06 AM

ELECTRICAL PLANS - BUILDING M
EM1.0
FOR BLUEBEAM LABELING/OCR:

0"
1"

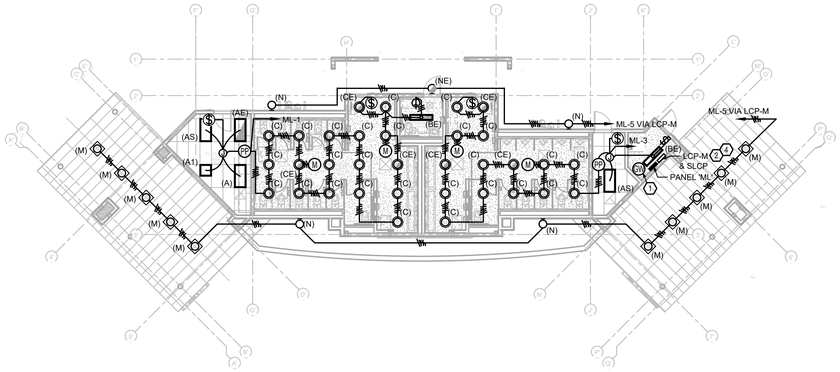

1 BUILDING M - LIGHTING
SCALE: 3/32" = 1'-0"

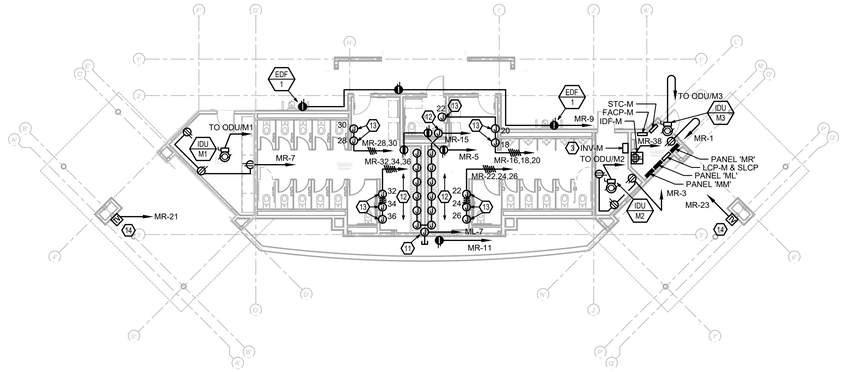

2 BUILDING M - POWER
SCALE: 3/32" = 1'-0"

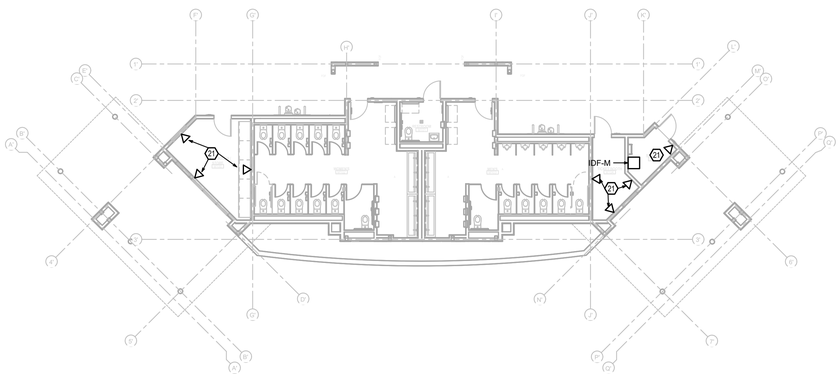

3 BUILDING M - DATA/COMM
SCALE: 3/32" = 1'-0"

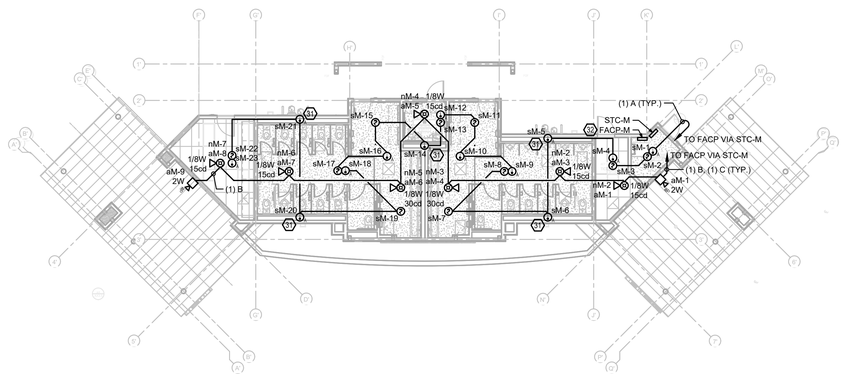

4 BUILDING M - FIRE ALARM
SCALE: 3/32" = 1'-0"

KEYNOTES

1. nLIGHT DIGITAL GATEWAY.
2. nLIGHT RELAY PANEL.
3. IIS 550 HE EMERGENCY INVERTER MOUNTED PER DETAIL 6/EX.1.4.
4. SPOTLIGHT CONTROL PANEL 'SLCP' MOUNTED ABOVE. VERIFY EXACT REQUIREMENTS WITH SEARCH LIGHT SYSTEM SUPPLIER.
11. W.P. J-BOX W/ 3/4"C TO EXTERIOR SIGNAGE. VERIFY VOLTAGE & LOCATION WITH SIGN CONTRACTOR PRIOR TO CUTTING BOX IN. CONNECT TO LCP FOR LIGHTING CONTROLS & PROGRAM PER DISTRICT REQUIREMENTS.
12. CONNECT SINK SENSOR, 120V 1Ø.
13. CONNECT HAND DRYER, 1725W 120V 1Ø.
14. PROVIDE DUPLEX GFCI OUTLET FOR TELEVISION. PROVIDE 4-11/16" BOX WITH ONE GANG RING, 1-1/4"C TO CEILING SPACE, & (2) CAT6 CABLES TO IDF. VERIFY HEIGHTS OF OUTLETS WITH DISTRICT.
21. PROVIDE DATA/VOIP OUTLETS PER SYMBOL SCHEDULE.
31. PROVIDE ACCESS PANEL FOR HEAT SENSOR IN PLUMBING CHASE.
32. FACP MOUNTED PER DETAIL 1/EX1.3.

PBK
www.pbk.com
559-448-8400
FRESNO, CA

PARLIER HS STADIUM REPLACEMENT

603 3rd Street
Parlier, CA 93648

CLIENT PROJECT NO: 250093
DSA SUBMISSION
DSA APPL. NO. - 02-124002 DSA FILE NO. : 10-H12

PARLIER UNIFIED SCHOOL DISTRICT

REGISTERED PROFESSIONAL ENGINEER
R.J.HARDIN
NO. 9125
ELECTRICAL
STATE OF CALIFORNIA

CLIENT	
PARLIER UNIFIED SCHOOL DISTRICT	
DATE YYYY/MM/DD	PROJECT NUMBER 250093

DRAWING HISTORY

No.	Description	Date
1	RFI #003	06/03/2026
2	ADDENDUM #3	06/09/2026
3	ADDENDUM #4	06/12/2026

CHECKED BY: HDE
DRAWN BY: HDE

ELECTRICAL PLANS - BUILDING M

EM1.0

Plot Stamp:
6/22/2026 9:21:06 AM

0"
1"

ELECTRICAL PLANS - BUILDING M
EM1.1
FOR BLUEBEAM LABELING/OCR:

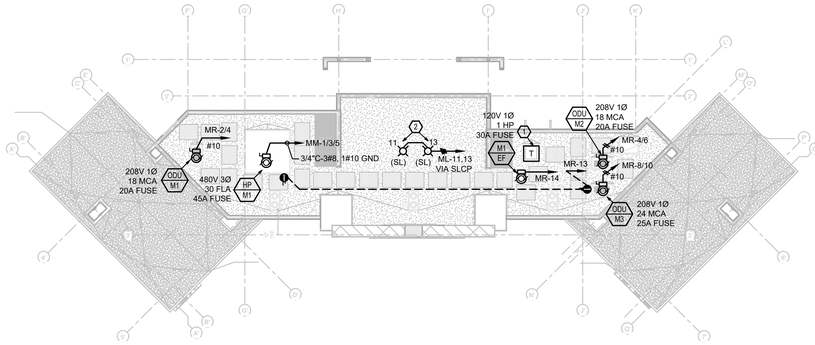

1 BUILDING M - ROOF
SCALE: 3/32" = 1'-0"

KEYNOTES (#)

1. 30 KVA ROOF MOUNTED TRANSFORMER MOUNTED PER DETAIL 9/EX1.2.
2. ROOF-MOUNTED SPOTLIGHT. VERIFY EXACT REQUIREMENTS WITH SPOTLIGHT SYSTEM SUPPLIER.

PBK
FRESNO, CA
559-448-8400
www.pbk.com

PARLIER HS STADIUM REPLACEMENT

603 3rd Street
Parlier, CA 93648

CLIENT PROJECT NO: 250093
DSA SUBMISSION
DSA APPL. NO. : 02-124002 DSA FILE NO. : 10-H12

PARLIER UNIFIED SCHOOL DISTRICT

REGISTERED PROFESSIONAL ENGINEER
R.J. HARDIN
No. 9125
ELECTRICAL
STATE OF CALIFORNIA

CLIENT	
PARLIER UNIFIED SCHOOL DISTRICT	
DATE	PROJECT NUMBER
YYYY/MM/DD	250093

DRAWING HISTORY

No.	Description	Date
1	RFI #003	06/03/2026
2	ADDENDUM #3	06/08/2026
3	ADDENDUM #4	06/12/2026

CHECKED BY: HDE
DRAWN BY: HDE

ELECTRICAL PLANS - BUILDING M

EM1.1

Plot Stamp:
6/22/2026 9:21:06 AM

ELECTRICAL PLANS - BUILDING N
EN1.0
FOR BLUEBEAM LABELING/OCR:

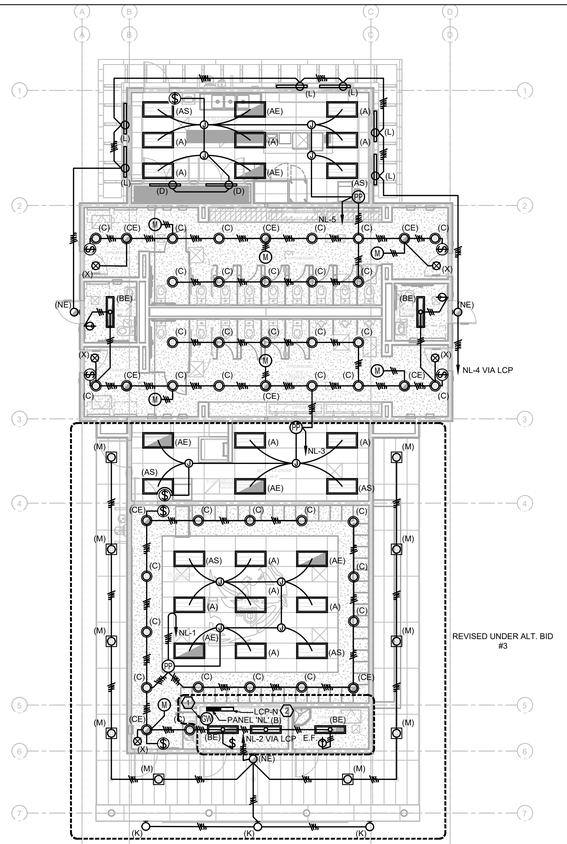

REVISED UNDER ALT. BID #3

1 BUILDING N - LIGHTING
SCALE: 1/8" = 1'-0"

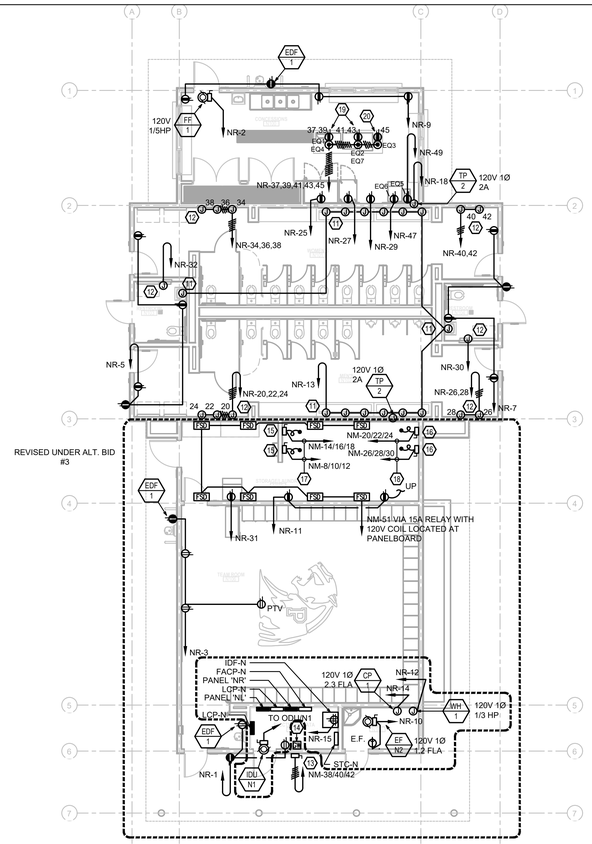

REVISED UNDER ALT. BID #3

2 BUILDING N - POWER
SCALE: 1/8" = 1'-0"

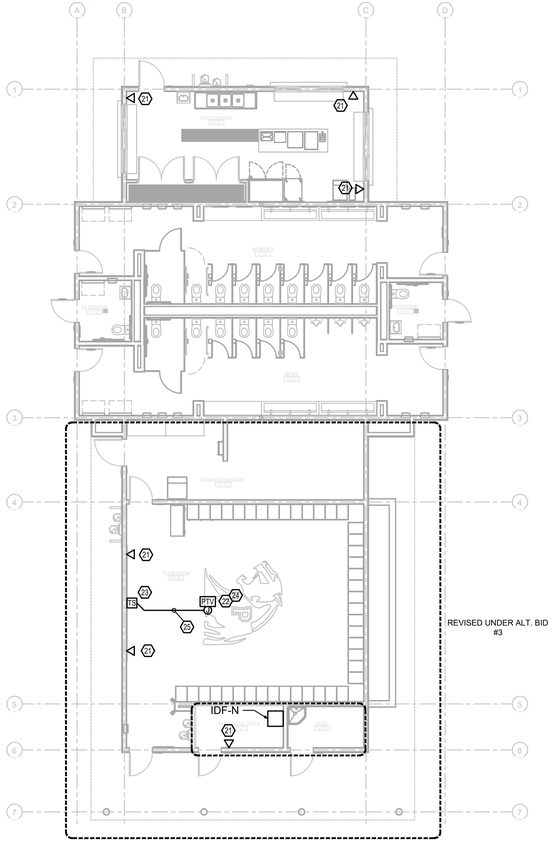

REVISED UNDER ALT. BID #3

3 BUILDING N - DATA/COMM
SCALE: 1/8" = 1'-0"

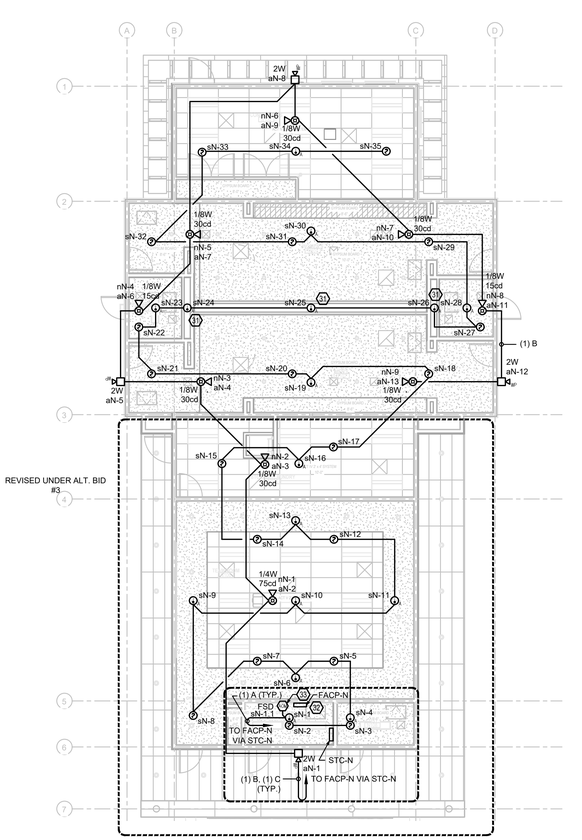

REVISED UNDER ALT. BID #3

4 BUILDING N - FIRE ALARM
SCALE: 1/8" = 1'-0"

KEYNOTES (F)

1. nLIGHT WIRELESS GATEWAY.
2. nLIGHT RELAY PANEL.
11. CONNECT SINK SENSOR, 120V 1Ø.
12. CONNECT HAND DRYER, 1725W, 120V 1Ø.
13. PV DISCONNECT, SEE EN1.1.
14. YOTTA #ECU-R AND #SL-GW GATEWAYS MOUNTED IN ELECTRICAL ROOM. CONNECT TO IDF.
15. CONNECT LAUNDRY DRYER, 37 FLA, 480V 3Ø .
16. CONNECT LAUNDRY WASHER, 26 A, 480V 3Ø.
17. 3/4"C-3#8, 1#10 GND.
18. 3/4"C-3#10,1#10 GND.
19. 2-POLE GFCI RECEPTACLE IN SINGLE GANG WP FLUSH FLOOR-BOX, COORDINATE LOCATION WITH ARCHITECT PRIOR TO INSTALLATION.
20. 1-POLE GFCI RECEPTACLE IN SINGLE GANG WP FLUSH FLOOR-BOX, COORDINATE LOCATION WITH ARCHITECT PRIOR TO INSTALLATION.
21. PROVIDE DATA/VOIP PER SYMBOL SCHEDULE.
22. AV SYSTEM CEILING PROJECTOR.
23. AV SYSTEM WALL PLATE WITH VIDEO JACK.
24. TV/AV COMBO OUTLET AT CEILING. COORDINATE EXACT LOCATION WITH MOUNTING BRACKET PRIOR TO ROUGH-IN. PROVIDE TWO CAT6A & HDMI CABLES AND JACKS IN FOUR PORT SINGLE GANG PLATE. OUTLET BOX SHALL BE 5s TYPE 2-7/8" DP., 2G TRIM RING, ONE 1-1/4"C AND ONE 1"C TO ACCESSIBLE CEILING SPACE.
25. 1"C - HDMI CABLE
31. PROVIDE ACCESS PANEL FOR HEAT SENSOR IN PLUMBING CHASE.
32. FACP MOUNTED PER DETAIL 1/EX1.3.
33. FIRE ALARM RELAY MODULE. CONNECT TO 30A RELAY TO CONTROL FIRE/SMOKE DAMPERS.

SNACKBAR EQUIPMENT LIST

EQ#	EQUIPMENT	V	P	KW	A
1	HOT DOG STEAMER	120	1	1.3	
2	POPCORN POPPER	120	1	1.92	
3	FOOD TOPPING WARMER	120	1	0.517	4.3
4	MICROWAVE OVEN	120	1	1.5	13
5	COFFEE BREWER	120	1	1.37	11
6	SODA ICE & BEVERAGE DISPENSER	120	1	360	3
7	PIZZA DISPLAY WARMER	120	1	1.7	14

PBK
FRESNO, CA
559-448-8400
www.pbk.com

PARLIER HS STADIUM REPLACEMENT
603 3rd Street
Parlier, CA 93648
CLIENT PROJECT NO: 250093
DSA SUBMISSION
DSA APPL. NO.: 02-124002 DSA FILE NO.: 10-H12

PARLIER UNIFIED SCHOOL DISTRICT

REGISTERED PROFESSIONAL ENGINEER R.J. HARDIN NO. 9125 ELECTRICAL STATE OF CALIFORNIA

CLIENT	
PARLIER UNIFIED SCHOOL DISTRICT	
DATE	PROJECT NUMBER
YYYY/MM/DD	250093

DRAWING HISTORY

No.	Description	Date
1	RFI #003	06/03/2026
2	ADDENDUM #3	06/08/2026
3	ADDENDUM #4	06/12/2026

CHECKED BY: HDE
DRAWN BY: HDE

ELECTRICAL PLANS - BUILDING N

EN1.0

Plot Stamp:
6/22/2026 9:21:06 AM

0"
1"

ELECTRICAL PLANS - BUILDING N
EN1.1
FOR BLUEBEAM LABELING/OCR:

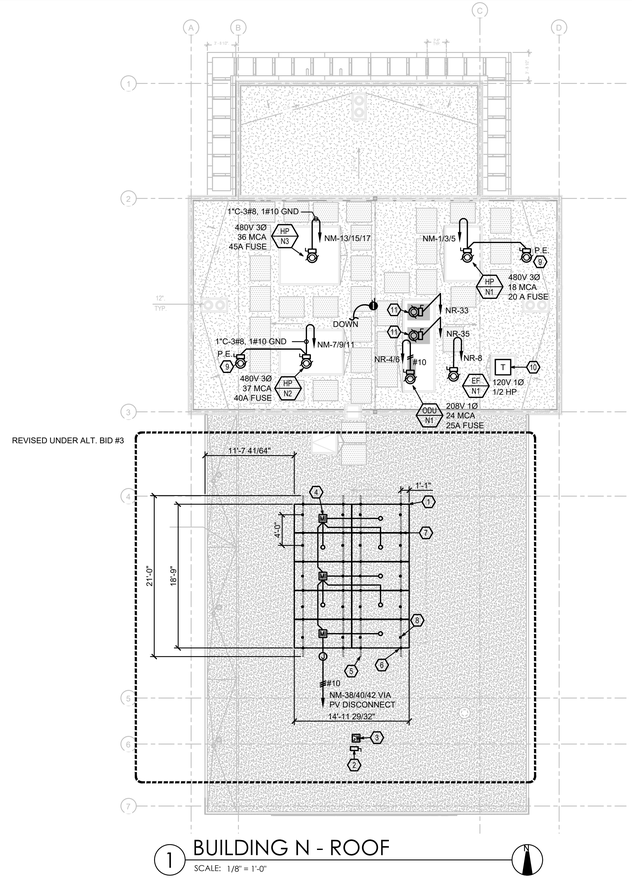

REVISED UNDER ALT. BID #3

1 BUILDING N - ROOF
SCALE: 1/8" = 1'-0"

NOTE:
CONDUIT SHALL BE RUN TO EQUIPMENT BELOW THE ROOF. HORIZONTAL RUNS OF CONDUIT ABOVE THE ROOF IS NOT ALLOWED.

REVISED UNDER ALT. BID #3

REVISED UNDER ALT. BID #3

KEYNOTES (F)

1. (10) CS6W-600TB-AG PV PANEL ARRAY ((10) PANELS PER MPPT), 6.0kWP/dc.
   DIMS: 89.7"H x 44.6"W x 1.2"D; WT: 71.2 LBS. WEB/FLANGE DIMENSIONS & MATERIAL TYPE PER PV CUTSHEET 1/EX2.2.
   UPLIFT FORCE: 35.5 PSF.
   DOWNWARD FORCE: 2.56 PSF DL + 16.0 PSF WL.
   SEE CONNECTION DETAIL 3/EX.2.0.
2. SOLAR SYSTEM AC DISCONNECT LOCATED ON EXTERIOR WALL OF ELECTRICAL ROOM.
3. YOTTA #ECU-R AND #SL-GW GATEWAYS MOUNTED IN ELECTRICAL ROOM. CONNECT TO IDF.
4. TYPICAL YOTTA #DPI-208 MICROINVERTER MOUNTED TO RAIL, BOLT TORQUE TO BE 10 FT-LBS. CONNECT BATTERY MODULES USING FACTORY CORDS. CONNECT (3) MICROINVERTERS TOGETHER USING FACTORY CORDS. DIMS: 14"W x 9.5" L x 1.8"D; WT: 13.0 LBS.
5. TYPICAL UNIRAC NXT UMOUNT HD RAIL. BOND RAILS TO GROUND. SEE CONNECTION DETAIL 3/EX.2.0.
6. TYPICAL UNIRAC NXT UMOUNT COMBO CLAMP WITH END CAP AT END OF MODULE. SEE CONNECTION DETAIL 3/EX.2.0. ALLOWABLE RANGE OF COMPONENT SHALL BE BE BETWEEN 12" & 23" FROM SHORT SIDE OF PV MODULE. ENDS OF MODULES SHALL HAVE AT LEAST 2" OF RAIL OVERHANG.
7. TYPICAL UNIRAC NXT UMOUNT COMBO CLAMP BETWEEN PV MODULES. SEE CONNECTION DETAIL 3/EX.2.0. ALLOWABLE RANGE OF COMPONENT SHALL BE BETWEEN 12" & 23" FROM SHORT SIDE OF PV MODULE. EACH MODULE SHALL HAVE A SPACE 0.5" BETWEEN EACH MODULE TO ALLOW FOR CLAMP.
8. TYPICAL UNIRAC STRONGHOLD BUTYL ATTACHMENT ASSEMBLY PER DETAIL 3/EX.2.0.
9. TAP LINE SIDE OF HVAC UNIT DISCONNECT TO POWERED EXHAUST DISCONNECT.
10. 75 KVA ROOF MOUNTED TRANSFORMER MOUNTED PER DETAIL 9/EX1.2.
11. ROOF-MOUNTED REMOTE ICE CONDENSER,1.82A, 120V 1Ø.

PBK
www.pbk.com
559-448-8400
FRESNO, CA

PARLIER HS STADIUM REPLACEMENT

603 3rd Street
Parlier, CA 93648

CLIENT PROJECT NO: 250093
DSA SUBMISSION
DSA APPL. NO.: 02-124002 DSA FILE NO.: 10-H12

PARLIER UNIFIED SCHOOL DISTRICT

REGISTERED PROFESSIONAL ENGINEER
R.J.HARDIN
NO. 9125
ELECTRICAL
STATE OF CALIFORNIA

CLIENT	
PARLIER UNIFIED SCHOOL DISTRICT	
DATE: YYYY/MM/DD	PROJECT NUMBER: 250093

DRAWING HISTORY

No.	Description	Date
1	RFI #003	06/03/2026
2	ADDENDUM #3	06/08/2026
3	ADDENDUM #4	06/12/2026

CHECKED BY: HDE
DRAWN BY: HDE

ELECTRICAL PLANS - BUILDING N

EN1.1

Plot Stamp:
6/22/2026 9:21:06 AM

ELECTRICAL PLANS - BUILDING N ALT. BID #3
EN1.2
FOR BLUEBEAM LABELING/OCR:

0"
1"

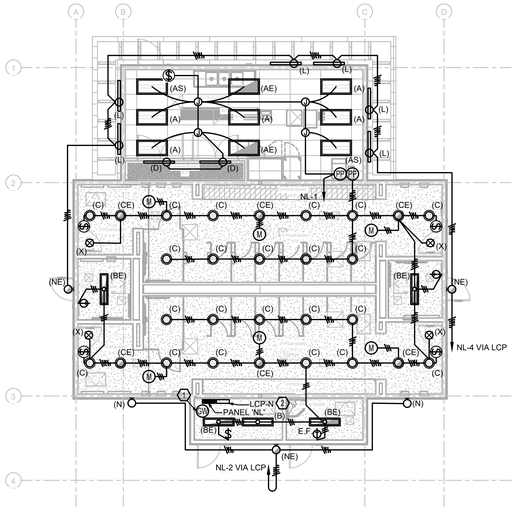

1 BUILDING N - LIGHTING
SCALE: 1/8" = 1'-0"

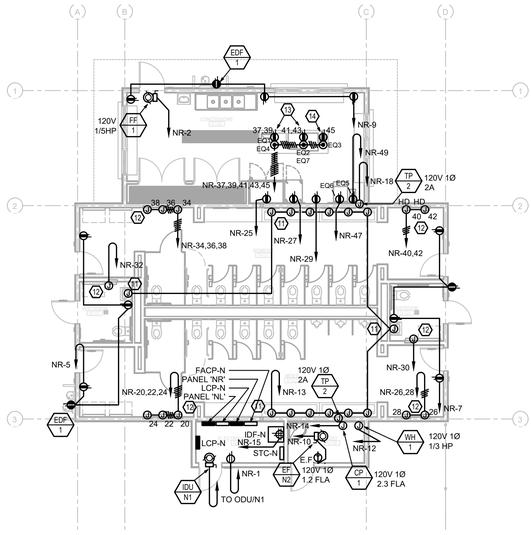

2 BUILDING N - POWER
SCALE: 1/8" = 1'-0"

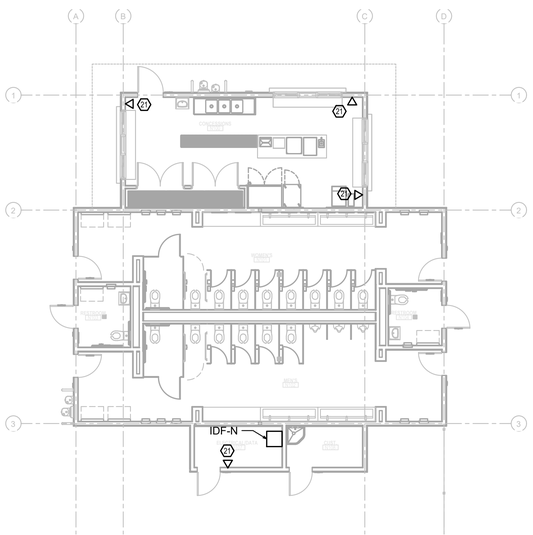

3 BUILDING N - DATA/COMM
SCALE: 1/8" = 1'-0"

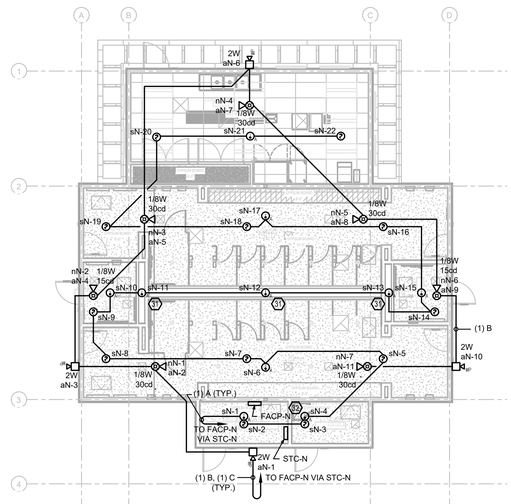

4 BUILDING N - FIRE ALARM
SCALE: 1/8" = 1'-0"

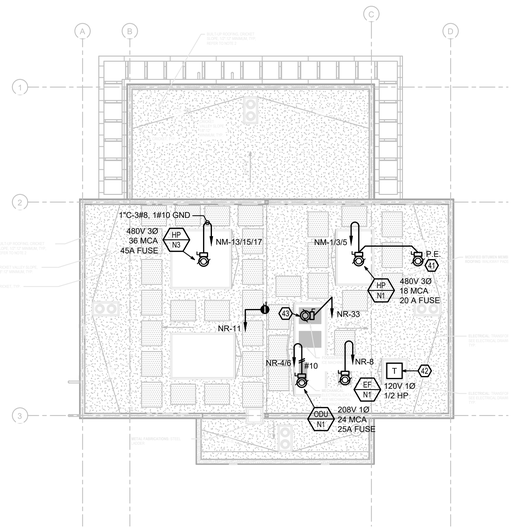

5 BUILDING N - ROOF
SCALE: 1/8" = 1'-0"

KEYNOTES

1. nLIGHT WIRELESS GATEWAY.
2. nLIGHT RELAY PANEL.
11. CONNECT SINK SENSOR, 120V 1Ø.
12. CONNECT HAND DRYER, 1725W, 120V 1Ø.
13. 2-POLE GFCI RECEPTACLE IN SINGLE GANG WP FLUSH FLOOR-BOX, COORDINATE LOCATION WITH ARCHITECT PRIOR TO INSTALLATION.
14. 1-POLE GFCI RECEPTACLE IN SINGLE GANG WP FLUSH FLOOR-BOX, COORDINATE LOCATION WITH ARCHITECT PRIOR TO INSTALLATION.
21. PROVIDE DATA/VOIP PER SYMBOL SCHEDULE.
31. PROVIDE ACCESS PANEL FOR HEAT SENSOR IN PLUMBING CHASE.
32. FACP MOUNTED PER DETAIL 1/EX1.3.
41. TAP LINE SIDE OF HVAC UNIT DISCONNECT TO POWERED EXHAUST DISCONNECT.
42. 75 KVA ROOF MOUNTED TRANSFORMER MOUNTED PER DETAIL 9/EX1.2.
43. ROOF-MOUNTED REMOTE ICE CONDENSER,1.82A, 120V 1Ø.

SNACKBAR EQUIPMENT LIST

EQ#	EQUIPMENT	V	P	KW	A
1	HOT DOG STEAMER	120	1	1.3	
2	POPCORN POPPER	120	1	1.92	
3	FOOD TOPPING WARMER	120	1	0.517	4.3
4	MICROWAVE OVEN	120	1	1.5	13
5	COFFEE BREWER	120	1	1.37	11
6	SODA ICE & BEVERAGE DISPENSER	120	1	360	3
7	PIZZA DISPLAY WARMER	120	1	1.7	14

PBK
www.pbk.com
559-448-8400
FRESNO, CA

PARLIER HS STADIUM REPLACEMENT
603 3rd Street
Parlier, CA 93648

CLIENT PROJECT NO: 250093
DSA SUBMISSION
DSA APPL. NO.: 02-124002 DSA FILE NO.: 10-H12

PARLIER UNIFIED SCHOOL DISTRICT

REGISTERED PROFESSIONAL ENGINEER R.J.HARDIN No. 9125 ELECTRICAL STATE OF CALIFORNIA

CLIENT	
PARLIER UNIFIED SCHOOL DISTRICT	
DATE	PROJECT NUMBER
YYYY/MM/DD	250093

DRAWING HISTORY

No.	Description	Date
1	RFI #003	06/03/2026
2	ADDENDUM #3	06/09/2026
3	ADDENDUM #4	06/12/2026

CHECKED BY: HDE
DRAWN BY: HDE

ELECTRICAL PLANS - BUILDING N ALT. BID #3

EN1.2

Plot Stamp:
6/22/2026 9:21:06 AM

ELECTRICAL PLANS - PRESSBOX
EP1.0
FOR BLUEBEAM LABELING/OCR:

0"
1"

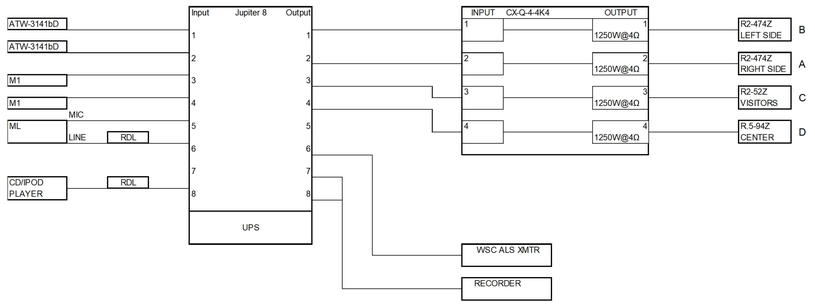

QTY	Brand	Model	Description
1	Symetrix	Jupiter 8	8x8 mixer/DSP
1	Symetrix	ARC-K1e	adaptive remote control 1G wall plate; 1x rotary encoder
1	Symetrix	ARC-EX4e	adaptive remote control 1G wall plate; 4x buttons
2	Audio-Technica	ATW-3141bD	handheld wireless microphone system
1	Audio-Technica	AT8630	joining plate (mounts two 3000 rec'ts in 1RU)
1	Audio-Technica	ATW-DA49	antenna distribtution system
1	Audio-Technica	ATW-A3D	pair; half-wave remote antennas
2	Audio-Technica	AC25	25' RB8 BNC-to-BNC cable
2	Audio-Technica	AT8666RSP	mic stand with programmable switch
2	Audio-Technica	ES915C15	cardioid condenser gooseneck mic
1	Audio-Technica	ATM510	dynamic handheld microphone
1	Audio-Technica	AT8314-25	microphone cable
1	FSR	IPS-WP1S	1-gang aluminum wall plate with 1 IPS opening
1	FSR	IPS-A611D	XLR 3-pin female to solder
1	FSR	IPS-A221S-LB	dual RCA (red/white) to solder
1	FSR	IPS-A510S-LB	3.5mm mini stereo to solder
2	Atlas Sound	SG-XLR-F1	stainless steel plate with one XLR female connector
4	Atlas Sound	AP-S20	20A power conditioner and distribution; 1RU
4	Atlas Sound	CB-1	1RU blank rack panel
1	Atlas Sound	WMA24-23	36RU wall mount rack
1	Atlas Sound	SFD24	36RU solid front door for WMA16-23
1	Williams Sound	PPA 457 PRO	assitive listening system w/ 4x receivers
64	Williams Sound	PPA R37	bodypack receivers; belt clip, batteriers, earphone
16	Williams Sound	NKL 001	18" neckloop
1	Williams Sound	ANT 024	wall-mount remote antenna
1	QSC Audio	CX-Q-4K4	four-channel power amplifier; 1000W/Ch@8ohms
2	Community	R2-474Z	loudspeaker
1	Community	R2-52Z	loudspeaker
1	Community	R.5-94Z	loudspeaker
1	Tascam	CD-200iL	CD player/iPod dock/Blue tooth
1	Tascam	SS-CDR200	solid state/CD recorder
1	Whirlwind USA	custom 3RU panel	1x 2G cut-out; 1x 1G cutout
2	RDL	STD-600	passive stereo to mono summer
1	Tripplite	SUI500RTXLCD2U	UPS 120V
1	APC	UPS SRT 5000VA SERIES	UPSA 208V

NOTE:
THE EMERGENCY EVACUATION SOUND SYSTEM SHALL BE COMPLETE AND OPERATING WITH ALL REQUIRED EQUIPMENT, APPURTENANCES, UPS, SET-UP & TESTING, & BALANCING. PROVIDE CURRENT MODEL OF ALL EQUIPMENT ITEMS THAT HAVE BEEN DISCONTINUED. EMERGENCY ANNOUNCEMENT SYSTEM SHALL CONFORM TO THE REQUIREMENTS OF CBC 907.5.2.2.4., NFPA 72 SECTION 24, & CBC 1203.

RU	
1	AP-S20
2	PPA-T45
3	ATW-DA49
4	2x ATW-3141bD
5	custom 3RU panel
6	for ARC-K1e & ARC-EX4e
7	and FSR mic/line plate
8	CB1
9	
10	CD0200iL
11	CB1
12	SS-CDR200
13	CB1
14	Jupiter 8
15	CB1
16	
17	SD2-14
18	CB1
19	
20	CXD4.5
22	
24	UPS
25	
26	
27	UPSA
28	
29	

NOTE:
SPLIT RACK INTO TWO SECTIONS TO FIT UNDER COUNTER.

KEYNOTES (F)

1. CONNECT PRESSBOX PANEL 'PB'. PROVIDE (1) 30A/2P & (3) 20A/1P CIRCUIT BREAKERS.
2. PROVIDE 1-1/4"C-(4) 'S' CABLES.
3. PROVIDE UPS & UPSA IN SOUND RACK FOR EMERGENCY ANNOUNCEMENT. (UPSA MAY BE AN ADJACENT TOWER).
4. PROVIDE WALL IDF DATA RACK. PROVIDE FIBER TERMINATION UNIT, UPS, SPACE FOR LAN SWITCHES, & 24 PORT CAT 6 PATCH PANEL. LOCATE UNDER PRESSBOX COUNTER. TWO RACKS MAY BE REQUIRED. VERIFY EXACT LOCATION WITH ARCHITECT & OWNER PRIOR TO INSTALLATION.
5. PROVIDE DATA OUTLETS PER SYMBOL SCHEDULE. VERIFY LOCATION
6. PROVIDE SOUND SYSTEM RACK 'SR'. LOCATE UNDER PRESSBOX COUNTER. TWO RACKS MAY BE REQUIRED. VERIFY EXACT LOCATION WITH ARCHITECT & OWNER PRIOR TO INSTALLATION.
7. PROVIDE SIDE THROW SPEAKER ON ROOF.
8. PROVIDE CENTER THROW SPEAKER ON ROOF.
9. PROVIDE VISITORS THROW SPEAKER ON ROOF.
10. PROVIDE MICROPHONE OUTLET.
11. CONNECT WEATHER STATION ON ROOF. VERIFY EXACT REQUIREMENTS.
12. CONNECT GAME CLOCK CONTROL CONSOLE WITH WIRELESS DATA COMMUNICATION, 120V 1Ø.

1 EMERGENCY ANNOUNCEMENT & EVACUATION SOUND SYSTEM LINE DIAGRAM
SCALE: NO SCALE

2 EMERGENCY ANNOUNCEMENT & EVACUATION SOUND SYSTEM EQUIPMENT LIST
SCALE: NO SCALE

3 SOUND SYSTEM EQUIPMENT RACK ELEVATION
SCALE: NO SCALE

CABLE SCHEDULE:

F	6 FIBER OPTIC, MUTLI-MODE, DATA CABLE
C	4PAIR, 24AWG, CAT6, DATA CABLE
M	MICROPHONE CABLE
S	12/2 SPEAKER CABLE

GRANDSTAND ASSISTIVE LISTENING SYSTEM CALCULATION

OCCUPANTS	=	4136	(3141 HOME, 995 VISITORS)
RECEIVERS	=	166	
NECK LOOPS	=	42	

4 CABLE SCHEDULE
SCALE: NO SCALE

5 GRANDSTAND ASSISTIVE LISTENING SYSTEM CALCULATION
SCALE: NO SCALE

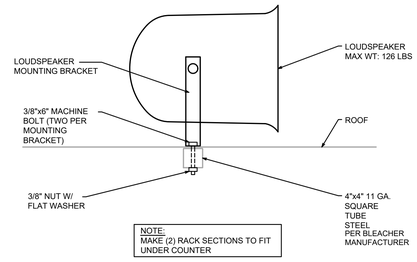

6 LOUDSPEAKER MOUNTING DETAIL
SCALE: NO SCALE

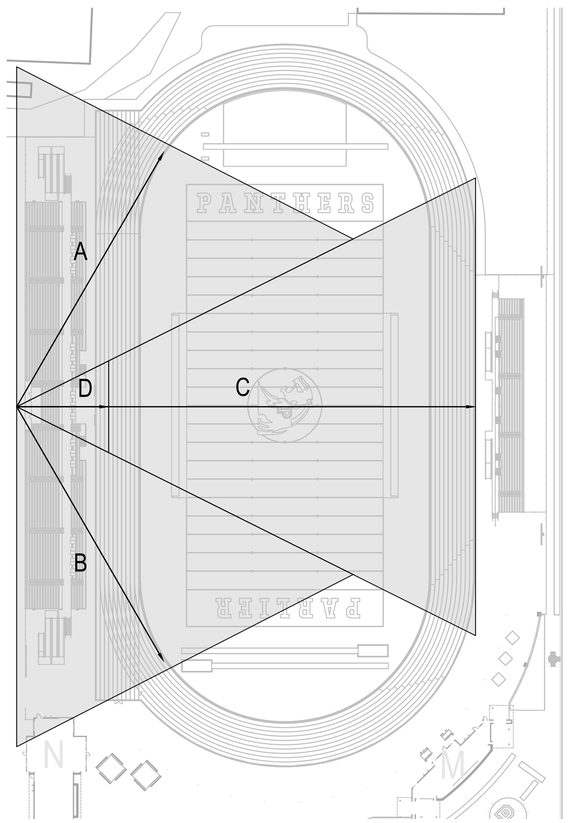

7 SOUND SYSTEM COVERAGE PLAN
SCALE: 1" = 50'-0"

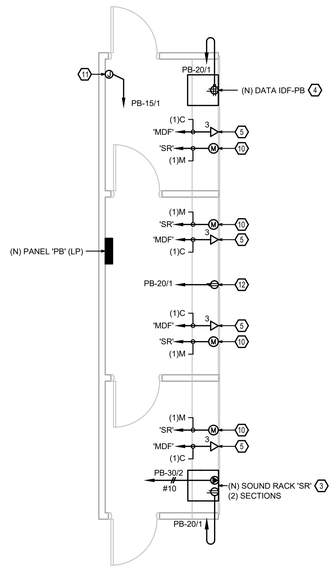

8 PRESS BOX SOUND SYSTEM ELECTRICAL PLAN
SCALE: 1/4" = 1'-0"

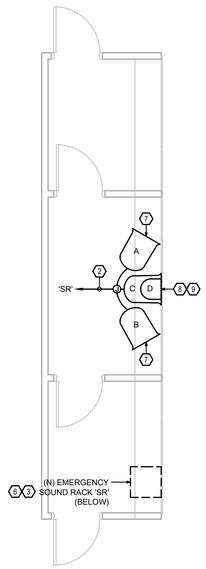

9 PRESS BOX ROOF ELECTRICAL PLAN
SCALE: 1/4" = 1'-0"

PBK
FRESNO, CA
559-448-8400
www.pbk.com

PARLIER HS STADIUM REPLACEMENT

603 3rd Street
Parlier CA 93648

CLIENT PROJECT NO: 250093
DSA SUBMISSION
DSA APPL. NO.: 02-124002 DSA FILE NO.: 10-H12

PARLIER UNIFIED SCHOOL DISTRICT

REGISTERED PROFESSIONAL ENGINEER
R.J. HARDIN
NO. 9125
ELECTRICAL
STATE OF CALIFORNIA

CLIENT	
PARLIER UNIFIED SCHOOL DISTRICT	
DATE YYYY/MM/DD	PROJECT NUMBER 250093

DRAWING HISTORY

No.	Description	Date
2	RFI #003	06/03/2026
3	ADDENDUM #3	06/08/2026
4	ADDENDUM #4	06/12/2026

CHECKED BY: HDE
DRAWN BY: HDE

ELECTRICAL PLANS - PRESSBOX

EP1.0

Plot Stamp:
6/22/2026 9:21:06 AM

NOTES, FOUNDATION DETAIL
MT1
FOR BLUEBEAM LABELING/OCR:

0"
1"

GENERAL NOTES:

APPLICABLE BUILDING CODE

All construction and workmanship shall conform to the 2025 California Building Code, California Code of Regulations – Title 24, Parts 1 & 2.

This pole and foundation standard has been designed for lateral loads on the completed structure as follows:

Wind Design Data:
- Vult = 94 MPH (Exposure C); Vasd = 72 MPH (Exposure C)
- Risk Category = II
- See Pole Foundation Schedule for maximum pole wind forces.

Seismic Design Data:
- Ie = 1.0
- Risk Category = II (Self Supporting Poles)
- S_s = 0.63
- S_1 = 0.22
- Site Class = D
- S_{ms} =0.62
- S_{DS} = 0.40
- Seismic Design Category = D
- Basic Seismic-Force-Resisting System = Non-Building Structure, not similar to buildings
- Nonbuilding Structure Type = Steel lighting system support pole structures
- Cs = 0.108 (STRENGTH LEVEL)
- R = 1.5
- Ω = 1.5
- Analysis Procedure = Equivalent Lateral Force Procedure
- See Pole Foundation Schedule for maximum pole seismic forces.

GENERAL CONSTRUCTION

These notes shall be used in conjunction with the plans and any discrepancies shall be brought to the attention of the Registered Design Professional (RDP) in Responsible Charge.

Contractor must check all dimensions, clearances and job conditions before starting work. The RDP in Responsible Charge shall be notified immediately of any discrepancies or possible deficiencies.

The drawings and specifications represent the finished structure. All bracing, temporary supports, shoring, etc., is the sole responsibility of the Contractor. Observation visits to the job site by the RDP in Responsible Charge do not include inspection of construction procedures. The Contractor is solely responsible for all construction methods and for safety conditions at the worksite. These visits by RDP in Responsible Charge shall not be construed as continuous and detailed inspections.

Design, material, equipment, and products other than those described below or indicated on the drawings may be considered for use, provided prior approval is obtained from the School District, the RDP in Responsible Charge, and DSA.

All changes to the approved plans after a contract for construction has been awarded, affecting structural, access or life-safety portions of the project, shall be made by means of construction change documents (CCD) approved by DSA, as required by Section 4–338, Part 1, Title 24, CCR. All CCD shall be prepared and signed by the RDP in general Responsible Charge.

Substitutions shall be considered as a CCD and shall be approved by DSA prior to fabrication or use.

A Class 2 Project Inspector employed by the School District (Owner) and approved by DSA shall provide continuous inspection of the work, the duties of the Inspector are defined in Section 4–342, Part 1, Title 24, CCR.

All Tests And Inspections shall be performed by an Independent lab employed by the School District and approved by DSA.

Reference pole location on the Architectural, Structural, and/or Electrical drawings for actual pole placement and site location. Pole shall be located 5'–0" min. from adjacent structures below 50'–0" A.G.L., unless noted otherwise.

LIGHT POLE FOUNDATIONS

Reference geotechnical report prepared by Certerra, Dated January 23, 2026 revised January 26, 2026; Project no. 11–252521–0.

Allowable Vertical soil Capacity – 500 PSF (Skin Friction).

Allowable Lateral Bearing capacity: 150 PSF/FT.

A representative of Certerra should be available at the time of the foundation installation to verify the soil design parameters and to provide assistance if any problems arise in foundation installation.

The Contractor must familiarize himself with the complete geotechnical report, and borings and contact the above firm to understand the soil conditions and the possibility of ground water pumping and excavation stabilization or bracing during the foundation installation and placement of concrete.

Soil formations that will require special design considerations or excavation procedures may exist. Pole foundations may need to be reanalyzed according to the soil conditions that exist.

If any discrepancies or inconsistencies arise, notify the RDP in Responsible Charge of such discrepancies.

All piers and concrete must bear on and against firm undisturbed soil as determined by the Geotechnical Engineer.

Place plywood collar around perimeter at the top of foundation excavation to prevent soil from entering pier.

All excavations must be free of loose soil, and debris prior to foundation installation and placement of concrete. Casing or drilling slurry may be required if caving occurs. Review and approval of the Geotechnical Engineer and DSA is required.

All excavations must be free of water or concrete shall be placed by the Tremie Method in accordance with ACI standard 336. Concrete placed by the Tremie Method shall have a minimum ultimate strength of 1,000 PSI greater than required under "Concrete Cast–in–Place" and a maximum slump of 8".

CONCRETE (CAST–IN–PLACE)

Concrete pier foundations with steel reinforcement shall attain a minimum ultimate compressive strength at 28 day test of 3,000 psi. Batch plant inspection not required.

All concrete shall attain a minimum strength of 2,500 psi prior to steel pole erection.

Use Type II/V Portland cement or as directed by the Geotechnical Engineer.

Portland Cement ASTM C–150.

Aggregate ASTM C–33. 1" maximum aggregate size. ⅜" max agg. size not permitted.

Mix in conformance with ASTM C–94, ACI 318 SECTIONS 19.3 and 26.4.

Place concrete immediately after completion of excavation and inspection by the Geotechnical Engineer and the DSA Inspector. Under no circumstances shall piers be allowed to remain open for more than 12 hours without the approval of the Geotechnical Engineer. Excavations shall be covered and protected until filled with concrete.

Concrete shall be placed in one continuous operation (no construction joint) with special equipment to assure a maximum freefall of 5 ft and to prevent concrete from striking the sides of the excavation. Freefall of concrete is unacceptable through water or drilling slurry.

Vibrate concrete full depth, except for concrete with slump greater than 6", then vibrate only upper 10'–0". Concrete placed under water shall have a slump of 6"–8".

STEEL POLE

Steel pole sections conform to the California Code of Regulations T.24, Part 2, Chapter 22A.

All steel conforms to referenced ASTM specifications. (See Pole Data Table for each pole type).

All weldment conforms with AWS D1.1–15 specification for GMAW fillet utilizing E70S–X filler metal or SAW fillet utilizing F7XX–EXXX or F8XX–EXXX filler metal.
GMAW procedure conforms to AWS A5.18.
SAW procedure conforms to AWS A5.23.

Longitudinal seam welds for pole sections shall have 60% minimum penetration; Except longitudinal seam welds on the female section of telescopic field splices shall be full penetration groove welds for a length equal to the minimum splice length plus 6 inches. See drawing number MD1 for seam weld details.

Pole sections hot dipped galvanized to ASTM A123 latest standards.

All miscellaneous structural steel items conform to AISC 360–22.

Steel pole sections shall be assembled in the field by attaching two 1.5 ton "come alongs" to jacking ears, using full effort on each simultaneously, to ensure minimum overlaps as indicated on the "MS" sheet(s) and detail G/MD1.

PRECAST BASE

The precast concrete base conforms to California Code of Regulations, T.24, part 2, Chapter 19A and to Building Code Requirements for Reinforced Concrete, ACI 318–19. Precast bases are an ICC approved product under ESR–3765.

See detail "A" on "MS" sheet(s) for material strengths and specifications.

TESTING AND INSPECTION

Testing and inspection in accordance with Title 24, Part 1 & Part 2 & project DSA 103 form.

EXCAVATIONS & FOUNDATIONS:
Inspection of cast–in–place deep foundations – 1705A.8 & Table 1705A.8

CONCRETE MATERIALS: 1903A.1
Portland cement – 1910A.1
Concrete aggregates – 1903A.5
Reinforcing bars – 1910A.2 & DSA IR 17–10
Prestressing steel and anchorages – 1910A.3

CONCRETE QUALITY:
Proportions of concrete – Reference ACI 318 Section 26.4.3.1 Through 26.4.4.1.
Strength tests of concrete – 1905A.1.17 and ACI 318 Section 26.12 & 26.5.3.2.

CONCRETE INSPECTION: 1705A.3 & Table 1705A.3
Job site – Reference ACI 318 Section 26.5.1,26.5.2.1(a) & (b),26.6.1.2(a), 26.11.1.1(a).
Batch Plant Inspection Not Required – 1705A.3.3.2
Prestressed concrete – 1704A.2.5, 1705A.3.4

STEEL MATERIALS:
Structural steel – 2202A.1 & 2205A.1
Cold formed steel – 2210A.1
Identification – 2202A.1
High strength bolt identification – table 1705A.2.1 & DSA IR 17–9

STEEL QUALITY:
Tests of structural steel & cold formed steel – 2202A.1
Tests of high strength bolts, nuts, & washers – 2213A.1 & DSA IR 17–8

STRUCTURAL STEEL INSPECTIONS: Table 1705A.2.1
Shop fabrication inspection – 1704A2.5
Welding – 1705A.2.5, DSA IR 17–3 and AWS D1.1.
High strength bolt installation – Table 1705A.2.1 & DSA IR 17–9
(Including Skidmore–Wilhelm bolt tension pre–installation verification testing)
(NOTE: ALL WELDING SHALL BE CONTINUOUSLY INSPECTED BY AN AWS CWI CERTIFIED INSPECTOR APPROVED BY DSA)

These plans are for construction approval. An application number and approval of these drawings by the Division of The State Architect of California must be secured to build from these plans.

INDEX OF SHEETS

MT1	NOTES, FOUNDATION DETAIL
MS1	100C POLE DETAILS
MD1	ATTACHMENT DETAILS
MD2	ATTACHMENT DETAILS
MD3	ATTACHMENT DETAILS

POLE ORIENTATION PLAN
N.T.S.

NOTE: THIS PLAN IS A PICTORAL REPRESENTATION OF THE SITE LAYOUT. REFERENCE APPROPRIATE ARCHITECTURAL SITE PLAN FOR ALL NECESSARY INFORMATION.

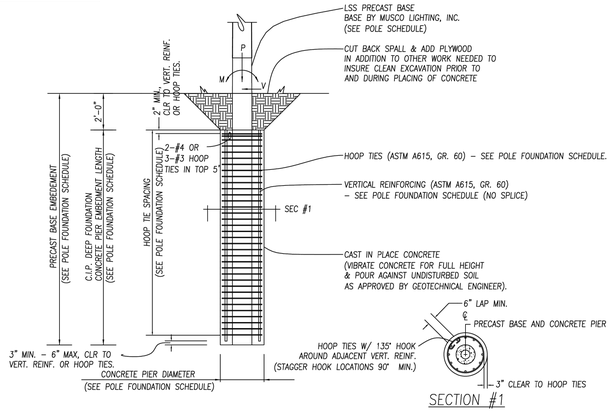

SECTION #1

A REINFORCED FOUNDATION DETAIL
N.T.S. DSA–A2–CASFND_A

POLE FOUNDATION SCHEDULE

POLE TYPE–# OF FIXTURES (MAX) (LSS=LIGHT STRUCTURE)	MARK (SEE POLE ORIENTATION PLAN)	WIND OR SEISMIC (SEISMIC FORCE INCLUDES OVERSTRENGTH FACTOR=1.5)	ASD LEVEL FORCES (MAX)			C.I.P. DEEP FOUNDATION				PRECAST BASE
			MOMENT (M) FT–LBS*	SHEAR (V) LBS	VERTICAL (P) LBS**	DIAMETER INCHES	EMBEDMENT FEET (SEE NOTE BELOW)	VERTICAL REINFORCING (ASTM A615, GR 60)	HOOP TIE SIZE & SPACING (ASTM A615, GR 60)	EMBEDMENT FEET
LSS100C–16	F1–F4	SEISMIC	86,500	1,181	10,431	48"	18'–0"	12–#8	#4 @ 6" O.C. TOP 12'–0" & #4 @ 12" O.C. BELOW	20'–0"
		WIND	221,000	3,162	6,745					

*Moment (M) computed below grade at Shear (V) = 0.
**Vertical (P) load includes steel pole, light fixtures, and attachments. Vertical (P) load for wind is the dressed pole weight for erection purposes. Vertical (P) load for seismic also includes weight of precast base above groundline. Reference Detail "A" on MS Sheet(s) for precast base weight.
Note:
Final Embedment to be determined in the field by the Geotechnical Engineer of Record

Information contained herein is the confidential property of Musco Sports Lighting, LLC and/or its parent companies, affiliates, successors and assigns. Reproduction, distribution, or use of the information other than its limited, intended purpose without express written permission is prohibited.
Musco products referenced or shown are protected by one or more of the following patents. U.S. Patents: 4947303; 4994718; 5075828; 5134557; 5161883; 5211473; 5229681; 5377611; 5398478; 5423281; 5426577; 5600537; 5794387; 5856721; 6036338; 6203176; 6250596; 6340790; 6398392; 6681110; 6833675; 6929385; 6969034; 6988697; 7059572; D337168; D353797; D353911; D411096. Other patents pending.

DSA–TITLE1_E

Parlier High School Football
FIELD LIGHTING
Parlier, CA

REGISTERED PROFESSIONAL ENGINEER * VIRGINIA * No. 45506 Exp. 6–30–27 * STRUCTURAL * STATE OF CALIFORNIA

CONSULTANT
rtm
engineering consultants
1 Addison Street, Suite 405
San Francisco, CA 94131
Tel (415) 421-2500
Fax (415) 421-2508
RTM JOB NO.: 463-869

CORPORATE OFFICE:
P.O. Box 808
211 2nd Avenue West
Oskaloosa, Iowa 52577
800/825–6020

DRAWING TITLE: NOTES, FOUNDATION DETAIL
SCALE: SEE PLAN
REVISIONS
REFERENCES

PROJECT NO. 215070
DATE: 02/05/2026
DRAWN BY: W.Isiminger
DRAWING NO. 1 OF 5 MT1

PBK
www.pbk.com
559-448-8400
FRESNO, CA

PARLIER HS STADIUM REPLACEMENT
603 3rd Street
Parlier, CA 93648
CLIENT PROJECT NO.: 250093
DSA SUBMISSION
DSA APPL. NO.: 02-124002 DSA FILE NO.: 10-H12

PARLIER UNIFIED SCHOOL DISTRICT

REGISTERED PROFESSIONAL ENGINEER R.J. HARDIN No. 9125 ELECTRICAL STATE OF CALIFORNIA

CLIENT: PARLIER UNIFIED SCHOOL DISTRICT
DATE: YYYY/MM/DD
PROJECT NUMBER: 250093

DRAWING HISTORY

No.	Description	Date
1	RFI #003	06/03/2026
2	ADDENDUM #3	06/09/2026
3	ADDENDUM #4	06/12/2026

CHECKED BY: HDE
DRAWN BY: HDE

NOTES, FOUNDATION DETAIL

MT1

Plot Stamp:
6/22/2026 9:21:06 AM

POLE DETAIL
MS1
FOR BLUEBEAM LABELING/OCR:

0"
1"

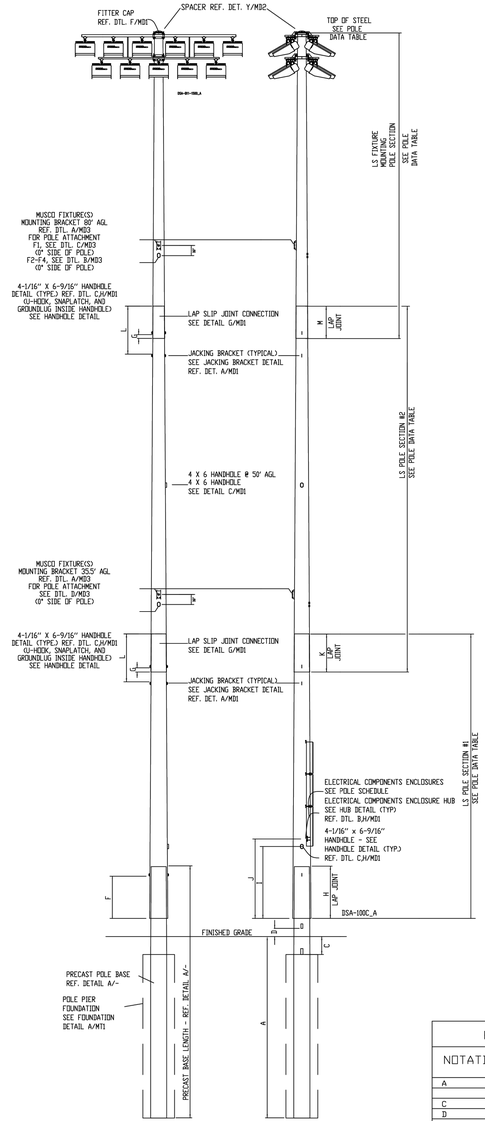

LSS100C POLE FRONT VIEW
N.T.S.

LSS100C POLE SIDE VIEW
N.T.S. DSA-100CBASE_A

POLE DIMENSION TABLE	
NOTATION	DIMENSION LSS100C
A	20'-0"
C	2'-0" NOM.
D	1'-0" NOM.
F	4'-8" NOM.
G	1'-6"
H	6'-0 7/8" NOM. 5'-3 3/4" MIN.
I	7'-11 1/2" NOM.
J	9'-1 1/2" NOM.
K	5'-8 5/8" NOM. 4'-0 3/4" MIN.
L	6'-7 1/2" NOM.
M	4'-7 7/8" NOM. 3'-1 3/8" MIN.

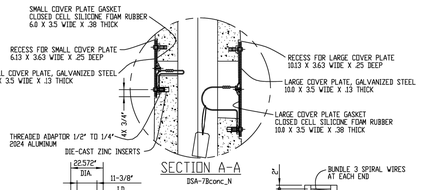

SECTION A-A
DSA-78conc_N

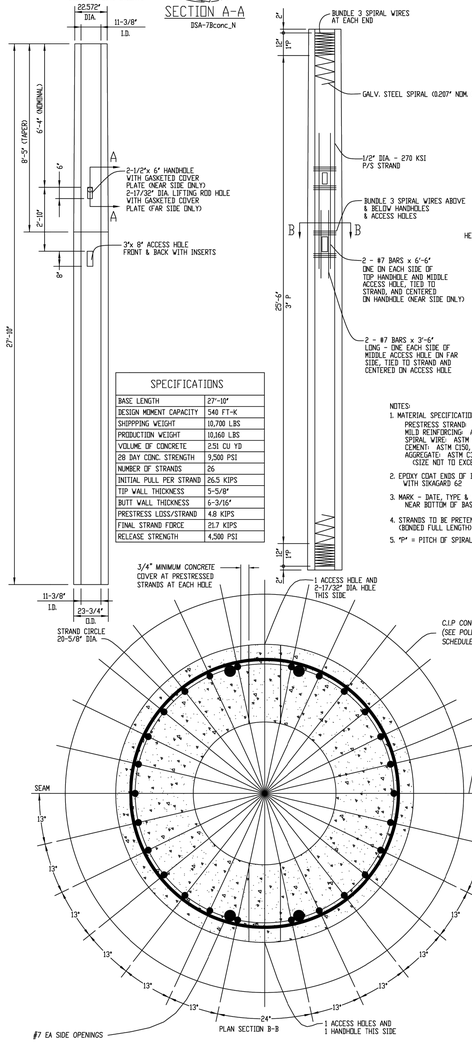

PLAN SECTION B-B

A TYPE 7B PRECAST BASE DETAIL
N.T.S. DSA-78conc_N

SPECIFICATIONS	
BASE LENGTH	27'-10"
DESIGN MOMENT CAPACITY	540 FT-K
SHIPPING WEIGHT	10,700 LBS
PRODUCTION WEIGHT	10,160 LBS
VOLUME OF CONCRETE	2.51 CU YD
28 DAY CONC. STRENGTH	9,500 PSI
NUMBER OF STRANDS	26
INITIAL PULL PER STRAND	26.5 KIPS
TIP WALL THICKNESS	5-5/8"
BUTT WALL THICKNESS	6-3/16"
PRESTRESS LOSS/STRAND	4.8 KIPS
FINAL STRAND FORCE	21.7 KIPS
RELEASE STRENGTH	4,500 PSI

NOTES:
1. MATERIAL SPECIFICATIONS
PRESTRESS STRAND: ASTM A416 GR 270 (LOW RELAXATION)
MILD REINFORCING: ASTM A615 GR 60
SPIRAL WIRE: ASTM A1064 Fy=70 KSI
CEMENT: ASTM C150, TYPE III
AGGREGATE: ASTM C33
(SIZE NOT TO EXCEED 3/4")
2. EPOXY COAT ENDS OF BASE. (T AND B)
WITH SIKAGARD 62
3. MARK - DATE, TYPE & "BOTTOM"
NEAR BOTTOM OF BASE.
4. STRANDS TO BE PRETENSIONED -
(BONDED FULL LENGTH)
5. "P" = PITCH OF SPIRALS

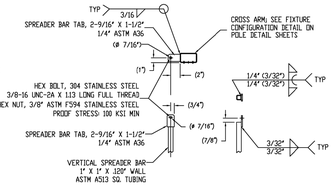

F BOLT ON SPREADER BAR DETAIL
SCALE: N.T.S. DSA-SpreaderBarBoltOn-LED_A

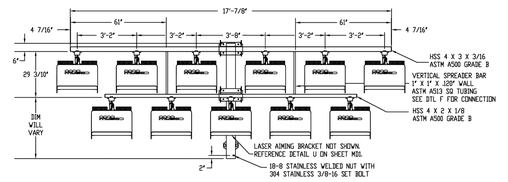

B 11 FIXTURE CONFIGURATION
N.T.S. DSA-B11C-1500_A

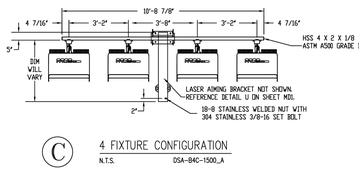

C 4 FIXTURE CONFIGURATION
N.T.S. DSA-B4C-1500_A

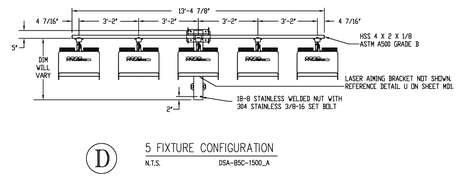

D 5 FIXTURE CONFIGURATION
N.T.S. DSA-B5C-1500_A

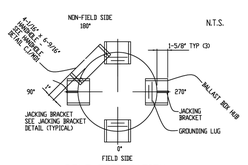

POLE ORIENTATION
N.T.S.

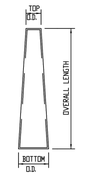

TOP/MIDDLE/BOTTOM
POLE SECTION

1. CONTAINS COMBINED EPA OF LIGHT FIXTURES, CROSS ARM AND MISCELLANEOUS FIXTURE MOUNTING APPARATUS.

FIXTURE WEIGHT 90.2 LBS. THIS INCLUDES THE WEIGHT OF FIXTURE, CROSS ARM & MISC. MOUNTING APPARATUS. ELECTRICAL BALLAST BOX WEIGHT 20 LBS PER FIXTURE SERVICED)

POLE SCHEDULE						
SITE LOCATION	POLE MARK	REFERENCE LOCATION	POLE TYPE	FIXTURE CONFIGURATION	TOTAL EPA[1]	BALLAST BOX REQUIREMENTS
SEE SITE PLAN (BY OTHERS)	F1	SEE POLE ORIENTATION PLAN	LSS100C	11,4-SEE DETAIL B,C/MS1	56.8 SQ. FT.	SEE DETAIL SL,SL,0,P,P/MD1
	F2	SEE POLE ORIENTATION PLAN	LSS100C	11,5-SEE DETAIL B,D/MS1		SEE DETAIL SL,SL,0,0,R,-/MD1
	F3,F4	SEE POLE ORIENTATION PLAN	LSS100C	11 - SEE DETAIL B/MS1		SEE DETAIL SL,SL,0,0,P/MD1

Configurations C,D/MS1 will be future and not included with current construction phase.

DSA-POLESCHE_C

POLE DATA TABLE										
POLE TYPE	PIECE MARK	MAX NUMBER OF X-Arms	POLE SECTION	TOP O.D. (INCHES)	BTM. O.D. (INCHES)	OVERALL LENGTH	STRAIGHT LENGTH	TAPER LENGTH	THICKNESS (INCHES)	TOP OF STEEL NOMINAL	ASTM REFERENCE
LSS100C	MP-5BTTDSA-5	3	FIXTURE MOUNTING	11.183"	15.965"	34'-1 7/8"	-----	34'-1 7/8"	.179	99'-7 1/2"	A595A (Fy=55 ksi) or A572, Gr 55 or 65
	MP-7BTDSA-D		#2	14.954"	20.770"	41'-6 1/2"	-----	41'-6 1/2"	.239	-----	A595A (Fy=55 ksi) or A572, Gr 55 or 65
	MP-8BTDSA-D		#1	19.492"	24.047"	32'-6 3/8"	-----	32'-6 3/8"	.313	-----	A595A (Fy=55 ksi) or A572, Gr 55 or 65
	MP-7BDSA		PRECAST BASE	FOR PRECAST MEMBER PROPERTIES SEE PRECAST BASE DETAIL A/-						

DSA-100CBT_J

DSA-BRK_A

Plot Stamp:
6/22/2026 9:21:06 AM

Parlier High School Football
FIELD LIGHTING
Parlier, CA

ENGINEER ★ MECHANICAL ★ REGISTERED PROFESSIONAL ★ STATE OF CALIFORNIA
No. 4506
Exp. 6-30-27

CONSULTANT
rtm
engineering consultants
1 Ada, Suite 100, Irvine, CA 92618
949.753.8181
www.rtmec.com
RTM JOB NO.: 463.869

musco Lighting
CORPORATE OFFICE:
P.O. Box 808
211 2nd Avenue West
Oskaloosa, Iowa 52577
800/825-6020

DRAWING TITLE:
POLE DETAIL
SCALE: SEE PLAN
REVISIONS
REFERENCE:

PROJECT NO:
215070

DATE:
01/30/2026

DRAWN BY:
W.Isiminger

DRAWING NO:
2 OF 5
MS1

PBK
www.pbk.com
559-448-8400
FRESNO, CA

PARLIER HS STADIUM REPLACEMENT
603 3rd Street
Parlier, CA 93648

CLIENT PROJECT NO: 250093
DSA SUBMISSION
DSA APPL. NO.: 02-124002 DSA FILE NO.: 10-H12

PARLIER UNIFIED SCHOOL DISTRICT

REGISTERED PROFESSIONAL ENGINEER
R.J.HARDIN
No. 9125
ELECTRICAL
STATE OF CALIFORNIA

CLIENT
PARLIER UNIFIED SCHOOL DISTRICT
DATE: YYYY/MM/DD
PROJECT NUMBER: 250093
DRAWING HISTORY

No.	Description	Date
1	REF.#003	05/07/2026
2	ADDENDUM #3	05/08/2026
3	ADDENDUM #4	06/12/2026

CHECKED BY: HDE
DRAWN BY: HDE

POLE DETAIL

MS1

ATTACHMENT DETAILS
MD1
FOR BLUEBEAM LABELING/OCR:

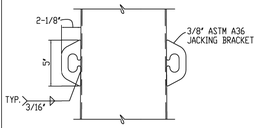

A JACKING BRACKET DETAIL
N.T.S. DSA-3RDSHEET_T

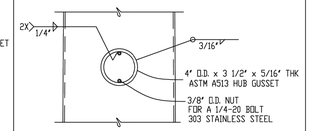

B HUB DETAIL
N.T.S. DSA-3RDSHEET_T

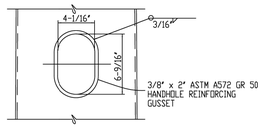

C HANDHOLE SLEEVE DETAIL
N.T.S. DSA-3RDSHEET_T

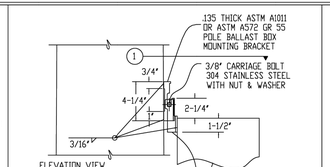

D MOUNTING BRACKET DETAIL
N.T.S. DSA-3RDSHEET_T

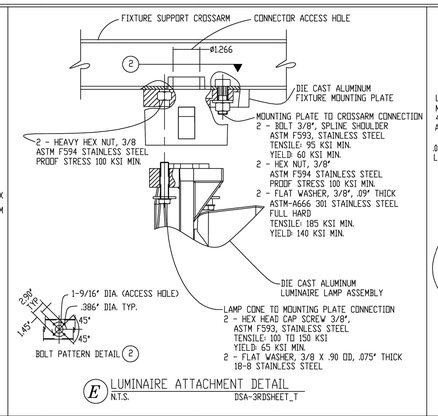

E LUMINAIRE ATTACHMENT DETAIL
N.T.S. DSA-3RDSHEET_T

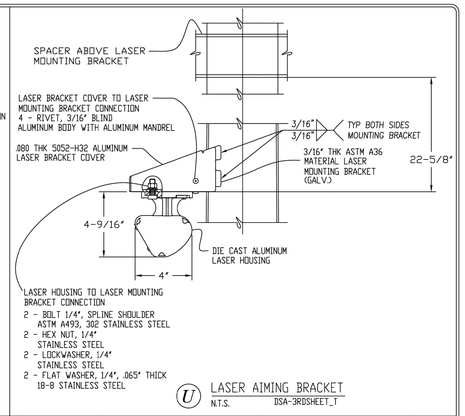

U LASER AIMING BRACKET
N.T.S. DSA-3RDSHEET_T

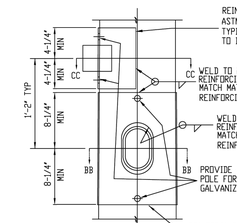

H HANDHOLE/HUB REINFORCING GUSSET
N.T.S.

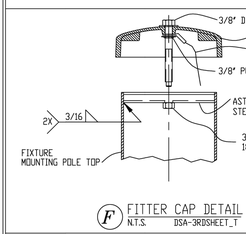

F FITTER CAP DETAIL
N.T.S. DSA-3RDSHEET_T

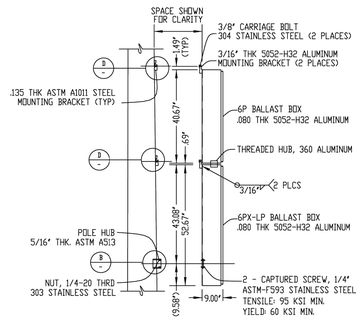

6P/6PX-LP
SL BALLAST BOX CONNECTION DETAIL
N.T.S. STRU-6P6PXLP_E

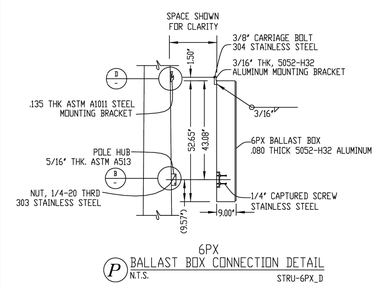

6PX
P BALLAST BOX CONNECTION DETAIL
N.T.S. STRU-6PX_D

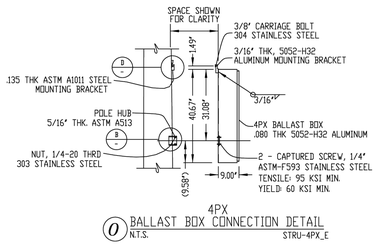

4PX
O BALLAST BOX CONNECTION DETAIL
N.T.S. STRU-4PX_E

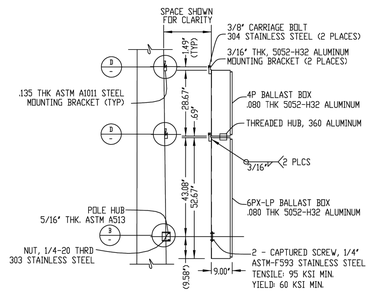

4P/6PX-LP
RL BALLAST BOX CONNECTION DETAIL
N.T.S. STRU-4P6PXLP_E

Information contained herein is the confidential property of Musco Sports Lighting, LLC and/or its parent companies, affiliates, successors and assigns. Reproduction, distribution, or use of the information other than its limited, intended purpose without express written permission is prohibited. Musco products referenced or shown are protected by one or more of the following patents. U.S. Patents: 4947303; 4994718; 5075828; 5134557; 5161883; 5211473; 5229681; 5377611; 5398478; 5423281; 5426577; 5600537; 5794387; 5856721; 6036338; 6203176; 6250596; 6340790; 6398392; 6681110; 6833675; 6929385; 6969034; 6986697; 7059572; D337168; D353797; D353911; D411096. Other patents pending.

STRU-MD1

Parlier High School Football
FIELD LIGHTING
Parlier, CA

CONSULTANT
rtm
engineering consultants
1 Ada, Suite 100, Irvine, CA 92618
949.727.1820
WWW.RTMEC.COM
RTM JOB NO.: 463.869

CORPORATE OFFICE:
P.O. Box 808
211 2nd Avenue West
Oskaloosa, Iowa 52577
800/825-6020

DRAWING TITLE: ATTACHMENT DETAILS
SCALE: SEE PLAN
REVISIONS:
REFERENCE:

PROJECT NO. 215070

DATE: 02/05/2026

DRAWN BY: W.Isiminger

DRAWING NO. 3 OF 5 MD1

PBK
www.pbk.com
559-448-8400
FRESNO, CA

PARLIER HS STADIUM REPLACEMENT

CLIENT PROJECT NO: 250093
DSA SUBMISSION
DSA APPL. NO.: 02-124002 DSA FILE NO.: 10-H12

PARLIER UNIFIED SCHOOL DISTRICT

CLIENT
PARLIER UNIFIED SCHOOL DISTRICT
DATE: YYYY/MM/DD
PROJECT NUMBER: 250093
DRAWING HISTORY

No.	Description	Date
1	RFI #003	05/03/2026
2	ADDENDUM #3	05/08/2026
3	ADDENDUM #4	05/12/2026

CHECKED BY: HDE
DRAWN BY: HDE

ATTACHMENT DETAILS

MD1

Plot Stamp:
6/22/2026 9:21:06 AM

ATTACHMENT DETAILS
MD2
FOR BLUEBEAM LABELING/OCR:

0"
1"

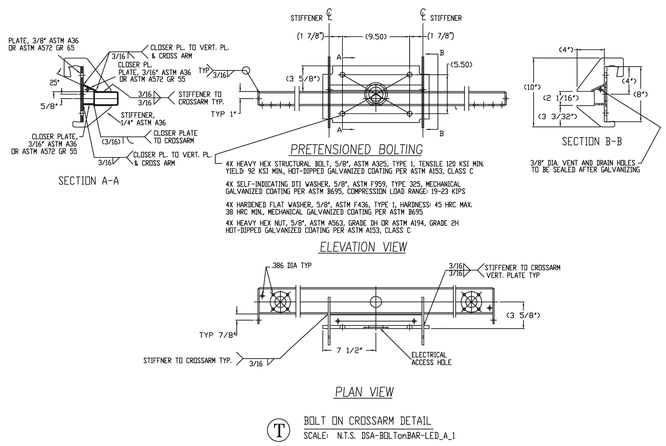

T BOLT ON CROSSARM DETAIL
SCALE: N.T.S. DSA-BOLTonBAR-LED_A_1

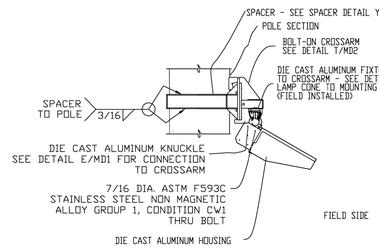

Z LIGHT FIXTURE (TYPICAL)
SCALE: N.T.S.
DSA-1500-BOLTON_A

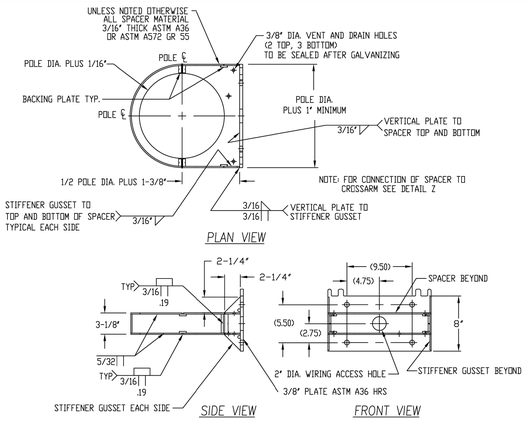

Y SPACER DETAIL
SCALE: N.T.S. DSA-BOLTON_L

W SPACER DETAIL
SCALE: N.T.S.
DSA-BOLTonBACKtoBACK-LED_A

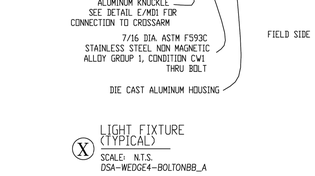

X LIGHT FIXTURE (TYPICAL)
SCALE: N.T.S.
DSA-WEDGE4-BOLTONBB_A

Information contained herein is the confidential property of Musco Sports Lighting, LLC and/or its parent companies, affiliates, successors and assigns. Reproduction, distribution, or use of the information other than its limited, intended purpose without express written permission is prohibited. Musco products referenced or shown are protected by one or more of the following patents. U.S. Patents: 4947303; 4994718; 5075828; 5134557; 5161883; 5211473; 5229681; 5377611; 5398478; 5423281; 5426577; 5600537; 5794387; 5856721; 6036338; 6203176; 6250596; 6340790; 6398392; 6681110; 6833675; 6929385; 6969034; 6988697; 7059572; D337168; D353797; D353911; D411096. Other patents pending.

STRD-MD2

Parlier High School Football
FIELD LIGHTING
Parlier, CA

REGISTERED PROFESSIONAL ENGINEER
No. 4506
Exp. 6-30-27
STRUCTURAL
STATE OF CALIFORNIA

CONSULTANT
rtm
engineering consultants
1 Ada, Suite 100, Irvine, CA 92618
tel (949) 420-3030
WWW.RTMEC.COM
RTM JOB NO.: 463.899

CORPORATE OFFICE:
P.O. Box 808
211 2nd Avenue West
Oskaloosa, Iowa 52577
800/825-6020

DRAWING TITLE: ATTACHMENT DETAILS
SCALE: SEE PLAN
REVISIONS
REFERENCES

PROJECT NO: 215070
DATE: 02/05/2026
DRAWN BY: W.Isiminger
DRAWING NO: MD2
4 OF 5

PARLIER HS STADIUM REPLACEMENT

603 3rd Street
Parlier CA 93648

CLIENT PROJECT NO: 250093
DSA SUBMISSION
DSA APPL. NO.: 02-124002 DSA FILE NO.: 10-H12

PBK
www.pbk.com
559-448-8400
FRESNO, CA

PARLIER UNIFIED SCHOOL DISTRICT

REGISTERED PROFESSIONAL ENGINEER
R.J. HARDIN
No. 9125
ELECTRICAL
STATE OF CALIFORNIA

CLIENT	
PARLIER UNIFIED SCHOOL DISTRICT	
DATE YYYY/MM/DD	PROJECT NUMBER 250093

DRAWING HISTORY

No.	Description	Date
3	RFI #003	05/07/2026
2	ADDENDUM #3	05/08/2026
1	ADDENDUM #4	06/12/2026

CHECKED BY: HDE
DRAWN BY: HDE

ATTACHMENT DETAILS

MD2

Plot Stamp:
6/22/2026 9:21:06 AM

ATTACHMENT DETAILS
MD3
FOR BLUEBEAM LABELING/OCR:

0"
1"

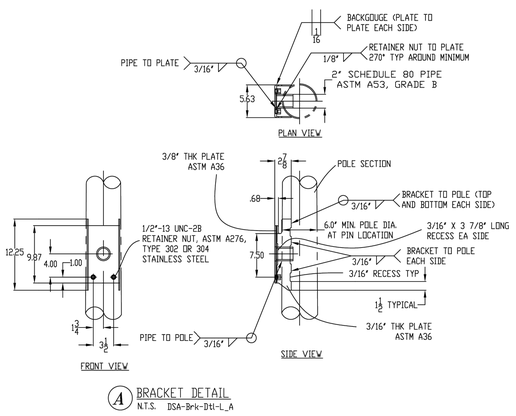

A BRACKET DETAIL
N.T.S. DSA-Brkt-Dtl-L_A

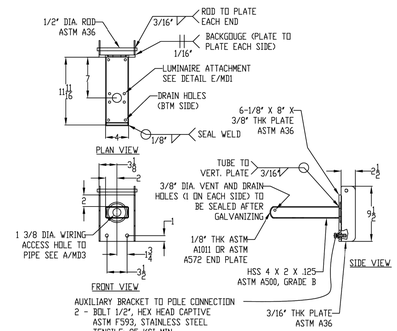

B 1P AUXILIARY MOUNTING BRACKET
N.T.S. DSA-1P FIXTURE MOUNT_F

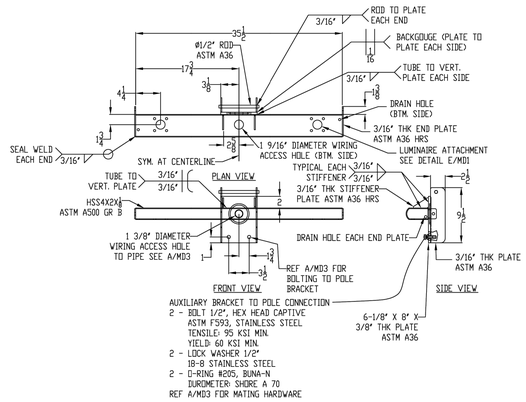

C 2P AUXILIARY MOUNTING BRACKET
N.T.S. DSA-2P FIXTURE MOUNT_F

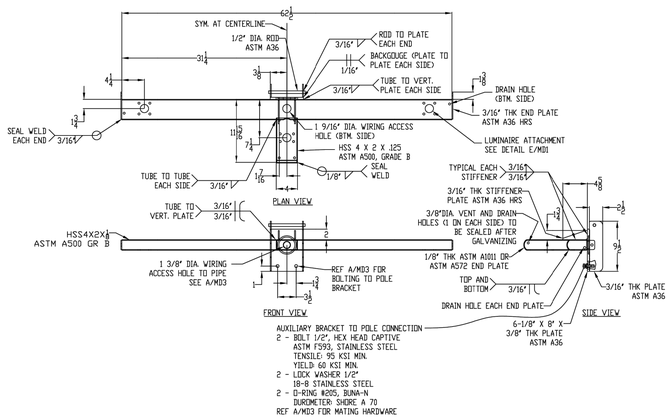

D 3P AUXILIARY MOUNTING BRACKET
N.T.S. DSA-3P FIXTURE MOUNT_G

Information contained herein is the confidential property of Musco Sports Lighting, LLC and/or its parent companies, affiliates, successors and assigns. Reproduction, distribution, or use of the information other than its limited, intended purpose without express written permission is prohibited. Musco products referenced or shown are protected by one or more of the following patents. U.S. Patents: 4947303; 4994718; 5075828; 5134557; 5161883; 5211473; 5229681; 5377611; 5398478; 5423281; 5426577; 5600537; 5794387; 5856721; 6036338; 6203176; 6250596; 6340790; 6398392; 6681110; 6833675; 6929385; 6969034; 6988697; 7059572; D337168; D353797; D353911; D411096. Other patents pending.

Parlier High School Football
FIELD LIGHTING
Parlier, CA

CONSULTANT
rtm engineering consultants
1 Ada, Suite 100, Irvine, CA 92618
949.727.9336
www.rtmec.com
RTM JOB NO.: 463.869

REGISTERED PROFESSIONAL ENGINEER R. J. HARDIN No. 4506 Exp. 6-30-27 STRUCTURAL STATE OF CALIFORNIA

musco Lighting
CORPORATE OFFICE:
P.O. Box 808
211 2nd Avenue West
Oskaloosa, Iowa 52577
800/825-6020

DRAWING TITLE: ATTACHMENT DETAILS
SCALE: SEE PLAN
REVISIONS
REFERENCE

PROJECT NO. 215070
DATE: 02/05/2026
DRAWN BY: W.Isiminger
DRAWING NO. MD3
5 OF 5

STMD-MD3

PBK
www.pbk.com
559-448-8400
FRESNO, CA

PARLIER HS STADIUM REPLACEMENT
603 3rd Street
Parlier, CA 93648

CLIENT PROJECT NO: 250093
DSA SUBMISSION
DSA APPL. NO.: 02-124002 DSA FILE NO.: 10-H12

PARLIER UNIFIED SCHOOL DISTRICT

REGISTERED PROFESSIONAL ENGINEER R. J. HARDIN No. 9125 ELECTRICAL STATE OF CALIFORNIA

CLIENT	
PARLIER UNIFIED SCHOOL DISTRICT	
DATE YYYY/MMDD	PROJECT NUMBER 250093

DRAWING HISTORY

No.	Description	Date
1	RFI #003	06/03/2026
2	ADDENDUM #3	06/08/2026
3	ADDENDUM #4	06/12/2026

CHECKED BY: HDE
DRAWN BY: HDE

ATTACHMENT DETAILS

MD3

Plot Stamp:
6/22/2026 9:21:06 AM

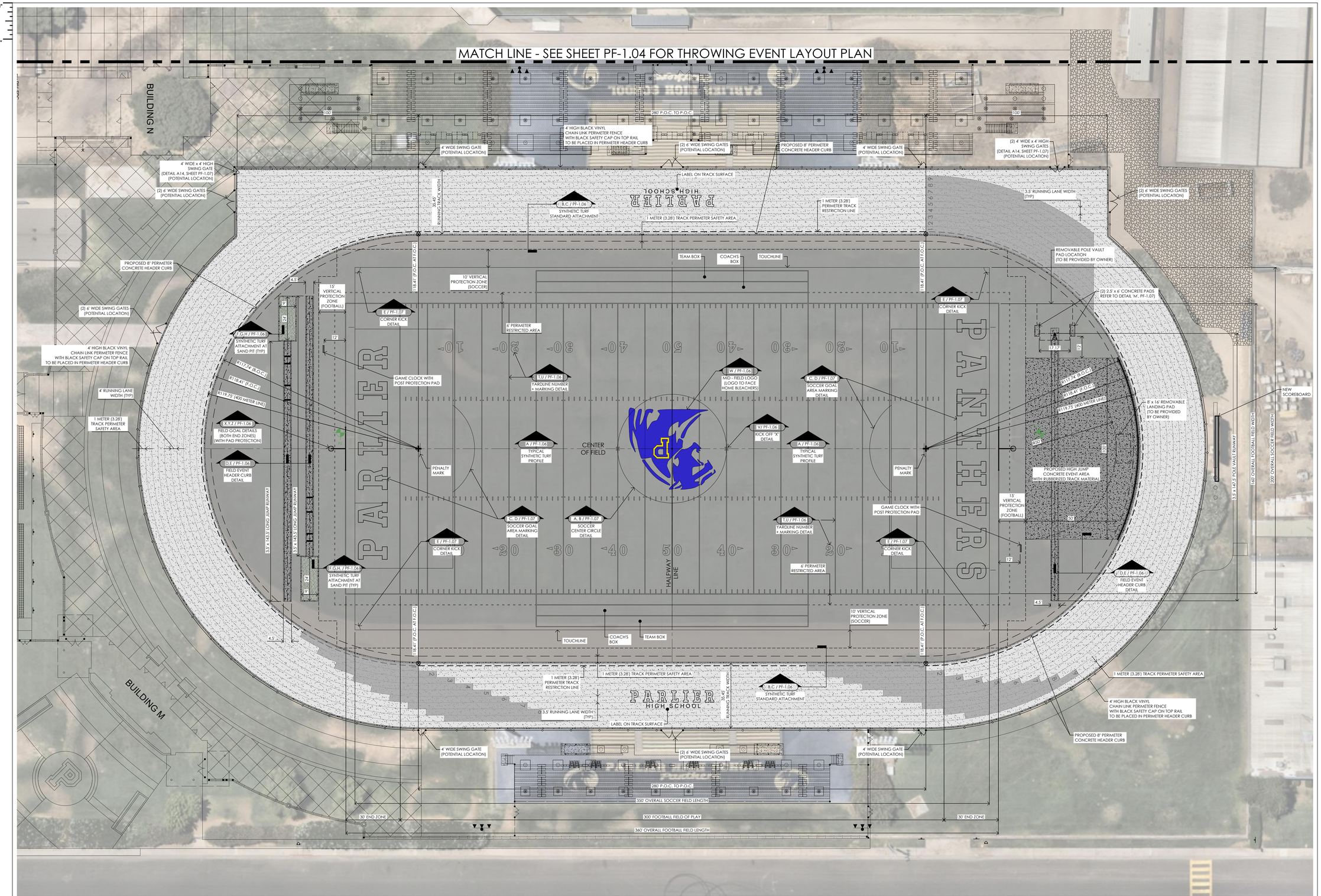

GENERAL NOTES:

1. ALL UNDERGROUND UTILITIES SHOWN ARE BASED ON THE BEST AVAILABLE INFORMATION. THE CONTRACTOR SHALL COORDINATE AND PROVIDE UTILITY LOCATES SERVICES WITHIN THE AREA OF CONSTRUCTION ACTIVITY.
2. THE CONTRACTOR SHALL REMOVE ALL EXCESSIVE SOIL AND EXISTING MATERIALS OFF-SITE IN A LEGAL MANNER AT NO ADDITIONAL COST TO THE SCHOOL BOARD. THE CONTRACTOR IS FULLY RESPONSIBLE FOR ALL QUANTITIES OF MATERIALS AND CUT/FILL CALCULATIONS.
3. THE CONTRACTOR IS FULLY RESPONSIBLE FOR FIELD VERIFYING ALL EXISTING CONDITIONS PRIOR TO ANY CONSTRUCTION ACTIVITY. ANY FIELD DEVIATIONS FOUND SHALL BE BROUGHT TO THE E.O.R. ATTENTION.
4. THE CONTRACTOR IS FULLY RESPONSIBLE FOR ALL LAND SURVEYING LAYOUTS AND AS-BUILT SURVEYING IN ACCORDANCE WITH THE PROJECT SPECIFICATIONS OR PERMIT CONDITIONS.
5. THE CONTRACTOR IS RESPONSIBLE FOR ALL SITE AND CONSTRUCTION SAFETY MEASURES IN ACCORDANCE WITH THE MOST CURRENT O.S.H.A. STANDARDS.
6. THE CONTRACTOR SHALL SUBMIT ALL MATERIALS FOR SHOP DRAWING REVIEW AND APPROVAL PRIOR TO ORDERING OR INSTALLING ANY MATERIALS.
7. THE CONTRACTOR SHALL OBTAIN THE N.P.D.E.S PERMIT PRIOR TO ANY ON-SITE CONSTRUCTION ACTIVITY.
8. THE PLAYING FIELD CONTRACTOR SHALL BE REQUIRED TO PROVIDE ALL THE FENCING STRUCTURAL ENGINEERING FOUNDATIONS, POST SIZES, FABRIC, AND ALL THE NECESSARY HARDWARE.
10. EXISTING FIELD GOALS TO BE REMOVED AND REPLACED BASED ON NEW LOCATIONS. SEE SHEET PF-1.06 FOR ADDITIONAL INFORMATION.
11. ALL IRRIGATION SYSTEM COMPONENTS TO BE REMOVED FROM UNDER THE PLAYING FIELD.
12. CONTRACTOR SHALL REMOVE EXISTING NATURAL TURF, AND INSIDE CONCRETE CURB.
13. CONTRACTOR TO REVIEW GEOTECH REPORT IN REGARDS TO THE REQUIRED SUBGRADE COMPACTION AND ASPHALT SECTION.
14. CONTRACTOR IS RESPONSIBLE FOR FURNISHING AND INSTALLING ALL NECESSARY TAKE OFF BOARDS FOR MEN'S & WOMEN'S LONG / TRIPLE JUMP EVENTS, IN ACCORDANCE WITH NFHS.

FIELD PROGRAM:

1. FOOTBALL FIELD 160' x 360'
2. SOCCER FIELD: 200' x 350'
3. PROPOSED HIGH JUMP AREA 50' X 100' SLAB
4. (2) PROPOSED LONG JUMP / TRIPLE JUMP RUNWAYS 143'-6" x 3'-6" (MIN)
5. PROPOSED POLE VAULT RUNWAY 147'-6" x 3'- 6" (MIN)

* PER NFHS, THE RECOMMENDED LENGTH OF RUNWAY IS A MINIMUM OF 130 FEET (40 METERS). WHERE CONDITIONS PERMIT, IT SHOULD BE 147 FEET, 6 INCHES (45 METERS)

FIELD MARKING COLORS **:

1. FOOTBALL FIELD (PRIMARY): WHITE
2. SOCCER FIELD (SECONDARY): YELLOW

** MARKINGS PER NFHS. FINAL COLORS TO BE APPROVED BY OWNER DURING SYNTHETIC TURF MANUFACTURER SHOP DRAWING REVIEW.

LEGEND:

DENOTES LIMITS OF SYNTHETIC TURF COVERAGE: (101,530 ± S.F. / 2.33 ± AC)

DENOTES PROPOSED 400 METER ASPHALT RUNNING TRACK (52,505 ± S.F. / 1.21 ± AC)

DENOTES PROPOSED CONCRETE SLABS FOR FIELD EVENT RUNWAYS (CONCRETE CURBS NOT INCLUDED) (7,425 S.F. / 0.17 AC)

X / XX-X.00 — DETAIL LETTER / DETAIL SHEET
XXXXX — DETAIL DESCRIPTION

EXISTING PERCOLATION TEST LOCATION

SCALE: 1" = 20'
0 10 20 40
N036° 37' 03.19" - W119° 31' 34.53"
CENTER OF FIELD

PBK
www.pbk.com
TX FIRM: BR 1608
HOUSTON, TX
T: 713-960-9696

PARLIER HIGH SCHOOL STADIUM REPLACEMENT

603 3rd STREET
PARLIER, CA 93648

DSA SUBMISSION - CONSTRUCTION DOCUMENTS

LICENSED ARCHITECT
MICHAEL R. SCHOEN
No. 32339
RENEWAL DATE
FEB 28, 2027
STATE OF CALIFORNIA

CLIENT	
PARLIER UNIFIED SCHOOL DISTRICT	
DATE: 05/22/2026	PROJECT NUMBER: 250093

DRAWING HISTORY

No.	Description	Date
1	ADDENDUM #01	2026-05-22

CHECKED BY: WJM
DRAWN BY: AAS

PLAYING FIELD LAYOUT & MATERIAL PLAN

PF-1.00

Plot Stamp:
6/12/2026 12:20:33 PM

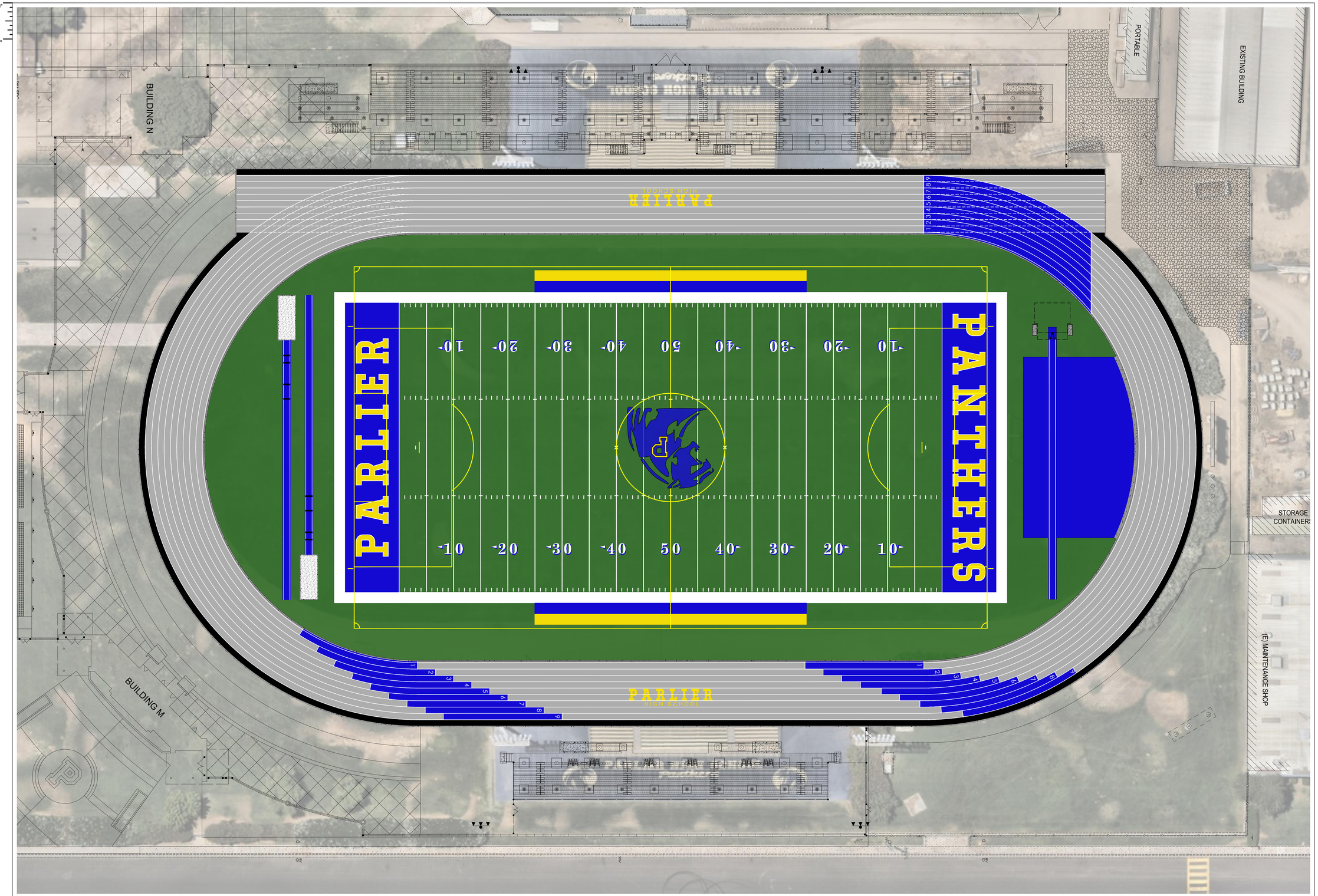

FIELD PROGRAM:

1. FOOTBALL FIELD 160' x 360'
2. SOCCER FIELD: 200' x 350'
3. PROPOSED HIGH JUMP AREA 50' X 100' SLAB
4. (2) PROPOSED LONG JUMP / TRIPLE JUMP RUNWAYS 143'-6" x 3'-6" (MIN)
5. PROPOSED POLE VAULT RUNWAY 147'-6" x 3'- 6" (MIN)

* PER NFHS, THE RECOMMENDED LENGTH OF RUNWAY IS A MINIMUM OF 130 FEET (40 METERS). WHERE CONDITIONS PERMIT, IT SHOULD BE 147 FEET, 6 INCHES (45 METERS)

FIELD MARKING COLORS **:

1. FOOTBALL FIELD (PRIMARY): WHITE
2. SOCCER FIELD (SECONDARY): YELLOW

** MARKINGS PER NFHS. FINAL COLORS TO BE APPROVED BY OWNER DURING SYNTHETIC TURF MANUFACTURER SHOP DRAWING REVIEW.

SCALE: 1" = 20'

0 10 20 40

N036° 37' 03.19" - W119° 31' 34.53"
CENTER OF FIELD

PBK

HOUSTON, TX
713-965-0608

TX FIRM: BR 1608

www.pbk.com

PARLIER HIGH SCHOOL STADIUM REPLACEMENT

603 3rd STREET
PARLIER, CA 93648

DSA SUBMISSION - CONSTRUCTION DOCUMENTS

LICENSED ARCHITECT
MICHAEL R. SCHOEN
No. C-35465
RENEWAL DATE
FEB 28, 2027
STATE OF CALIFORNIA

CLIENT
PARLIER UNIFIED SCHOOL DISTRICT

DATE	PROJECT NUMBER
05/22/2026	250093

DRAWING HISTORY

No.	Description	Date
1	ADDENDUM #01	2026-05-22

CHECKED BY: WJM
DRAWN BY: AAS

PLAYING FIELD COLOR MARIKING PLAN

PF-1.01

Plot Stamp:
6/12/2026 12:20:43 PM

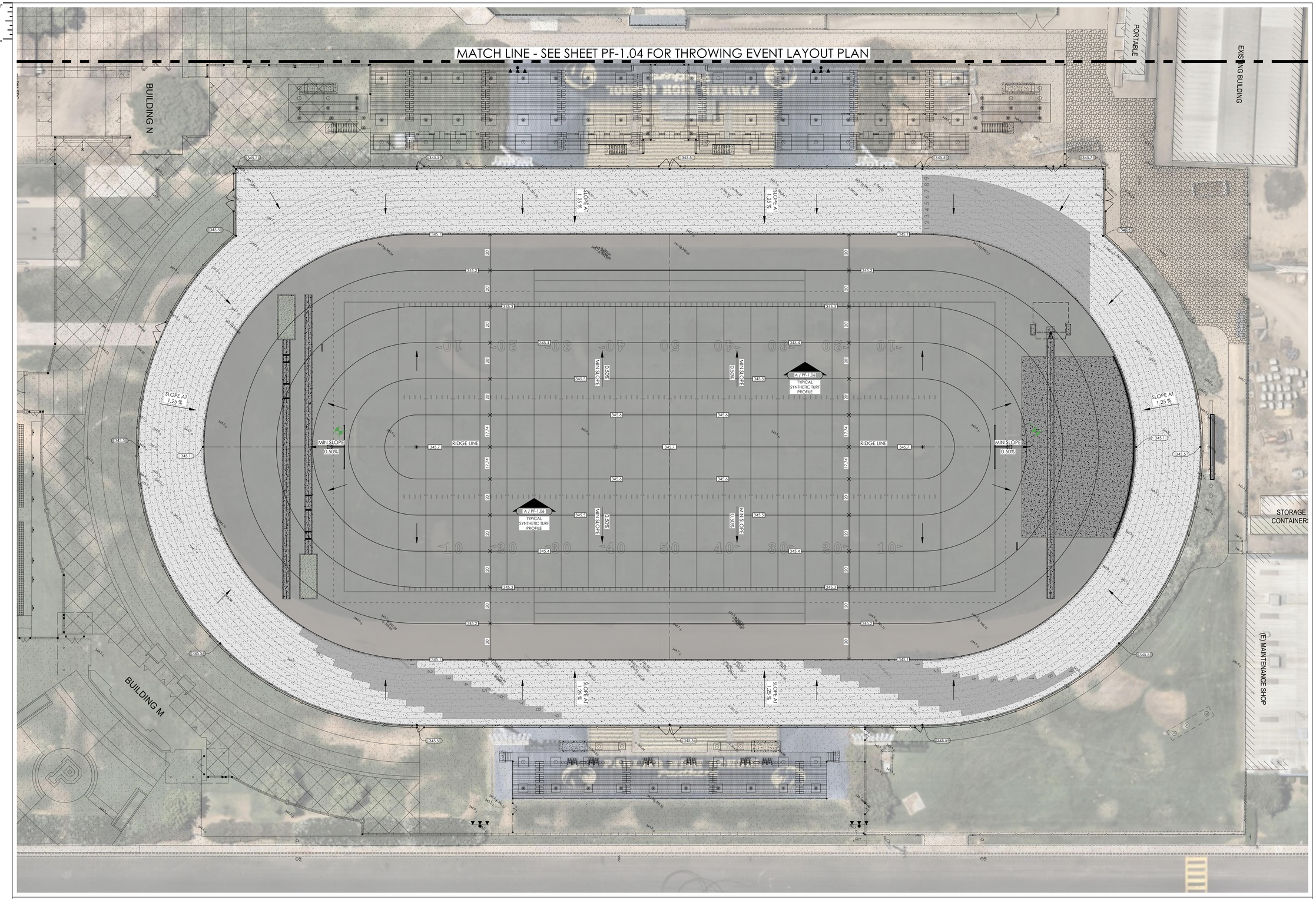

GENERAL NOTES:

1. ALL UNDERGROUND UTILITIES SHOWN ARE BASED ON THE BEST AVAILABLE INFORMATION. THE CONTRACTOR SHALL COORDINATE AND PROVIDE UTILITY LOCATES SERVICES WITHIN THE AREA OF CONSTRUCTION ACTIVITY.

2. THE CONTRACTOR SHALL REMOVE ALL EXCESSIVE SOIL AND EXISTING MATERIALS OFF-SITE IN A LEGAL MANNER AT NO ADDITIONAL COST TO THE SCHOOL BOARD. THE CONTRACTOR IS FULLY RESPONSIBLE FOR ALL QUANTITIES OF MATERIALS AND CUT/FILL CALCULATIONS.

3. THE CONTRACTOR IS FULLY RESPONSIBLE FOR FIELD VERIFYING ALL EXISTING CONDITIONS PRIOR TO ANY CONSTRUCTION ACTIVITY. ANY FIELD DEVIATIONS FOUND SHALL BE BROUGHT TO THE E.O.R. ATTENTION.

4. THE CONTRACTOR IS FULLY RESPONSIBLE FOR ALL LAND SURVEYING LAYOUTS AND AS-BUILT SURVEYING IN ACCORDANCE WITH THE PROJECT SPECIFICATIONS AND AHJ REQUIREMENTS.

5. THE CONTRACTOR IS RESPONSIBLE FOR ALL SITE AND CONSTRUCTION SAFETY MEASURES IN ACCORDANCE WITH THE MOST CURRENT O.S.H.A. STANDARDS.

6. THE CONTRACTOR SHALL SUBMIT ALL MATERIALS FOR SHOP DRAWING REVIEW AND APPROVAL PRIOR TO ORDERING OR INSTALLING ANY MATERIALS.

7. THE CONTRACTOR SHALL OBTAIN THE N.P.D.E.S PERMIT PRIOR TO ANY ON-SITE CONSTRUCTION ACTIVITY.

8. THE PLAYING FIELD CONTRACTOR SHALL BE REQUIRED TO PROVIDE ALL THE FENCING STRUCTURAL ENGINEERING FOUNDATIONS, POST SIZES, FABRIC, AND ALL THE NECESSARY HARDWARE.

9. ALL EXISTING STORMWATER INLETS AND PIPING TO BE REMOVED FROM UNDER THE PLAYING FIELD AREA. ALL NON-DISCHARGE PIPES UNDER THE EXISTING RUNNING TRACK MAY BE ABANDONED BY THE USE OF FLOWABLE CONCRETE FILL OR EQUAL.

10. THE FINAL SURFACE DESIGN IS BASED ON 0.50% SLOPE. THE SUBSURFACE COLLECTION SYSTEM HAS BEEN DESIGN AT 0.50% BASED ON THE DISCHARGE PIPE SIZE AND INVERTS.

11. THE SITE CIVIL ENGINEER RESPONSIBLE FOR WORK OUTSIDE OF THE PLAYING FIELD AND TRACK LIMITS SHALL PROVIDE GRADING TRANSITION TO MATCH THE PROPOSED TRACK TOP OF CURB.

12. CONTRACTOR TO REVIEW GEOTECH REPORT IN REGARDS TO THE REQUIRED SUBGRADE COMPACTION AND ASPHALT SECTION.

LEGEND:

DENOTES LIMITS OF SYNTHETIC TURF COVERAGE: (101.530 ± S.F. / 2.33 ± AC)

DENOTES PROPOSED 400 METER ASPHALT RUNNING TRACK (52.505 ± S.F. / 1.21 ± AC)

DENOTES PROPOSED CONCRETE SLABS FOR FIELD EVENT RUNWAYS (CONCRETE CURBS NOT INCLUDED) (7.425 S.F. / 0.17 AC)

DETAIL LETTER
X / XX-X.00 — DETAIL SHEET
XXXXX — DETAIL DESCRIPTION

X.00.00 — EXISTING SPOT GRADE ELEVATION

XXX.XX — PROPOSED SPOT GRADE ELEVATION

XX.XX — PROPOSED CONTOUR ELEVATION

P — EXISTING PERCOLATION TEST LOCATION

SCALE: 1" = 20'

0 10 20 40

N036° 37' 03.19" - W119° 31' 34.53"
CENTER OF FIELD

PBK

www.pbk.com

TX FIRM: BR 1608

HOUSTON, TX
713-985-0608

PARLIER HIGH SCHOOL STADIUM REPLACEMENT

603 3rd STREET
PARLIER, CA 93648

DSA SUBMISSION - CONSTRUCTION DOCUMENTS

LICENSED ARCHITECT
MICHAEL R. SCHOEN
No. C-35165
RENEWAL DATE
FEB 28, 2027
STATE OF CALIFORNIA

CLIENT	
PARLIER UNIFIED SCHOOL DISTRICT	
DATE 05/22/2026	PROJECT NUMBER 250093

DRAWING HISTORY

No.	Description	Date
1	ADDENDUM #01	2026-05-22

CHECKED BY: WJM

DRAWN BY: AAS

PLAYING FIELD SURFACE GRADING PLAN

PF-1.02

Plot Stamp:
6/12/2026 12:20:54 PM

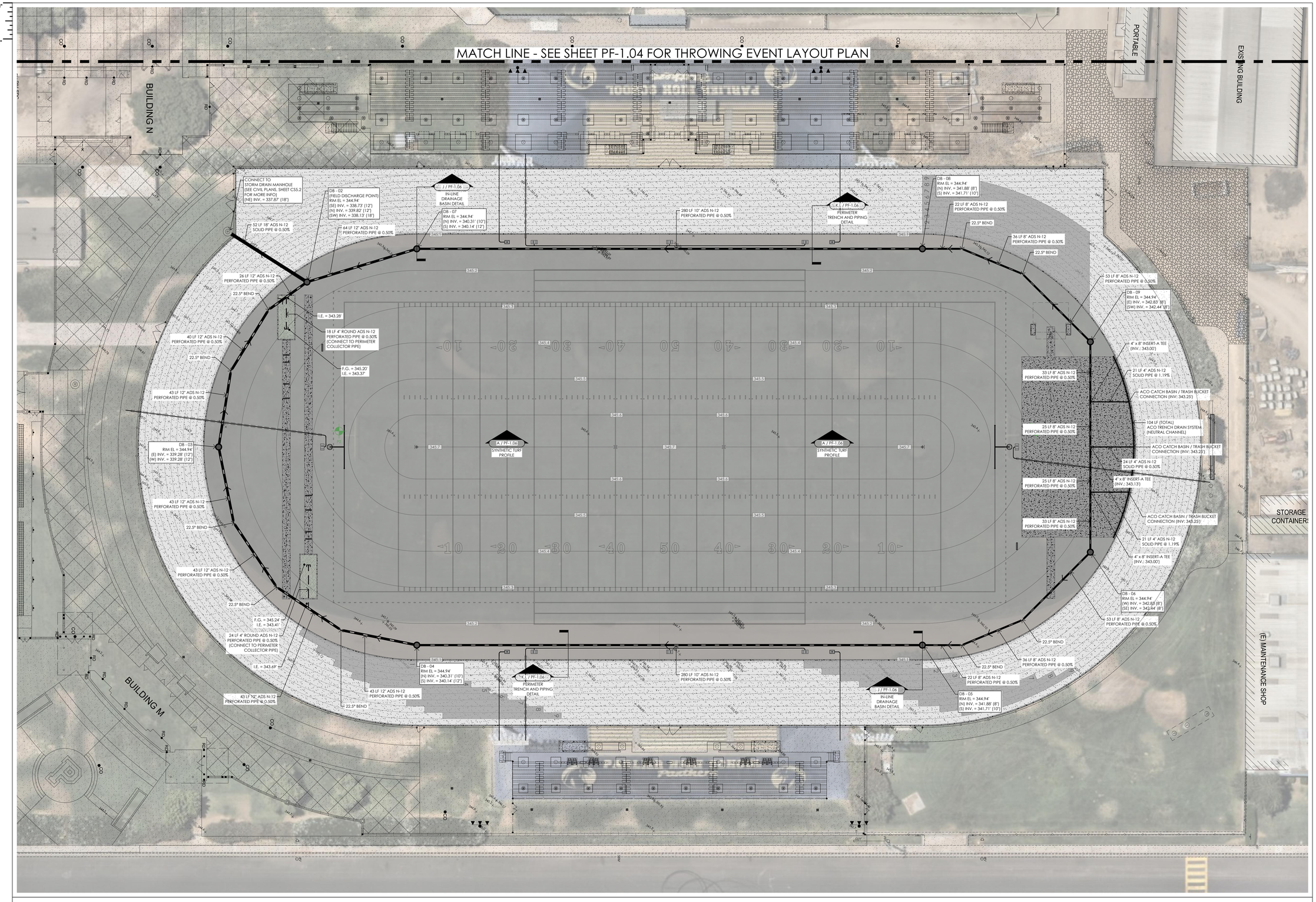

GENERAL NOTES:

1. ALL UNDERGROUND UTILITIES SHOWN ARE BASED ON THE BEST AVAILABLE INFORMATION. THE CONTRACTOR SHALL COORDINATE AND PROVIDE UTILITY LOCATES SERVICES WITHIN THE AREA OF CONSTRUCTION ACTIVITY.

2. THE CONTRACTOR SHALL REMOVE ALL EXCESSIVE SOIL AND EXISTING MATERIALS OFF-SITE IN A LEGAL MANNER AT NO ADDITIONAL COST TO THE SCHOOL BOARD. THE CONTRACTOR IS FULLY RESPONSIBLE FOR ALL QUANTITIES OF MATERIALS AND CUT/FILL CALCULATIONS.

3. THE CONTRACTOR IS FULLY RESPONSIBLE FOR FIELD VERIFYING ALL EXISTING CONDITIONS PRIOR TO ANY CONSTRUCTION ACTIVITY. ANY FIELD DEVIATIONS FOUND SHALL BE BROUGHT TO THE E.O.R. ATTENTION.

4. THE CONTRACTOR SHALL SUBMIT ALL MATERIALS FOR SHOP DRAWING REVIEW AND APPROVAL PRIOR TO ORDERING OR INSTALLING ANY MATERIALS.

5. THE CONTRACTOR SHALL OBTAIN THE N.P.D.E.S PERMIT PRIOR TO ANY ON-SITE CONSTRUCTION ACTIVITY.

6. ALL EXISTING STORMWATER INLETS AND PIPING TO BE REMOVED FROM UNDER THE PLAYING FIELD AREA. ALL NON-DISCHARGE PIPES UNDER THE RUNNING TRACK MAYBE ABANDONED BY THE USE OF FLOWABLE CONCRETE FILL OR EQUAL.

7. THE FINAL SURFACE DESIGN IS BASED ON 0.50% SLOPE. THE SUBSURFACE COLLECTION SYSTEM HAS BEEN DESIGN AT 0.50% BASED ON THE DISCHARGE PIPE SIZE AND INVERTS. THE PLAYING FIELD SLOTTED LATERALS SHALL MATCH THE SURFACE GRADE CROSS SLOPE.

8 . THE CONTRACTOR SHALL TAKE ALL THE NECESSARY PROTECTIVE MEASURES REQUIRED TO NOT DAMAGE THE EXISTING RUNNING TRACK. CONTRACTOR TO PROVIDE BID ALTERNATE FOR TRACK REPLACEMENT.

9. THESE PLANS ARE SCHEMATIC IN NATURE AND ARE SUBJECT TO CHANGE BASED ON OBTAINING THE TOPO SURVEY AND GEOTECHNICAL REPORT.

10. ALL IRRIGATION SYSTEM COMPONENTS TO BE REMOVED FROM UNDER THE PLAYING FIELD AND TRACK.

11. CONTRACTOR TO REVIEW GEOTECH REPORT IN REGARDS TO THE REQUIRED SUBGRADE COMPACTION AND ASPHALT SECTION.

LEGEND:

- DENOTES LIMITS OF SYNTHETIC TURF COVERAGE: (101,530 ± S.F. / 2.33 ± AC)
- DENOTES PROPOSED 400 METER ASPHALT RUNNING TRACK (92,505 ± S.F. / 1.21 ± AC)
- DENOTES PROPOSED CONCRETE SLABS FOR FIELD EVENT RUNWAYS (CONCRETE CURBS NOT INCLUDED) (7,425 S.F. / 0.17 AC)
- DETAIL LETTER
- X / XX-X.00 — DETAIL SHEET
- XXXXX — DETAIL DESCRIPTION
- EXISTING PERCOLATION TEST LOCATION
- X.00.00 — EXISTING SPOT GRADE ELEVATION
- PROPOSED PERIMETER COLLECTOR PIPING (SLOPED AT 0.50%, TYP)
- PROPOSED FLOW DIRECTION
- PROPOSED IN-LINE DRAINAGE BASIN

SCALE: 1" = 20'

0 10 20 40

N33° 37' 03.19" - W119° 31' 34.53"
CENTER OF FIELD

Plot Stamp:
6/12/2026 12:21:04 PM

PBK

www.pbk.com
TX FIRM: BR 1608
HOUSTON, TX
T: 713-960-9000

PARLIER HIGH SCHOOL STADIUM REPLACEMENT

603 3rd STREET
PARLIER, CA 93648

DSA SUBMISSION - CONSTRUCTION DOCUMENTS

LICENSED ARCHITECT
MICHAEL R. SCHOEN
No. C30195
RENEWAL DATE
FEB 28, 2027
STATE OF CALIFORNIA

CLIENT
PARLIER UNIFIED SCHOOL DISTRICT

DATE	PROJECT NUMBER
05/22/2026	250093

DRAWING HISTORY

No.	Description	Date
1	ADDENDUM #01	2026-05-22

CHECKED BY: WJM
DRAWN BY: AAS

PLAYING FIELD SUBSURFACE COLLECTION PLAN

PF-1.03

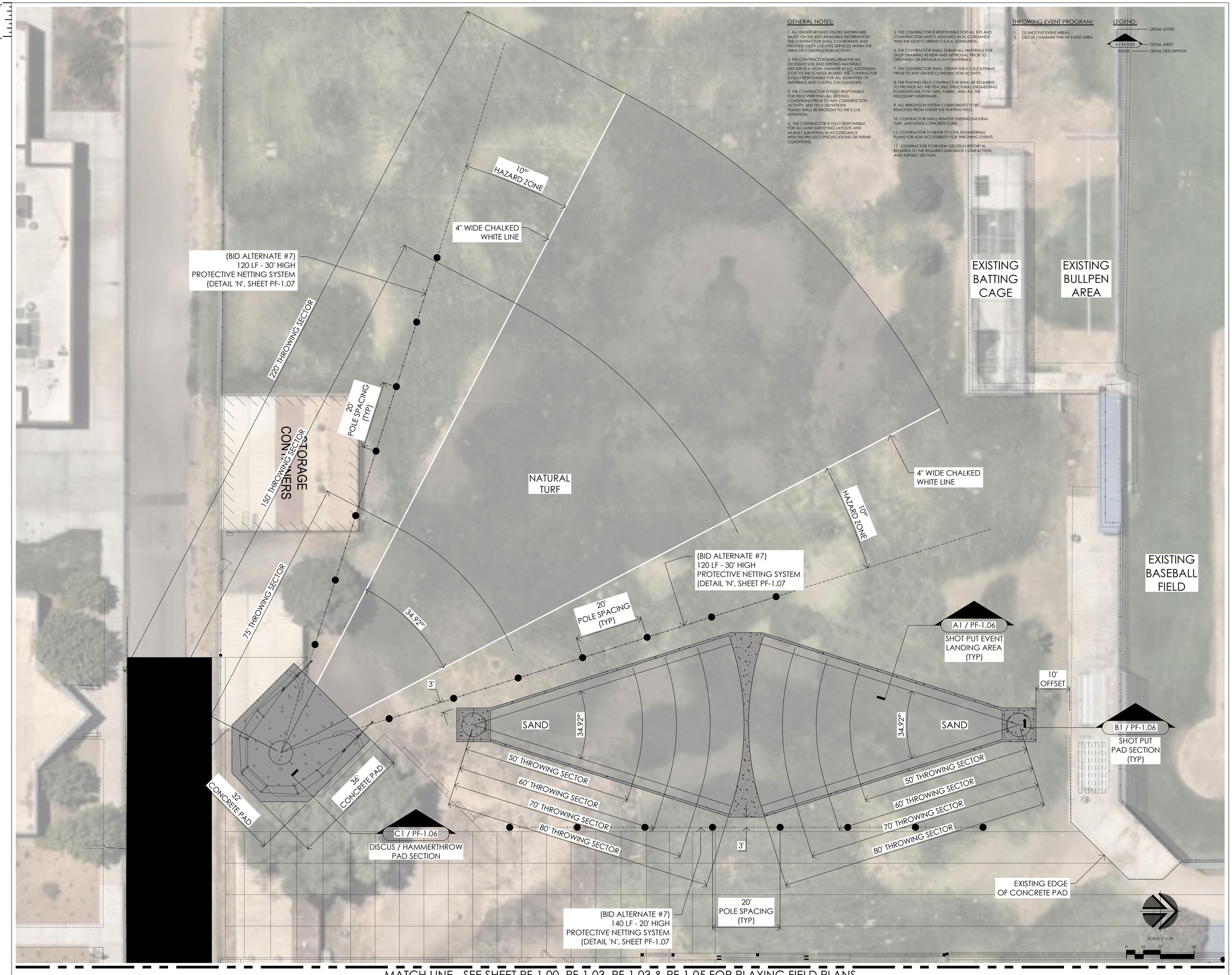

MATCH LINE - SEE SHEET PF-1.00, PF-1.03, PF-1.03 & PF-1.05 FOR PLAYING FIELD PLANS

GENERAL NOTES:

1. ALL UNDERGROUND UTILITIES SHOWN ARE BASED ON THE BEST AVAILABLE INFORMATION. THE CONTRACTOR SHALL COORDINATE AND PROVIDE UTILITY LOCATES SERVICES WITHIN THE AREA OF CONSTRUCTION ACTIVITY.

2. THE CONTRACTOR SHALL REMOVE ALL EXCESSIVE SOIL AND EXISTING MATERIALS OFF-SITE IN A LEGAL MANNER AT NO ADDITIONAL COST TO THE SCHOOL BOARD. THE CONTRACTOR IS FULLY RESPONSIBLE FOR ALL QUANTITIES OF MATERIALS AND CUT/FILL CALCULATIONS.

3. THE CONTRACTOR IS FULLY RESPONSIBLE FOR FIELD VERIFYING ALL EXISTING CONDITIONS PRIOR TO ANY CONSTRUCTION ACTIVITY. ANY FIELD DEVIATIONS FOUND SHALL BE BROUGHT TO THE E.O.R. ATTENTION.

4. THE CONTRACTOR IS FULLY RESPONSIBLE FOR ALL LAND SURVEYING LAYOUTS AND AS-BUILT SURVEYING IN ACCORDANCE WITH THE PROJECT SPECIFICATIONS OR PERMIT CONDITIONS.

5. THE CONTRACTOR IS RESPONSIBLE FOR ALL SITE AND CONSTRUCTION SAFETY MEASURES IN ACCORDANCE WITH THE MOST CURRENT O.S.H.A. STANDARDS.

6. THE CONTRACTOR SHALL SUBMIT ALL MATERIALS FOR SHOP DRAWING REVIEW AND APPROVAL PRIOR TO ORDERING OR INSTALLING ANY MATERIALS.

7. THE CONTRACTOR SHALL OBTAIN THE N.P.D.E.S PERMIT PRIOR TO ANY ON-SITE CONSTRUCTION ACTIVITY.

8. THE PLAYING FIELD CONTRACTOR SHALL BE REQUIRED TO PROVIDE ALL THE FENCING STRUCTURAL ENGINEERING FOUNDATIONS, POST SIZES, FABRIC, AND ALL THE NECESSARY HARDWARE.

9. ALL IRRIGATION SYSTEM COMPONENTS TO BE REMOVED FROM UNDER THE PLAYING FIELD.

10. CONTRACTOR SHALL REMOVE EXISTING NATURAL TURF, AND INSIDE CONCRETE CURB.

11. CONTRACTOR TO REFER TO CIVIL ENGINEERING PLANS FOR ADA ACCESSIBILITY FOR THROWING EVENTS.

12. CONTRACTOR TO REVIEW GEOTECH REPORT IN REGARDS TO THE REQUIRED SUBGRADE COMPACTION AND ASPHALT SECTION.

THROWING EVENT PROGRAM:

1. (2) SHOT PUT EVENT AREAS
2. DISCUS / HAMMER THROW EVENT AREA

LEGEND:

DETAIL LETTER
X / XX-X.D0 — DETAIL SHEET
XXXXX — DETAIL DESCRIPTION

PBK

HOUSTON, TX
713-985-0608

TX FIRM: BR 1608

www.pbk.com

PARLIER HIGH SCHOOL STADIUM REPLACEMENT

603 3rd STREET
PARLIER, CA 93648

DSA SUBMISSION - CONSTRUCTION DOCUMENTS

LICENSED ARCHITECT
MICHAEL R. SCHOEN
No. C-35165
RENEWAL DATE
FEB 28, 2027
STATE OF CALIFORNIA

CLIENT
PARLIER UNIFIED SCHOOL DISTRICT

DATE	PROJECT NUMBER
05/22/2026	250093

DRAWING HISTORY

No.	Description	Date
1	ADDENDUM #01	2026-05-22

CHECKED BY: WJM
DRAWN BY: AAS

THROWING EVENT LAYOUT PLAN

PF-1.04

Plot Stamp:
6/12/2026 12:21:14 PM

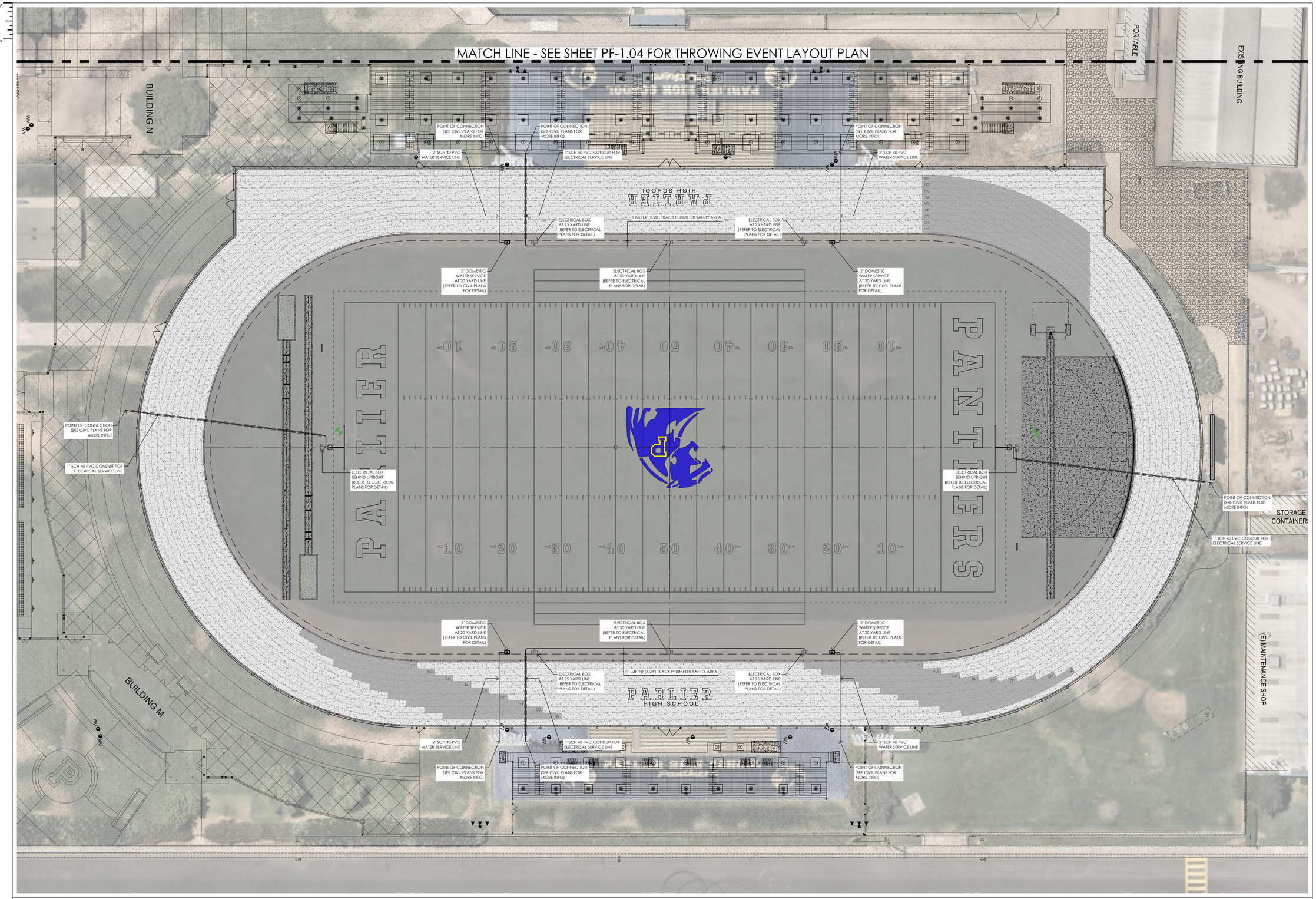

UTILITY NOTES:

1. ALL WATER LINES 3" DIA AND SMALLER SHALL BE PE 4710. ALL WATER AND IRRIGATION MAINS 4" DIA AND GREATER SHALL BE PVC, C-900, DR-18.
2. EXISTING IRRIGATION MAIN TO THE FIELD IS TO BE CAPPED.
3. ALL VALVE COVERS AND/OR PADS THAT ARE WITHIN, ADJACENT TO OR IN CLOSE PROXIMITY TO SIDEWALK SHALL BE ADJUSTED TO MATCH SIDEWALK GRADES.
4. UTILITY SYMBOLS ON THE PLAN MAY APPEAR LARGER THAN ACTUAL SIZE OR MOVED FROM INTENDED LOCATION FOR CLARITY. UTILITY APPURTENANCES ARE TO BE INSTALLED PER DETAILS IN PLAN SET OR REFERENCED STANDARD DETAILS.
5. MANATEE COUNTY PUBLIC WORKS UTILITY STANDARDS ARE THE MINIMUM ALLOWABLE WATER AND/OR WASTEWATER CONSTRUCTION STANDARDS. WHERE ANY NOTE OR DETAIL ON THESE PLANS CONFLICT WITH THE MANATEE COUNTY PUBLIC WORKS UTILITY STANDARDS THE MORE STRINGENT INTERPRETATION SHALL BE APPLIED.
6. PRIOR TO BEING PLACED IN SERVICE, ALL POTABLE WATER PIPELINES SHALL BE CHLORINATED IN ACCORDANCE WITH AWWA C651. THE LOCATION OF THE CHLORINATION AND SAMPLING POINTS SHALL BE DETERMINED BY THE ENGINEER OF RECORD, FDEP, AND/OR MANATEE COUNTY'S REPRESENTATIVE. TAPS FOR SAMPLING SHALL BE UNCOVERED AND BACKFILLED BY THE PIPELINE INSTALLER AS REQUIRED.
7. UTILITY CONTRACTOR SHALL DISINFECT PIPELINES AND HAVE PASSING BACTERIOLOGICAL TESTS PRIOR TO SYNTHETIC TURF PRESENT ON FIELD. IF RETESTING IS REQUIRED AFTER SYNTHETIC TURF IS INSTALLED, THE UTILITY CONTRACTOR IS RESPONSIBLE FOR PROTECTING THE SYNTHETIC TURF FROM ANY CHLORINE.
8. NO POTABLE WATER MAIN SHALL BE PLACED INTO SERVICE UNTIL THE RESULTS OF THE BACTERIOLOGICAL TESTS ARE SATISFACTORY AND THE FDEP HAS PROVIDED THE COUNTY WITH A WRITTEN LETTER OF ACCEPTANCE. POTABLE WATER SERVICES, FIRE SERVICE, AND FIRE HYDRANT LEADS THAT ARE EXEMPT FROM A PERMIT FROM THE FDEP BUT STILL REQUIRE BACTERIOLOGICAL SAMPLING IN ACCORDANCE WITH CHAPTER 62-555, FLORIDA ADMINISTRATIVE CODE, SHALL NOT BE PLACED INTO SERVICE UNTIL THE RESULTS OF THE BACTERIOLOGICAL TESTS ARE SATISFACTORY AND EOR HAS PROVIDED WRITTEN ACCEPTANCE.
9. ALL UTILITY ACCESS BOXES (DOMESTIC WATER SERVICE, VALVE BOX, ETC.) WITHIN THE SYNTHETIC TURF AREA ARE TO HAVE SYNTHETIC TURF FASTENED TO THE LID COVER, FLUSH WITH THE PLAYING FIELD ELEVATIONS.
10. CONTRACTOR TO REFER TO CIVIL & MEP PLANS FOR ADDITIONAL INFORMATION.
11. CONTRACTOR TO REVIEW GEOTECH REPORT IN REGARDS TO THE REQUIRED SUBGRADE COMPACTION AND ASPHALT SECTION.

LEGEND:

- DENOTES LIMITS OF SYNTHETIC TURF COVERAGE: (101,530 ± S.F. / 2.33 ± AC)
- DENOTES PROPOSED 400 METER ASPHALT RUNNING TRACK (92,505 ± S.F. / 1.21 ± AC)
- DENOTES PROPOSED CONCRETE SLABS FOR FIELD EVENT RUNWAYS (CONCRETE CURBS NOT INCLUDED) (7,425 S.F. / 0.17 AC)
- DETAIL LETTER / DETAIL SHEET / DETAIL DESCRIPTION
- EXISTING PERCOLATION TEST LOCATION

SCALE: 1" = 20'

0 10 20 40

N036° 37' 03.19" - W119° 31' 34.53"
CENTER OF FIELD

PBK

HOUSTON, TX
T: 713-600-4000

TX FIRM: BR 1608

www.pbk.com

PARLIER HIGH SCHOOL STADIUM REPLACEMENT

603 3rd STREET
PARLIER, CA 93648

DSA SUBMISSION - CONSTRUCTION DOCUMENTS

LICENSED ARCHITECT
MICHAEL R. SCHORR
No. C-33185
RENEWAL DATE
08/31/2027
STATE OF CALIFORNIA

CLIENT
PARLIER UNIFIED SCHOOL DISTRICT

DATE	PROJECT NUMBER
05/22/2026	250093

DRAWING HISTORY

No.	Description	Date
1	ADDENDUM #01	2026-05-22

CHECKED BY: WJM

DRAWN BY: AAS

PLAYING FIELD UTILITY PLAN

PF-1.05

Plot Stamp:
6/12/2026 12:21:25 PM

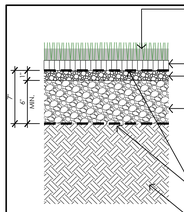

NOTES:

1. INFILL DEPTH SHALL BE INSTALLED AT ITS OPTIMUM DEPTH IN (MM) MANUFACTURER TO PROVIDE MIN/MAX AND OPTIMUM INFILL DEPTHS IN (MM)
2. BROCK INFILL OR APPROVED EQUAL; PER MANUFACTURERS RECOMMENDATION.
3. SILICA SAND (CLEAN AND WASHED)
4. WATER PERMEABILITY RATE OF SYNTHETIC TURF PRODUCT > 30 INCHES PER/HOUR.
5. COMPLETE SURFACE INFILTRATION WITH INFILL SHALL BE NO LESS THAN 10" PER HOUR WITH NO VISUAL STANDING OF WATER ON THE FINAL SURFACE.
6. G-MAX TESTING RESULTS SHALL BE NO GREATER THAN 200 G's DURING THE 8 YEAR WARRANTY PERIOD.

A TYPICAL SYNTHETIC TURF PROFILE WITH PAD
NOT TO SCALE — 2026

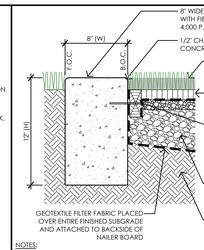

NOTES:

1. CONTRACTOR TO SLOPE SUB-GRADE AND DRAINAGE GRAVEL STONE TO ALLOW FOR POSITIVE SUB-SURFACE DRAINAGE FLOW TO PERFORATED COLLECTOR MAIN LINE.
2. TOP OF EXPOSED HEADER CURB TO BE BROOM FINISHED.
3. THE NAILER BOARD INSTALLATION MUST BE INSTALLED AS TO NOT RESULT IN ANY GAPS BETWEEN THE CONCRETE HEADER CURB AND FINISHED SYNTHETIC TURF INFILL.
4. THE NAILER BOARD SHALL BE FIELD ADJUSTED BASED ON THE FINAL TURF PILE HEIGHT AND INFILL MIX INSTALLED. THE INFILL MIX AND HEADER CURB MUST CREATE A SMOOTH TRANSITION.
5. REFER TO STRUCTURAL ENGINEERING PLANS FOR FOUNDATION DESIGN.

B SYNTHETIC TURF STANDARD ATTACHEMENT DETAIL
NOT TO SCALE — 2026

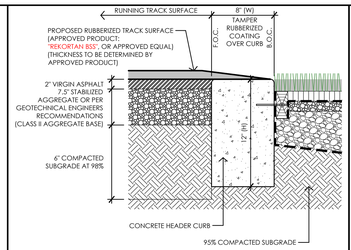

NOTES:

1. PROPOSED ASPHALT MIX SHALL BE VIRGIN ASPHALT WITH NO RECYCLABLE ASPHALT IN MIX AND SHALL HAVE A CURING TIME OF 28 DAYS MIN.
2. THICKNESS OF FINAL ASPHALT TO BE COORDINATED WITH RUBBERIZED TRACK SURFACING MANUFACTURER RECOMMENDATION.
3. FINISHED TRACK SLOPE TO BE 1.25% MIN FOR HIGH SCHOOL APPLICATIONS.
4. REFER TO STRUCTURAL ENGINEERING PLANS FOR FOUNDATION DESIGN.

C RUNNING TRACK PROFILE DETAIL
NOT TO SCALE — 2026

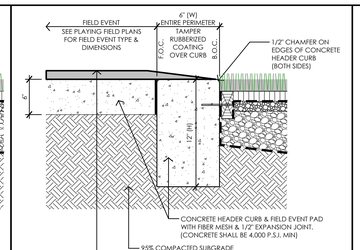

NOTES:

1. TOP OF EXPOSED CONCRETE TO BE BROOM FINISHED.
2. 4,000 P.S.I. CONCRETE MIX W/ FIBER MESH MIX .
3. DESIGN ASSUMES NO TURN DOWN CURB WAS INSTALLED AT EDGE OF FIELD EVENT AREAS.
4. REFER TO STRUCTURAL ENGINEERING PLANS FOR FOUNDATION DESIGN.

D FIELD EVENT HEADER CURB DETAIL
NOT TO SCALE — 2026

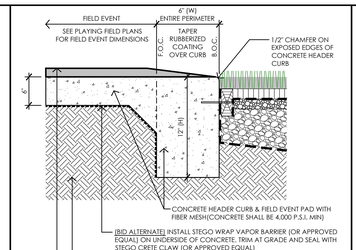

NOTES:

1. TOP OF EXPOSED CONCRETE TO BE BROOM FINISHED.
2. 4,000 P.S.I. CONCRETE MIX W/ FIBER MESH MIX .

E FIELD EVENT HEADER CURB DETAIL
NOT TO SCALE — BID ALTERNATE — 2026

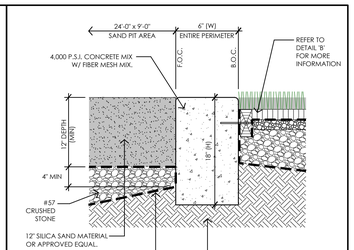

NOTES:

1. TOP OF CONCRETE TO BE BROOM FINISHED.
2. INSTALL 4" DRAINAGE PIPE WITHIN SAND PIT AND CONNECT TO PERIMETER COLLECTOR.
3. REFER TO STRUCTURAL ENGINEERING PLANS FOR FOUNDATION DESIGN.

F SYNTHETIC TURF ATTACHMENT AT SAND PIT
NOT TO SCALE — 2026

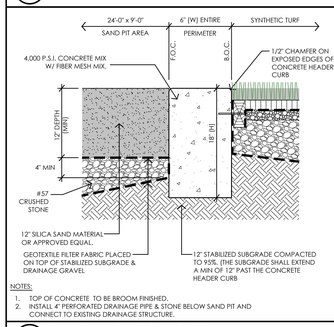

NOTES:

1. TOP OF CONCRETE TO BE BROOM FINISHED.
2. INSTALL 4" PERFORATED DRAINAGE PIPE & STONE BELOW SAND PIT AND CONNECT TO EXISTING DRAINAGE STRUCTURE. (SLOPED PER PLAN)

G LONG JUMP SAND PIT DETAIL
NOT TO SCALE — 2026

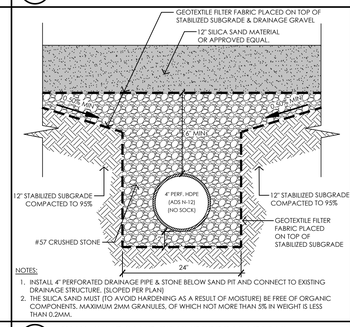

NOTES:

1. INSTALL 4" PERFORATED DRAINAGE PIPE & STONE BELOW SAND PIT AND CONNECT TO EXISTING DRAINAGE STRUCTURE. (SLOPED PER PLAN)
2. THE SILICA SAND MUST (TO AVOID HARDENING AS A RESULT OF MOISTURE) BE FREE OF ORGANIC COMPONENTS. MAXIMUM 2MM GRANULES, OF WHICH NOT MORE THAN 5% IN WEIGHT IS LESS THAN 0.2MM.

H LONG JUMP SAND PIT UNDERDRAIN DETAIL
NOT TO SCALE — 2026

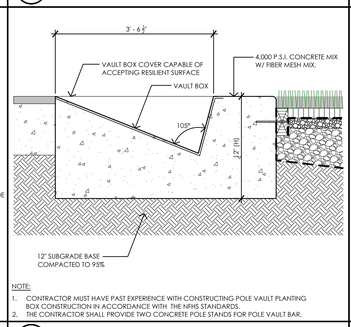

NOTE:

1. CONTRACTOR MUST HAVE PAST EXPERIENCE WITH CONSTRUCTING POLE VAULT PLANTING BOX CONSTRUCTION IN ACCORDANCE WITH THE NFHS STANDARDS.
2. THE CONTRACTOR SHALL PROVIDE TWO CONCRETE POLE STANDS FOR POLE VAULT BAR.

I POLE VAULT PIT PROFILE
NOT TO SCALE — 2026

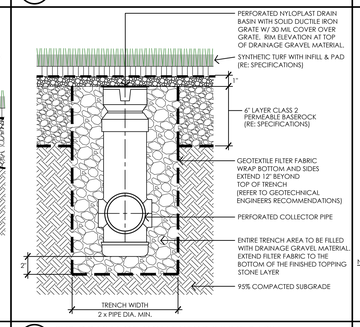

J SUB-DRAINAGE COLLECTOR INLINE BASIN
NOT TO SCALE — 2026

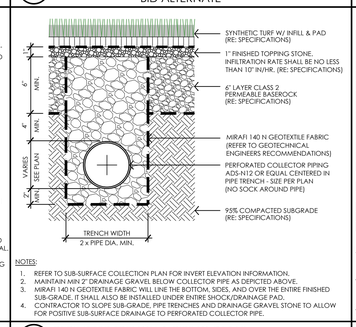

NOTES:

1. REFER TO SUB-SURFACE COLLECTION PLAN FOR INVERT ELEVATION INFORMATION.
2. MAINTAIN MIN 2" DRAINAGE GRAVEL BELOW COLLECTOR PIPE AS DEPICTED ABOVE.
3. MIRAFI 140 N GEOTEXTILE FABRIC WILL LINE THE BOTTOM, SIDES, AND OVER THE ENTIRE FINISHED SUB-GRADE. IT SHALL ALSO BE INSTALLED UNDER ENTIRE SHOCK/DRAINAGE PAD.
4. CONTRACTOR TO SLOPE SUB-GRADE, PIPE TRENCHES AND DRAINAGE GRAVEL STONE TO ALLOW FOR POSITIVE SUB-SURFACE DRAINAGE TO PERFORATED COLLECTOR PIPE.

K PERIMETER TRENCH & PIPING DETAIL
NOT TO SCALE — 2026

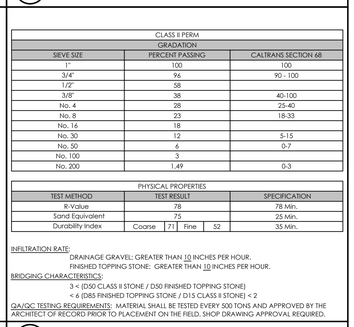

CLASS II PERM GRADATION		
SIEVE SIZE	PERCENT PASSING	CALTRANS SECTION 68
1"	100	100
3/4"	96	90 - 100
1/2"	58	
3/8"	38	40-100
No. 4	28	25-40
No. 8	23	18-33
No. 16	18	
No. 30	12	5-15
No. 50	6	0-7
No. 100	3	
No. 200	1.49	0-3

PHYSICAL PROPERTIES		
TEST METHOD	TEST RESULT	SPECIFICATION
R-Value	78	78 Min.
Sand Equivalent	75	25 Min.
Durability Index	Coarse 71 Fine 52	35 Min.

INFILTRATION RATE:
DRAINAGE GRAVEL: GREATER THAN 10 INCHES PER HOUR.
FINISHED TOPPING STONE: GREATER THAN 10 INCHES PER HOUR.

BRIDGING CHARACTERISTICS:
3 < (D50 CLASS II STONE / D50 FINISHED TOPPING STONE)
< 6 (D85 FINISHED TOPPING STONE / D15 CLASS II STONE) < 2

QA/QC TESTING REQUIREMENTS: MATERIAL SHALL BE TESTED EVERY 500 TONS AND APPROVED BY THE ARCHITECT OF RECORD PRIOR TO PLACEMENT ON THE FIELD, SHOP DRAWING APPROVAL REQUIRED.

L CLASS II PERMEABLE BASEROCK
NOT TO SCALE — 2026

#57 GRADATION		
SIEVE SIZE	PERCENT PASSING	CALTRANS
1"	100	88 - 100
3/4"	92	70 - 100
3/8"	15	0 - 30
No. 4	3	0 - 16
No. 8	2	0-6

PHYSICAL PROPERTIES		
TEST METHOD	TEST RESULT	SPECIFICATION
LA Rattler (500 Rev.)	32	45 Max.
Clearness Value	89	75 Min.
Durability Index	Coarse 87	N/A

INFILTRATION RATE:
DRAINAGE GRAVEL: GREATER THAN 10 INCHES PER HOUR.
FINISHED TOPPING STONE: GREATER THAN 10 INCHES PER HOUR.

BRIDGING CHARACTERISTICS:
3 < (D50 DRAINAGE GRAVEL / D50 FINISHED TOPPING STONE)
< 6 (D85 FINISHED TOPPING STONE / D15 DRAINAGE GRAVEL) < 2

QA/QC TESTING REQUIREMENTS: MATERIAL SHALL BE TESTED EVERY 500 TONS AND APPROVED BY THE ARCHITECT OF RECORD PRIOR TO PLACEMENT ON THE FIELD, SHOP DRAWING APPROVAL REQUIRED.

M #57 DRAINAGE GRAVEL MATERIAL
NOT TO SCALE — 2026

3/8" CRUSHED GRADATION		
SIEVE SIZE	PERCENT PASSING	VULCAN MATERIALS SPECIFICATION
1/2"	100	100
3/8"	93	85 - 100
No. 4	16	0 - 25
No. 8	4	0 - 6

PHYSICAL PROPERTIES		
TEST METHOD	TEST RESULT	SPECIFICATION
LA Rattler (500 Rev.)	30	45 Max.
Durability Index	Coarse 87	N/A
Fractures Faces	96	N/A

N 3/8" CRUSHED FINISHED TOPPING STONE
NOT TO SCALE — 2026

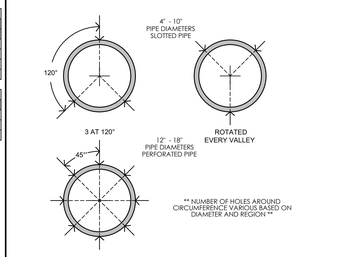

NOTES:

1. SHOP DRAWINGS MUST BE SUBMITTAL AND APPROVAL BY THE ENGINEER OF RECORD
2. CONTRACTOR SHALL INSPECT ALL PIPING PRIOR TO INSTALLATION FOR CORRECT NUMBER OF PERFORATED HOLES AND SLOTS.

O DUAL WALL HDPE PERFORATION DETAIL
NOT TO SCALE — 2026

AASHTO CLASS II PERFORATION

1. CLASS II PERFORATIONS SHALL BE LOCATED IN THE OUTSIDE VALLEYS OF THE CORRUGATIONS, BE CIRCULAR AND/OR SLOTTED AND EVENLY SPACED AROUND THE CIRCUMFERENCE AND LENGTH OF PIPE. THE WATER INLET AREA SHALL BE NO LESS THAN 0.945 in²/ft (20 cm²/m) FOR PIPE DIAMETERS 4- THROUGH 10 INCH (100-250mm), 1.42 in²/ft (30 cm²/m) FOR PIPE DIAMETERS 12-THROUGH 18 INCH (300-450 mm) AND 1.89 in²/ft (40 cm²/m) FOR PIPE DIAMETERS LARGER THAN AND EQUAL TO 24 INCHES (600mm). TABLE BELOW REPRESENTS ADS STANDARD PERFORATION PATTERNS FOR AASHTO CLASS II.

Nominal I.D.		Perforation Type	Maximum Slot Length or Diameter		Maximum Slot Width		Minimum Inlet Area	
in	mm		in	mm	in	mm	in²/ft	cm²/m
4	100	Slot	0.875	22	0.125	3	1.0	21
6	150	Slot	0.875	22	0.125	3	1.0	21
8	200	Slot	1.18	30	0.125	3	1.0	21
10	250	Slot	1.18	30	0.125	3	1.0	21
12	300	Circular	0.313	8	-	-	1.5	32
15	375	Circular	0.313	8	-	-	1.5	32
18	450	Circular	0.313	8	-	-	1.5	32
24	600	Circular	0.313	8	-	-	2.0	42
30	750	Circular	0.375	9.5	-	-	2.0	42
36	900	Circular	0.375	9.5	-	-	2.0	42
42	1054	Circular	0.375	9.5	-	-	2.0	42
48	1200	Circular	0.375	9.5	-	-	2.0	42
54	1350	Circular	0.375	9.5	-	-	2.0	42
60	1500	Circular	0.375	9.5	-	-	2.0	42

P STANDARD PERFORATION PATTERNS
NOT TO SCALE — 2026

Q NOT USED
NOT TO SCALE — 2026

ADS PERIMETER COLLECTOR PIPES AND TRENCH WIDTH REQUIREMENTS, UNLESS OTHERWISE DENOTED ON PLANS.

MINIMUM TRENCH WIDTHS	
PIPE DIAMETER INCHES (MM)	TRENCH WIDTH INCHES (M)
4 - 8 (100 - 200)	*
10 (250)	28 (0.7)
12 (300)	30 (0.8)
15 (375)	34 (0.9)
18 (450)	39 (1.0)
24 (600)	48 (1.2)
30 (750)	56 (1.4)
36 (900)	64 (1.6)
42 (1050)	72 (1.8)
48 (1200)	80 (2.0)
54 (1350)	88 (2.2)
60 (1500)	96 (2.4)

*Usually dependent on smallest bucket size available.

R MINIMUM TRENCH WIDTH TABLE
NOT TO SCALE — 2026

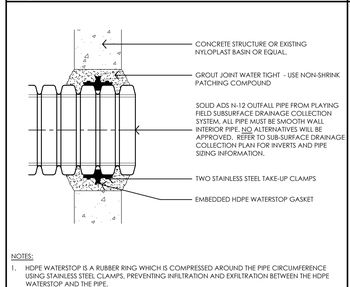

NOTES:

1. HDPE WATERSTOP IS A RUBBER RING WHICH IS COMPRESSED AROUND THE PIPE CIRCUMFERENCE USING STAINLESS STEEL CLAMPS, PREVENTING INFILTRATION AND EXFILTRATION BETWEEN THE HDPE WATERSTOP AND THE PIPE.
2. THE JOINT IS EITHER GROUTED INTO AN EXISTING STRUCTURE, OR HAS A NEW STRUCTURE POURED AROUND IT.
3. PIPE BENDING PER MANUFACTURERS SPECIFICATIONS.

S STORMWATER INLET CONNECTION
NOT TO SCALE — 2026

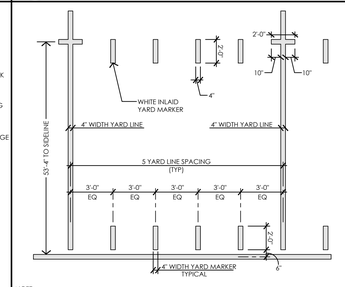

NOTE:

1. CONTRACTOR SHALL FIELD VERIFY ALL DIMENSIONS.
2. FINAL COLOR CHOICE PER OWNERS APPROVAL.

T YARD LINE MARKER DETAIL
NOT TO SCALE — 2026

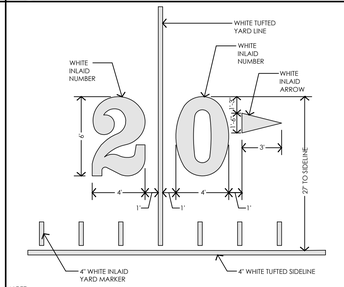

NOTE:

1. FOOTBALL FIELD FIELD MARKINGS TO BE WHITE IN COLOR.
2. FINAL COLOR CHOICE PER OWNERS APPROVAL.

U YARD LINE NUMBER DETAIL
NOT TO SCALE — 2026

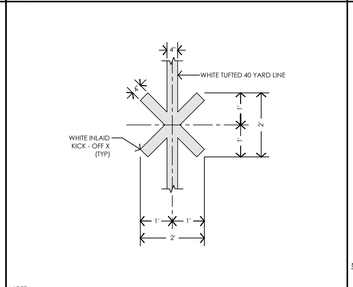

NOTE:

1. FOOTBALL FIELD MARKINGS TO BE WHITE IN COLOR.
2. FINAL COLOR CHOICE PER OWNERS APPROVAL.

V KICK - OFF X DETAIL
NOT TO SCALE — 2026

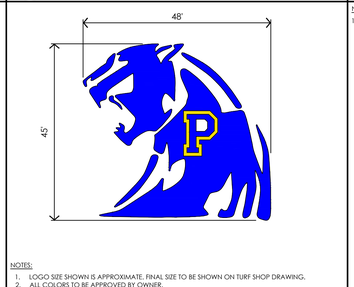

NOTES:

1. LOGO SIZE SHOWN IS APPROXIMATE, FINAL SIZE TO BE SHOWN ON TURF SHOP DRAWING.
2. ALL COLORS TO BE APPROVED BY OWNER.
3. LOGO TO BE ASSEMBLED AT THE TURF MANUFACTURE PLANT AND SHIPPED AS SINGLE ONE UNIT. PHOTO OF FINAL LOGO SHALL BE SENT TO THE CONTRACTOR/OWNER PRIOR TO SHIPMENT TO THE PROJECT SITE.

W MID-FIELD LOGO
NOT TO SCALE — 2026

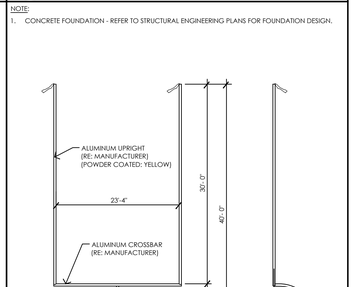

NOTE:

1. CONCRETE FOUNDATION - REFER TO STRUCTURAL ENGINEERING PLANS FOR FOUNDATION DESIGN.

X HIGH SCHOOL FIELD GOAL DETAIL
NOT TO SCALE — 2026

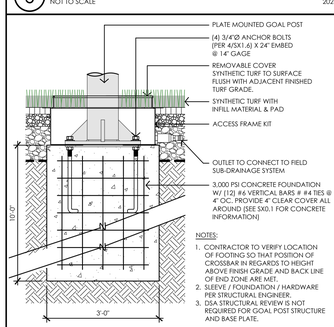

NOTES:

1. CONTRACTOR TO VERIFY LOCATION OF FOOTING SO THAT POSITION OF CROSSBAR IN REGARDS TO HEIGHT ABOVE FINISH GRADE AND BACK LINE OF END ZONE ARE MET.
2. SLEEVE / FOUNDATION / HARDWARE PER STRUCTURAL ENGINEER.
3. DSA STRUCTURAL REVIEW IS NOT REQUIRED FOR GOAL POST STRUCTURE AND BASE PLATE.

Y GOAL POST FOOTING / REMOVABLE DETAIL
NOT TO SCALE — 2026

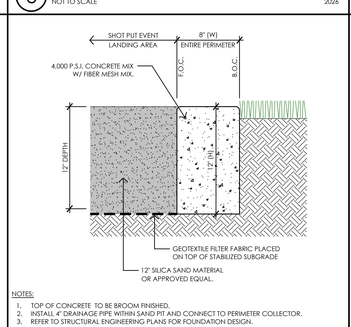

NOTES:

1. TOP OF CONCRETE TO BE BROOM FINISHED.
2. INSTALL 4" DRAINAGE PIPE WITHIN SAND PIT AND CONNECT TO PERIMETER COLLECTOR.
3. REFER TO STRUCTURAL ENGINEERING PLANS FOR FOUNDATION DESIGN.

Z SYNTHETIC GOAL POST COVER (A & B)
NOT TO SCALE — 2026

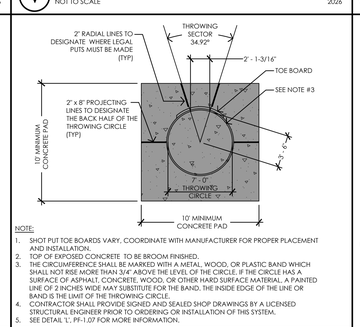

NOTE:

1. SHOT PUT TOE BOARDS VARY, COORDINATE WITH MANUFACTURER FOR PROPER PLACEMENT AND INSTALLATION.
2. TOP OF EXPOSED CONCRETE TO BE BROOM FINISHED.
3. THE CIRCUMFERENCE SHALL BE MARKED WITH A METAL, WOOD, OR PLASTIC BAND WHICH SHALL NOT RISE MORE THAN 3/4" ABOVE THE LEVEL OF THE CIRCLE. IF THE CIRCLE HAS A SURFACE OF ASPHALT, CONCRETE, WOOD, OR OTHER HARD SURFACE MATERIAL, A PAINTED LINE OF 2 INCHES WIDE MAY SUBSTITUTE FOR THE BAND. THE INSIDE EDGE OF THE LINE OR BAND IS THE LIMIT OF THE THROWING CIRCLE.
4. CONTRACTOR SHALL PROVIDE SIGNED AND SEALED SHOP DRAWINGS BY A LICENSED STRUCTURAL ENGINEER PRIOR TO ORDERING OR INSTALLATION OF THIS SYSTEM.
5. SEE DETAIL 'L', PF-1.07 FOR MORE INFORMATION.

A1 SHOT PUT EVENT LANDING AREA
NOT TO SCALE — 2026

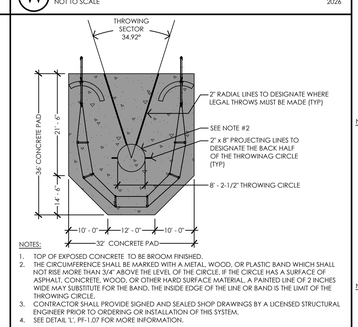

NOTES:

1. TOP OF EXPOSED CONCRETE TO BE BROOM FINISHED.
2. THE CIRCUMFERENCE SHALL BE MARKED WITH A METAL, WOOD, OR PLASTIC BAND WHICH SHALL NOT RISE MORE THAN 3/4" ABOVE THE LEVEL OF THE CIRCLE. IF THE CIRCLE HAS A SURFACE OF ASPHALT, CONCRETE, WOOD, OR OTHER HARD SURFACE MATERIAL, A PAINTED LINE OF 2 INCHES WIDE MAY SUBSTITUTE FOR THE BAND. THE INSIDE EDGE OF THE LINE OR BAND IS THE LIMIT OF THE THROWING CIRCLE.
3. CONTRACTOR SHALL PROVIDE SIGNED AND SEALED SHOP DRAWINGS BY A LICENSED STRUCTURAL ENGINEER PRIOR TO ORDERING OR INSTALLATION OF THIS SYSTEM.
4. SEE DETAIL 'L', PF-1.07 FOR MORE INFORMATION.

B1 SHOT PUT PAD SECTION
NOT TO SCALE — 2026

C1 DISCUS / HAMMERTHROW PAD SECTION
NOT TO SCALE — 2026

NFHS FOOTBALL RULES

A. THE GOAL IS THE VERTICAL PLANE MIDWAY BETWEEN THE SIDELINES EXTENDING INDEFINITELY ABOVE THE INSIDE OF THE UPRIGHTS AND THE FRONT EDGE OF THE CROSS-BAR AND IN THE SAME VERTICAL PLANE AS THE INSIDE EDGE OF THE END LINE.
B. THE TOP OF THE CROSSBAR SHALL BE 10 FEET ABOVE THE GROUND, MEASURED FROM THE BASE OF EACH UPRIGHT TO THE TOP OF THE CROSSBAR AT THE INTERSECTION, OR AT EACH END OF THE CROSSBAR PERPENDICULAR TO THE GROUND WHEN A SINGLE PEDESTAL IS USED.
C. THE CROSSBAR SHALL BE 23 FEET, 4 INCHES LONG.
D. THE UPRIGHTS SHALL BE 23 FEET, 4 INCHES APART INSIDE TO INSIDE AND EACH UPRIGHT MAY NOT EXCEED 4 INCHES IN WIDTH.
E. THE UPRIGHTS SHALL EXTEND A MINIMUM OF 30 FEET ABOVE THE CROSSBAR.
F. THE GOAL POSTS SHALL BE PADDED WITH RESILIENT, SHOCK ABSORBING MATERIAL TO A HEIGHT OF AT LEAST 6 FEET ABOVE THE GROUND.
G. THE HORIZONTAL CROSSBAR AND THE UPRI

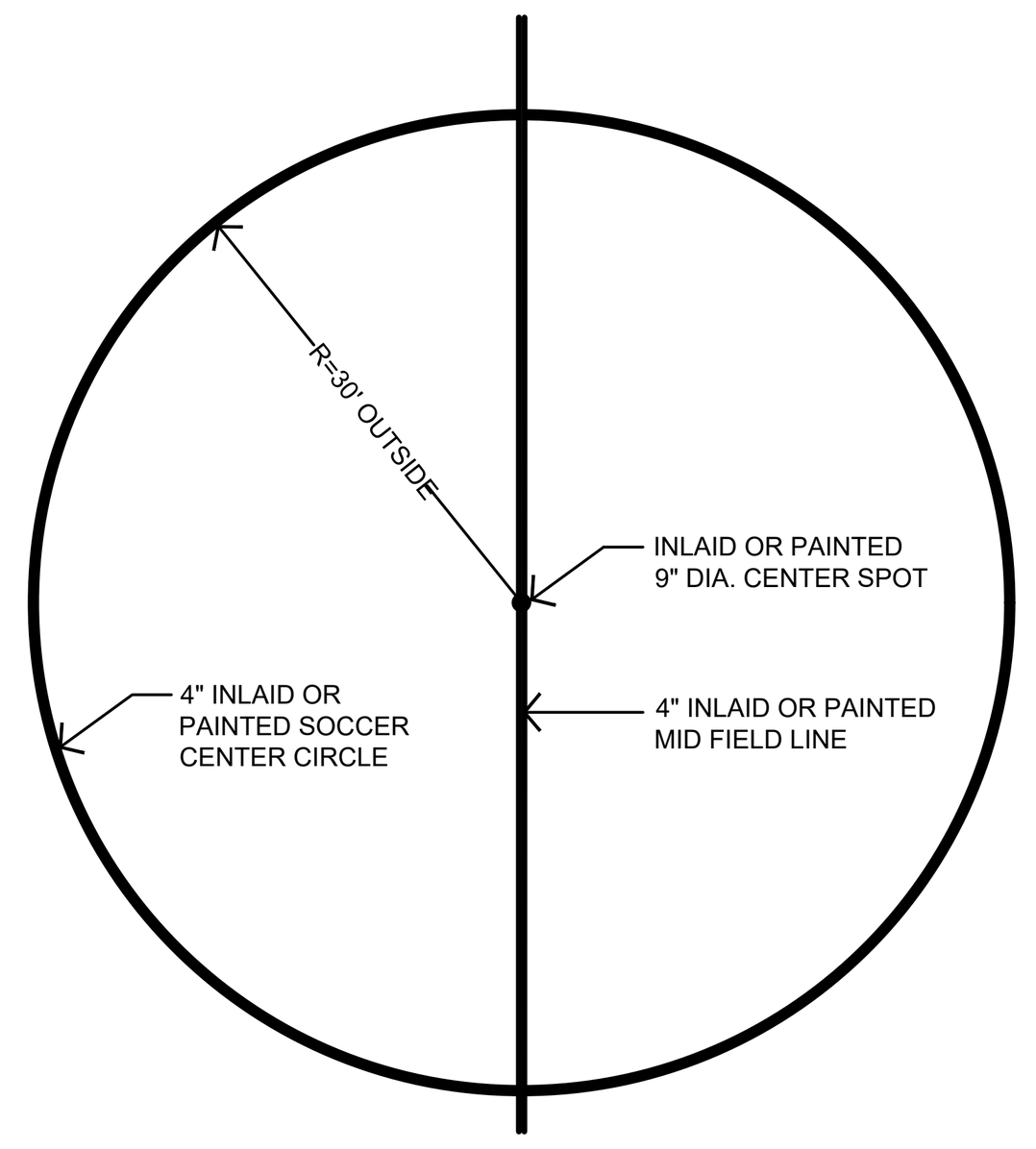

NOTE:
1. FULL SIZE SOCCER FIELD MARKINGS TO BE YELLOW IN COLOR.
2. FINAL COLOR CHOICE PER OWNERS APPROVAL.

A SOCCER CENTER CIRCLE DETAIL
NOT TO SCALE 2026

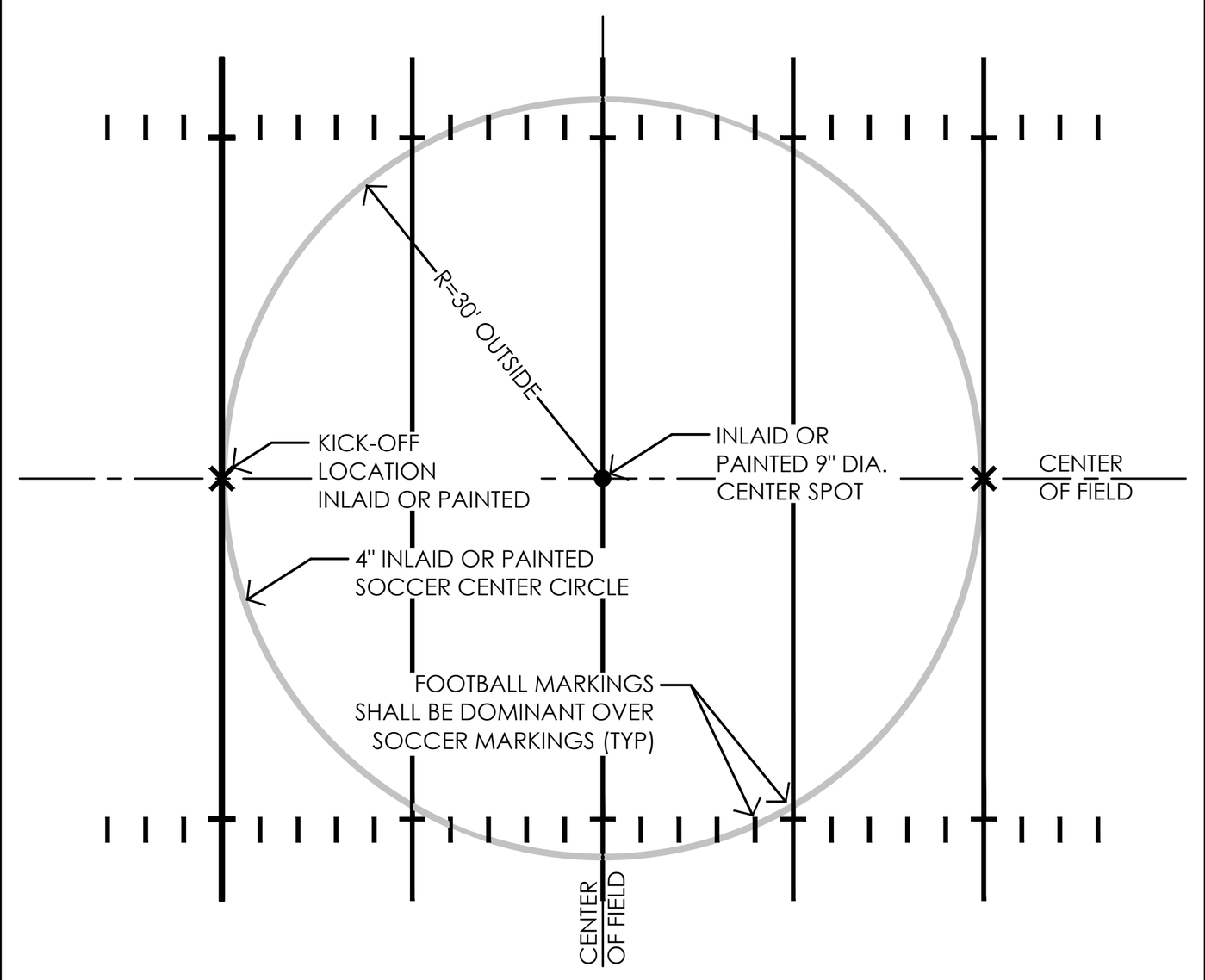

NOTE:
1. FULL SIZE SOCCER FIELD MARKINGS TO BE YELLOW IN COLOR.
2. FINAL COLOR CHOICE PER OWNERS APPROVAL.

B SOCCER CENTER CIRCLE DETAIL
NOT TO SCALE 2026

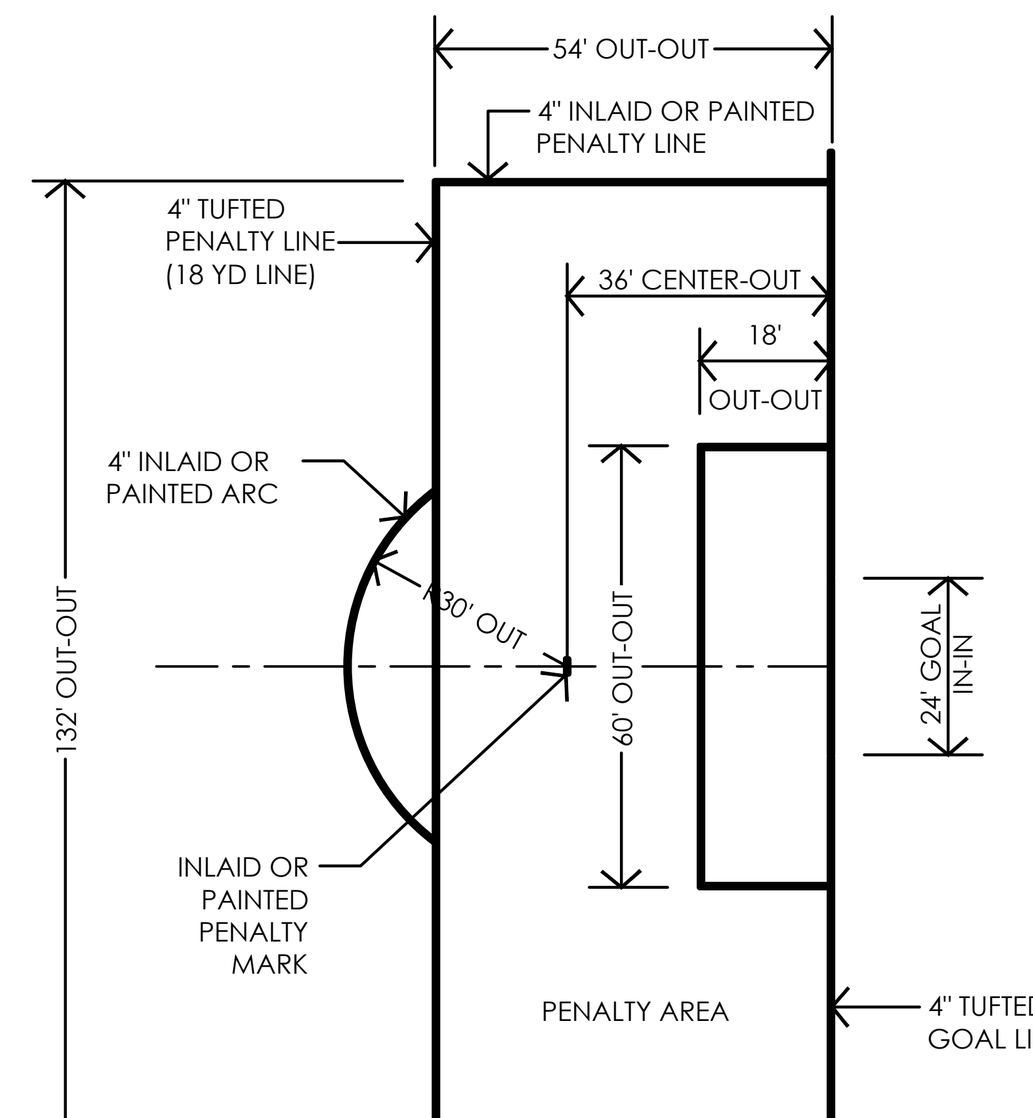

NOTE:
1. FULL SIZE SOCCER FIELD MARKINGS TO BE YELLOW IN COLOR.
2. FINAL COLOR CHOICE PER OWNERS APPROVAL.

C SOCCER PENALTY AREA MARKING DETAIL
NOT TO SCALE 2026

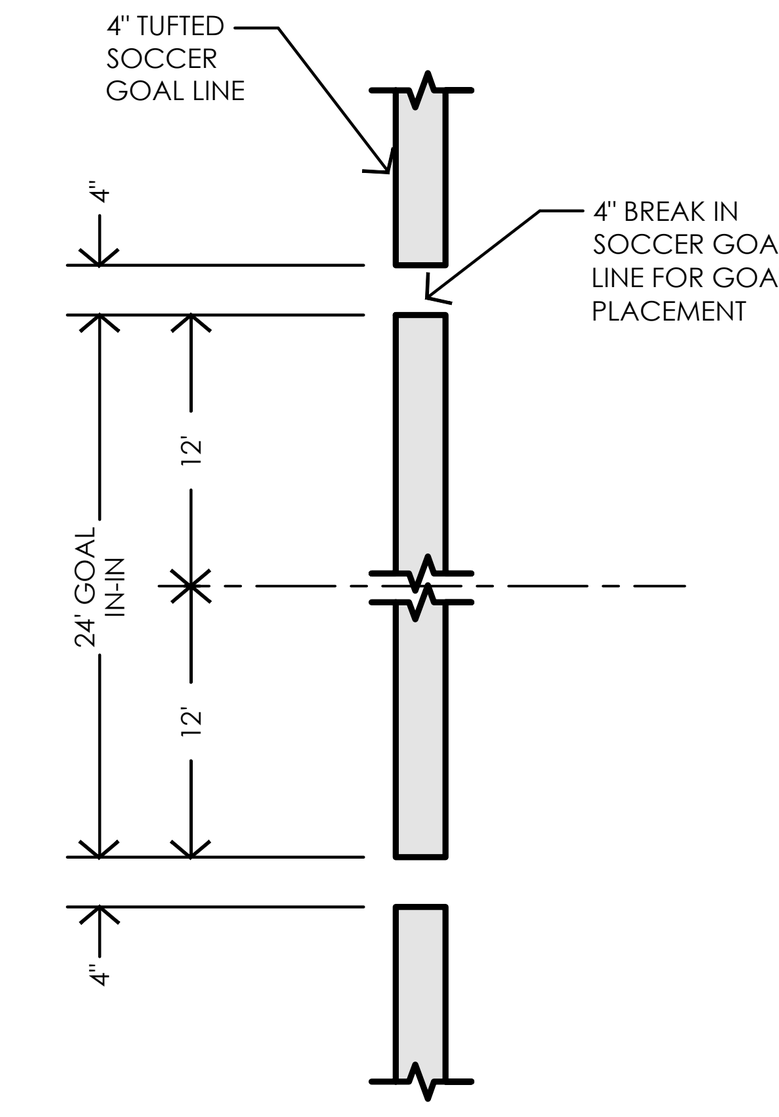

NOTE:
1. FULL SIZE SOCCER FIELD MARKINGS TO BE YELLOW IN COLOR.
2. FINAL COLOR CHOICE PER OWNERS APPROVAL.

D SOCCER GOAL AREA MARKING DETAIL
NOT TO SCALE 2026

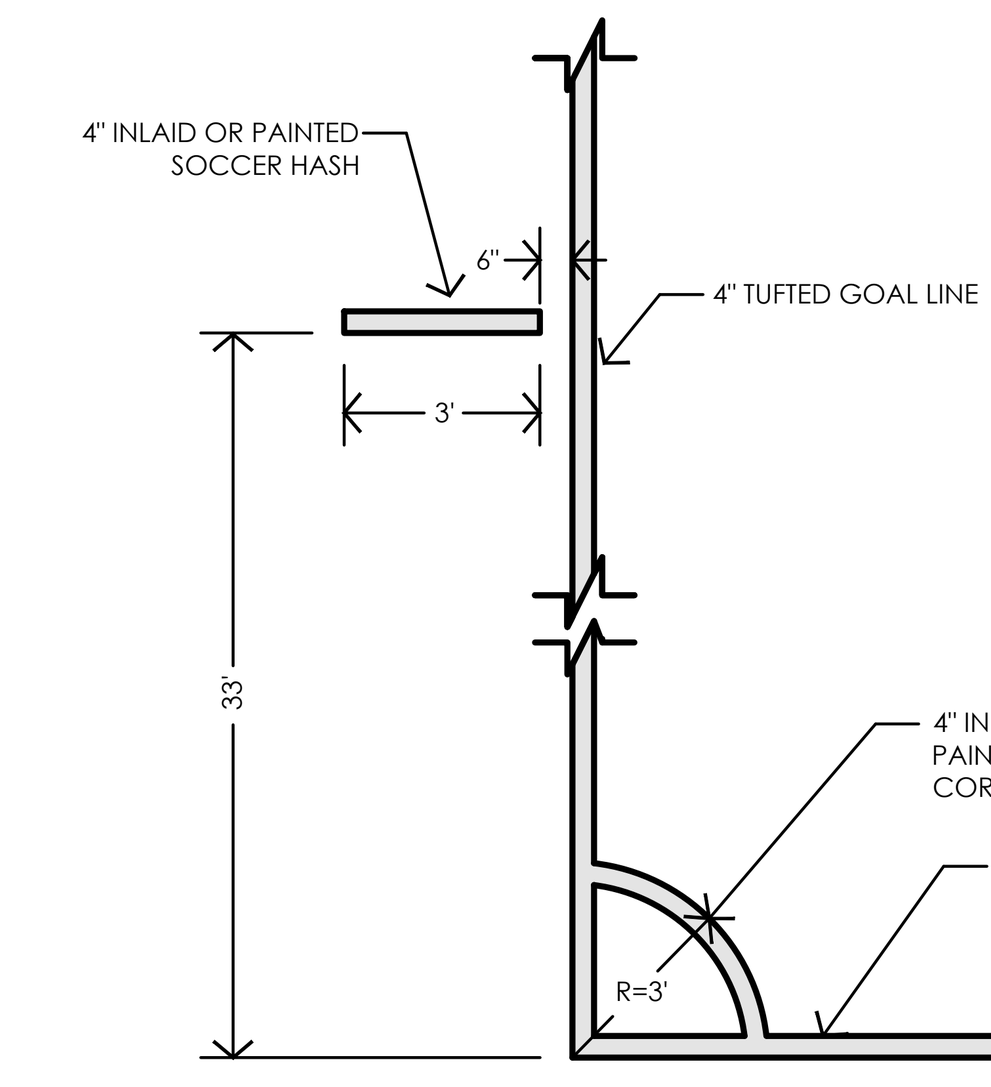

NOTE:
1. FULL SIZE SOCCER FIELD MARKINGS TO BE YELLOW IN COLOR.
2. FINAL COLOR CHOICE PER OWNERS APPROVAL.

E SOCCER CORNER KICK DETAIL
NOT TO SCALE 2026

1. FABRIC: 48" - 6 GAUGE FINISH "BLACK" (2" MESH) VINYL CHAIN LINK FABRIC. TOP OF FABRIC TO BE KNUCKLED TO ALLOW FOR PROTECTIVE CAP INSTALLATION.
2. TOP RAIL: 1 5/8" O.D. SCH 40 PIPE, 2.27 LBS. PER FOOT. TOP RAIL: 21' IN LENGTH, JOINED WITH 1 5/8" (6" LONG) PS SLEEVE.
3. LINE POST: CONTRACTOR SHALL PROVIDE SIGNED AND SEALED SHOP DRAWINGS BY A LICENSED STRUCTURAL ENGINEER PRIOR TO ORDERING OR INSTALLATION OF THIS SYSTEM.
4. TERMINAL POST: CONTRACTOR SHALL PROVIDE SIGNED AND SEALED SHOP DRAWINGS BY A LICENSED STRUCTURAL ENGINEER PRIOR TO ORDERING OR INSTALLATION OF THIS SYSTEM.
5. BRACING: TERMINAL POSTS BRACED AND TRUSSED TO THE NEAREST LINE POST WITH 1 5/8" O.D. SCH 40 PIPE AND 3/8" PS THREADED TRUSS ROD & PS TRUSS ROD TIGHTENER. 1 5/8" O.D. SCH 40 PIPE, 2.27 LBS. PER FOOT, USED FOR BOTTOM RAIL.
6. FITTINGS: PS PLAIN BRACE BAND & CARRIAGE BOLT W/NUT, PS COMBO RAIL END, PS LINE RAIL CLAMPS, PS LOOP CAP, PS DOME CAP, 3/4" PS TENSION BAR, PS PLAIN TENSION BAND & CARRIAGE BOLT W/NUT.
7. TIE WIRE: 8 1/4" ALUMINUM CUT/HOOK 9 GAUGE, TIE WIRE & 6 1/2" ALUMINUM CUT/HOOK 6 GAUGE. TIE WIRE SPACED 15" ON CENTER FOR LINE POSTS & 24" ON CENTER FOR RAILS.
8. POST FOOTING: CONTRACTOR SHALL PROVIDE SIGNED AND SEALED SHOP DRAWINGS BY A LICENSED STRUCTURAL ENGINEER PRIOR TO ORDERING OR INSTALLATION OF THIS SYSTEM.

ALL FENCING MATERIALS SHALL REQUIRE SHOP DRAWING APPROVAL PRIOR TO ORDERING OR INSTALLING ANY FENCING. ALL LOCAL PERMITS MUST BE OBTAINED BY THE FENCING CONTRACTOR.

F CHAIN LINK FENCING SPECIFICATIONS
NOT TO SCALE 2026

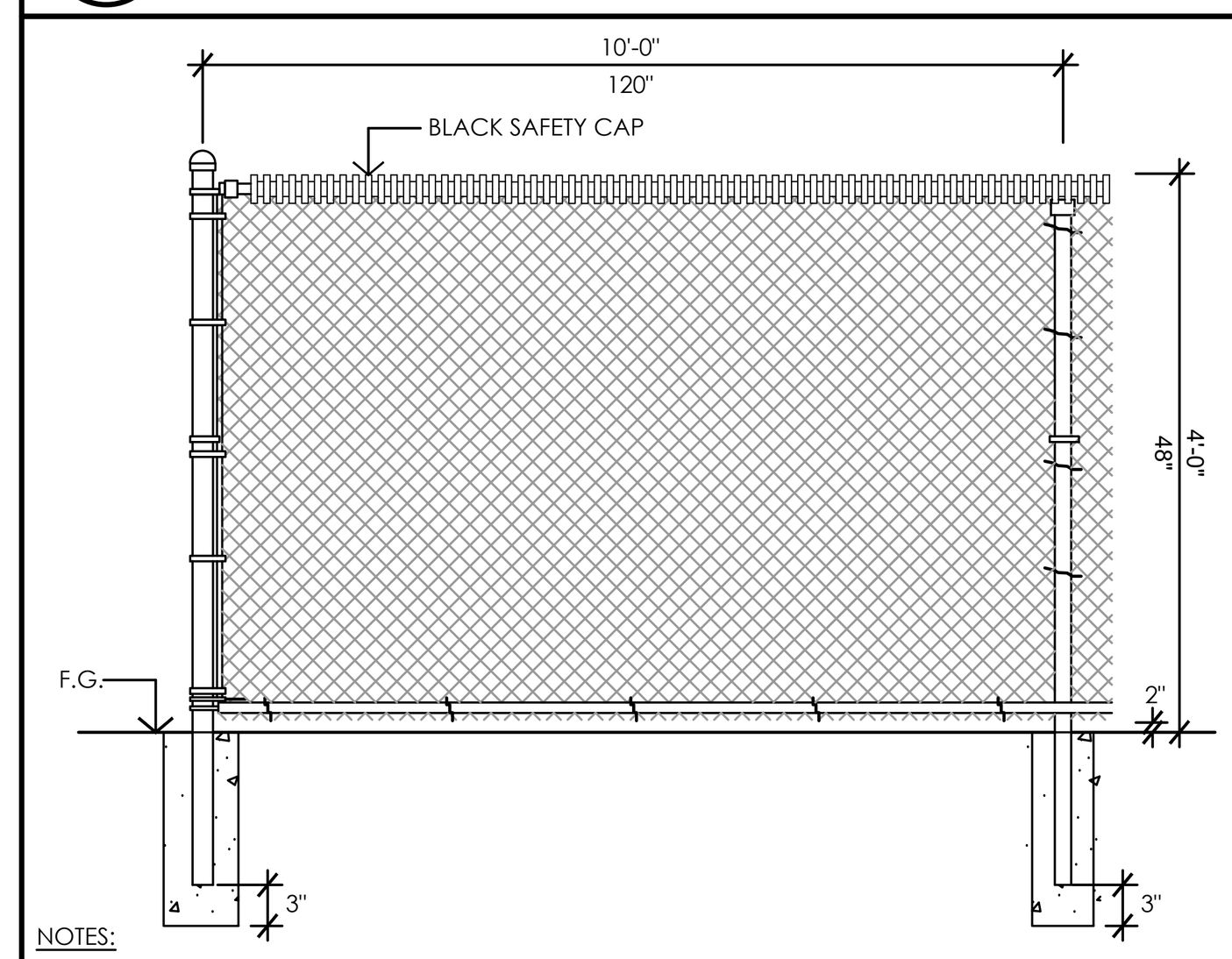

NOTES:
1. 4' HIGH CHAIN LINK FENCING TO HAVE TOP AND BOTTOM RAILS.
2. SMOOTH SIDE OF FABRIC TO FACE FIELD.
3. TOP & BOTTOM OF FABRIC TO HAVE NO SHARP EDGES. (KNUCKLED)
4. CONTRACTOR SHALL PROVIDE SIGNED AND SEALED SHOP DRAWINGS BY A LICENSED STRUCTURAL ENGINEER PRIOR TO ORDERING OR INSTALLATION OF THIS SYSTEM.

G STANDARD 4' - 8' HIGH CHAIN LINK FENCE
NOT TO SCALE 2026

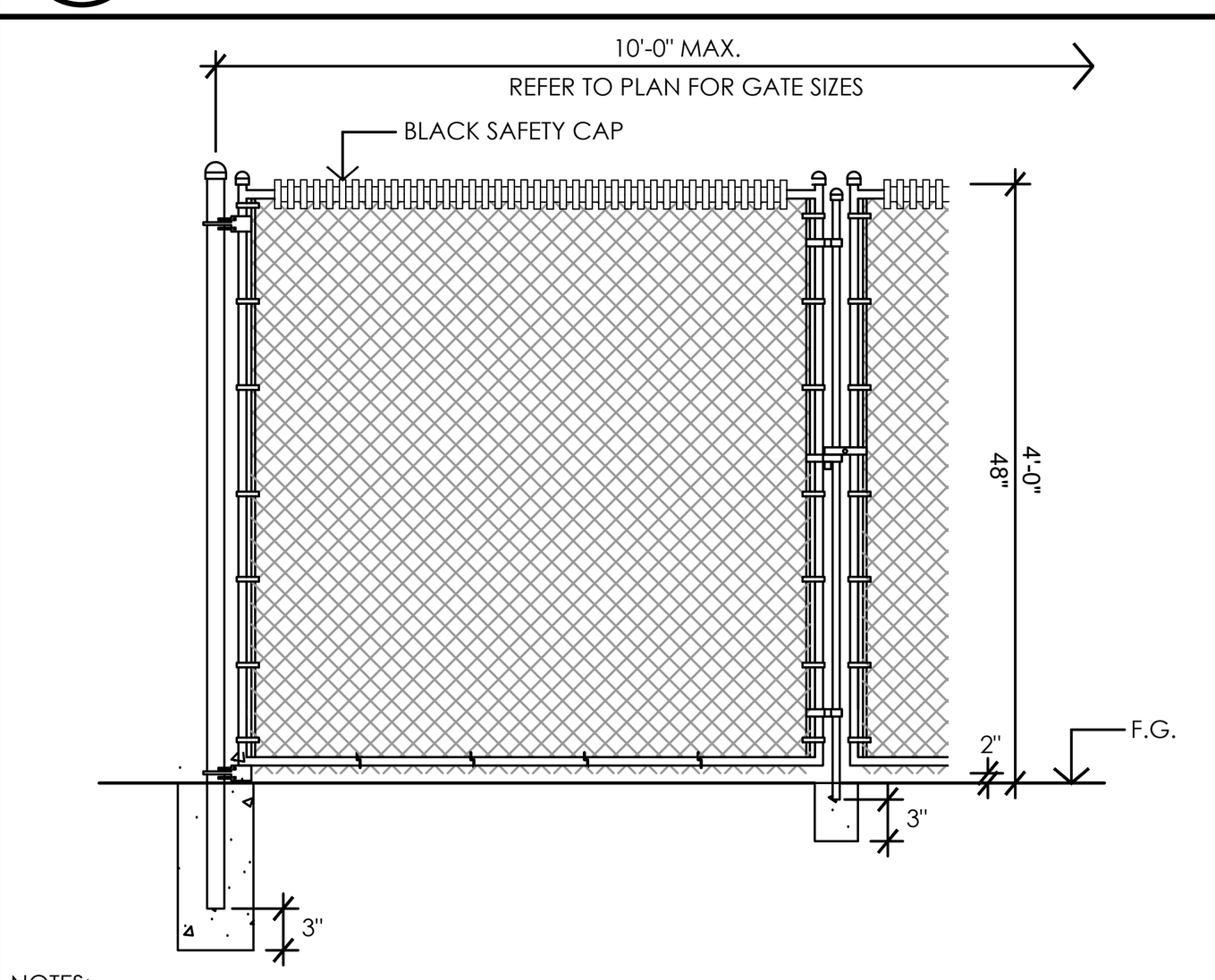

NOTES:
1. 180º HINGE W/ LOCKING ACCESS POST AND CENTER TIE DOWN ROD.
2. SMOOTH SIDE OF FABRIC TO FACE FIELD.
3. TOP & BOTTOM OF FABRIC TO HAVE NO SHARP EDGES. (KNUCKLED)
4. CONTRACTOR SHALL PROVIDE SIGNED AND SEALED SHOP DRAWINGS BY A LICENSED STRUCTURAL ENGINEER PRIOR TO ORDERING OR INSTALLATION OF THIS SYSTEM.

H STANDARD DOUBLE CHAIN LINK GATE
NOT TO SCALE 2026

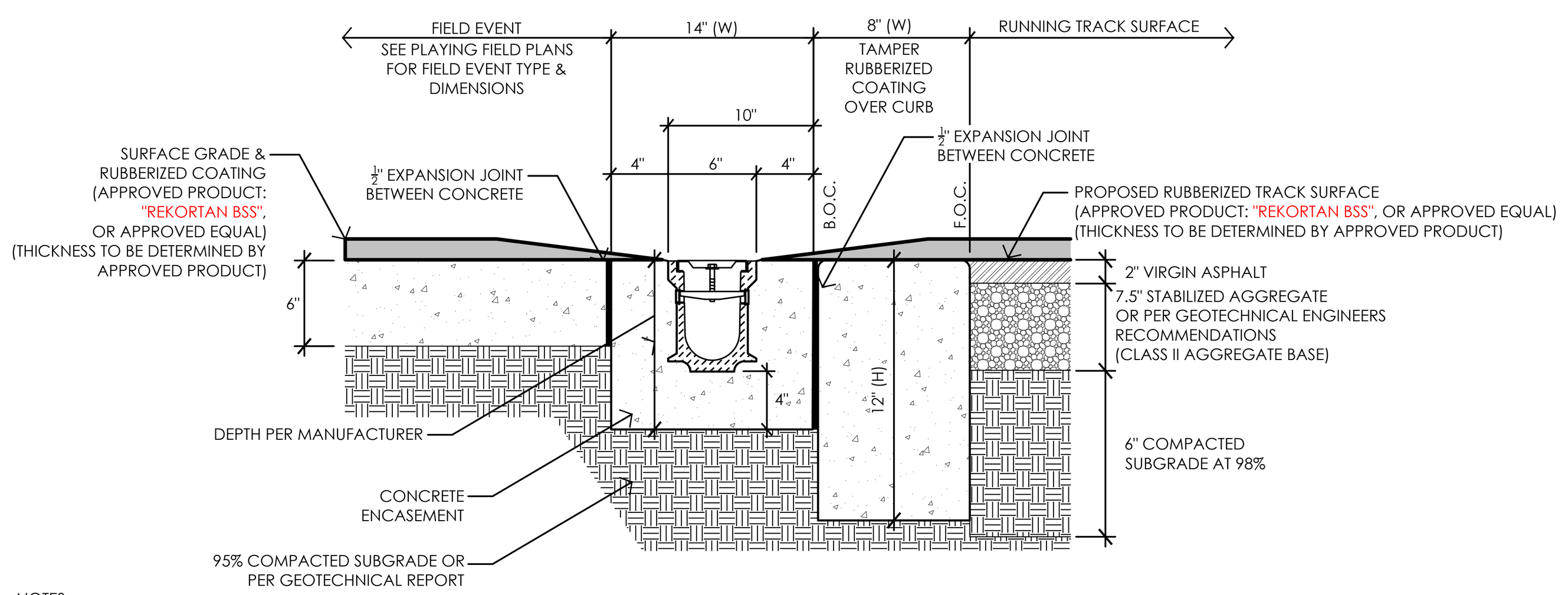

NOTES:
1. CONCRETE FOR TRENCH DRAIN WILL BE A MONOLITHIC POUR. CONCRETE THICKNESS AND REINFORCEMENT PER STRUCTURAL ENGINEER'S SPECIFICATION FOR THIS APPLICATION.
2. ACO 4000 SERIES TRENCH DRAIN WITH A SPIKE PROOF GRATE (BLACK PLASTIC #97393).
3. INSTALL A 1/2" EXPANSION JOINT BETWEEN THE EXISTING FIELD WALL AND THE TRENCH DRAIN CONCRETE, CAULK JOINT SURFACE.
4. DO NOT INSTALL TRENCH DRAIN AT ENTRY LOCATIONS.
5. BSS RUBBERIZED TRACK SYSTEM SHALL HAVE A MINIMUM OF A 2 YEAR WARRANTY FROM DATE OF ACCEPTANCE.

I TRACK PERIMETER WITH ACO NON-SLOPE DRAIN
NOT TO SCALE 2026

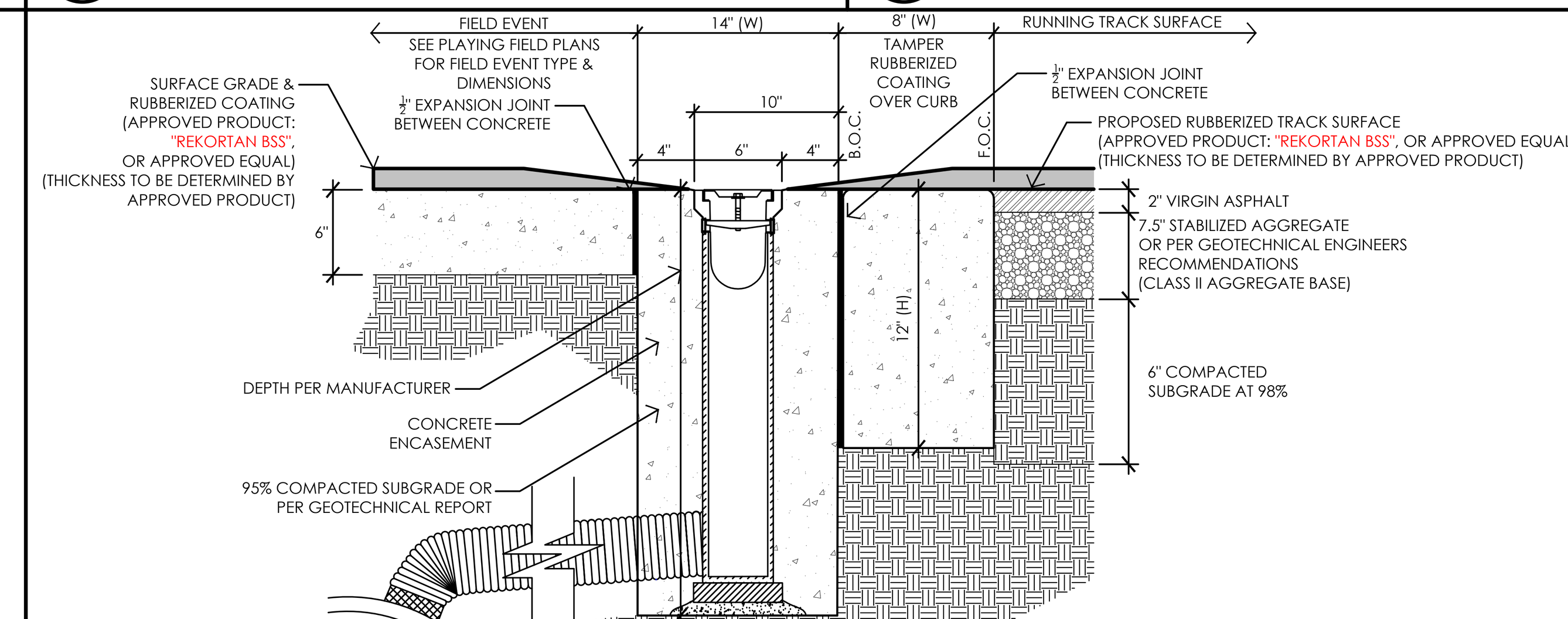

NOTES:
1. CONCRETE FOR TRENCH DRAIN WILL BE A MONOLITHIC POUR. CONCRETE THICKNESS AND REINFORCEMENT PER STRUCTURAL ENGINEER'S SPECIFICATION FOR THIS APPLICATION.
2. ACO 4000 SERIES TRENCH DRAIN WITH A SPIKE PROOF GRATE (BLACK PLASTIC #97393).
3. INSTALL A 1/2" EXPANSION JOINT BETWEEN THE EXISTING FIELD WALL AND THE TRENCH DRAIN CONCRETE, CAULK JOINT SURFACE.
4. DO NOT INSTALL TRENCH DRAIN AT ENTRY LOCATIONS.
5. BSS RUBBERIZED TRACK SYSTEM SHALL HAVE A MINIMUM OF A 2 YEAR WARRANTY FROM DATE OF ACCEPTANCE.

J TRACK PERIMETER WITH ACO CATCH BASIN
NOT TO SCALE 2026

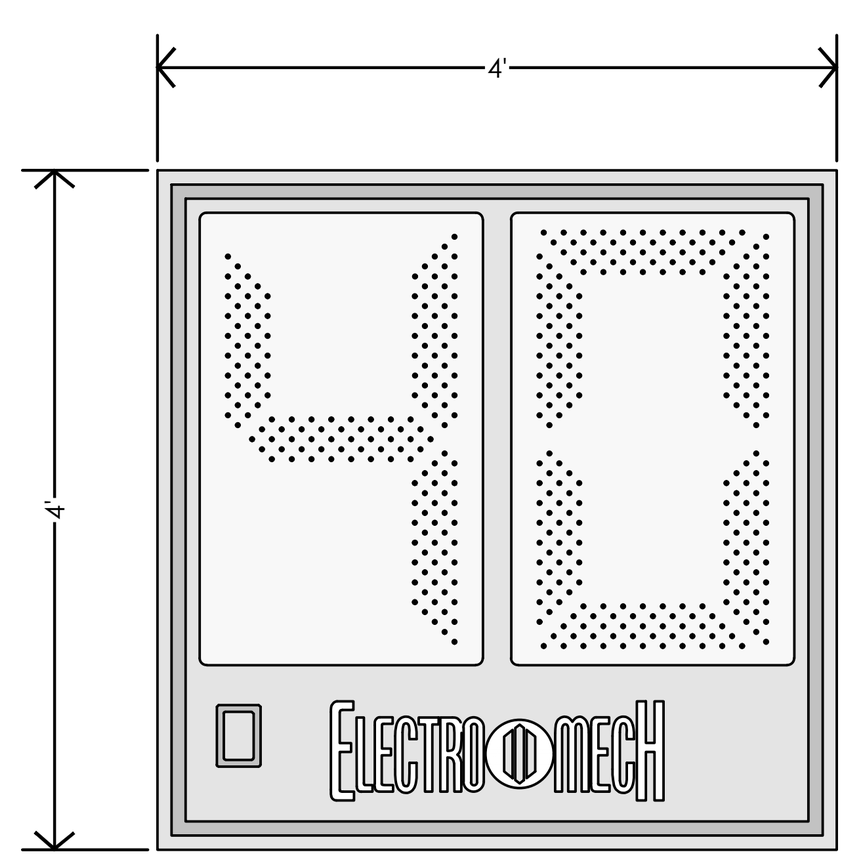

NOTES:
1. ELETRO-MECH MODEL # LX3070 OR APPROVED EQUAL.
2. MOUNTING POST MUST BE PADDED.
3. FINAL COLOR TO BE APPROVED BY OWNER.
4. CONTRACTOR SHALL PROVIDE SIGNED AND SEALED SHOP DRAWINGS BY A LICENSED STRUCTURAL ENGINEER PRIOR TO ORDERING OR INSTALLATION OF THIS SYSTEM.

K GAME CLOCK
NOT TO SCALE 2026

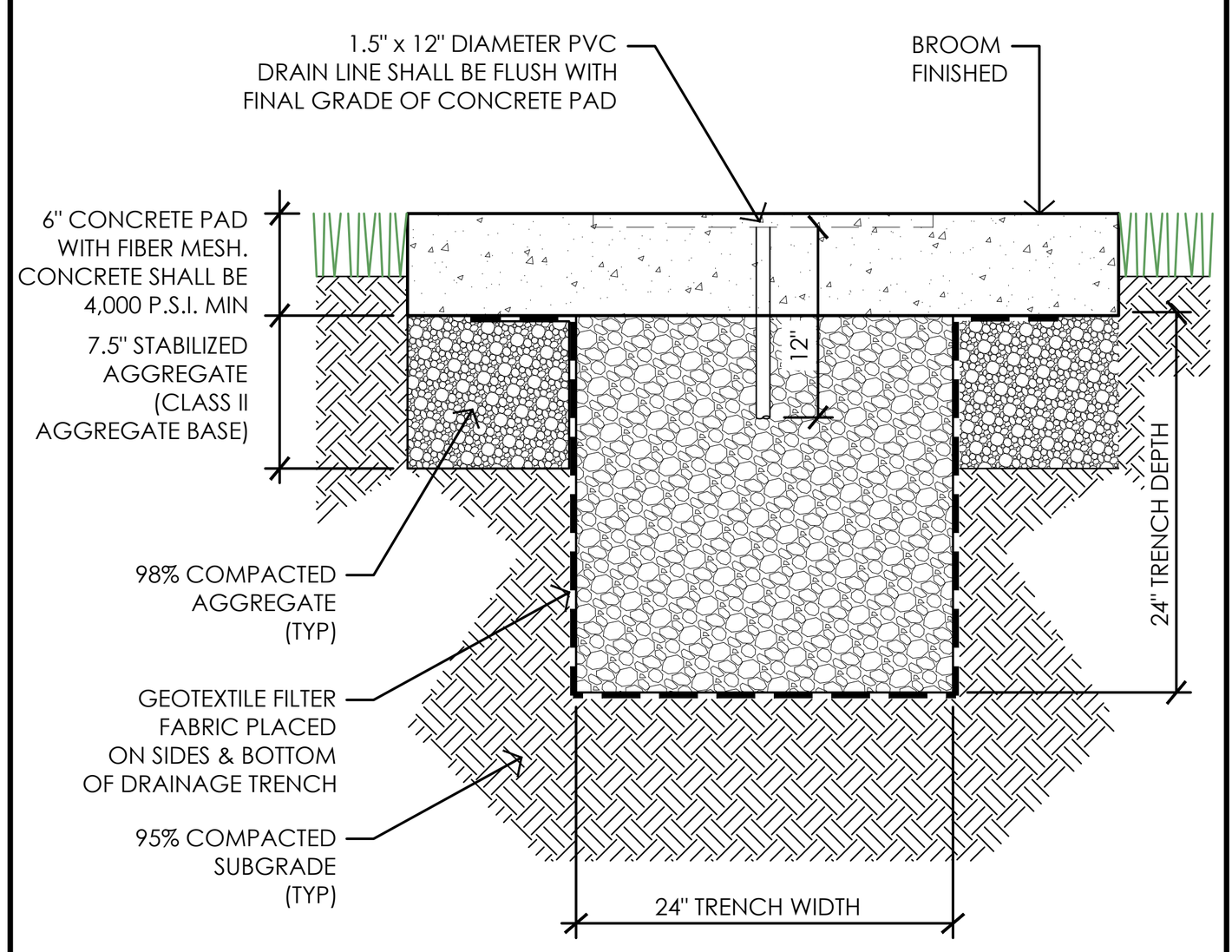

L THROWING EVENT PAD DETAIL
NOT TO SCALE 2026

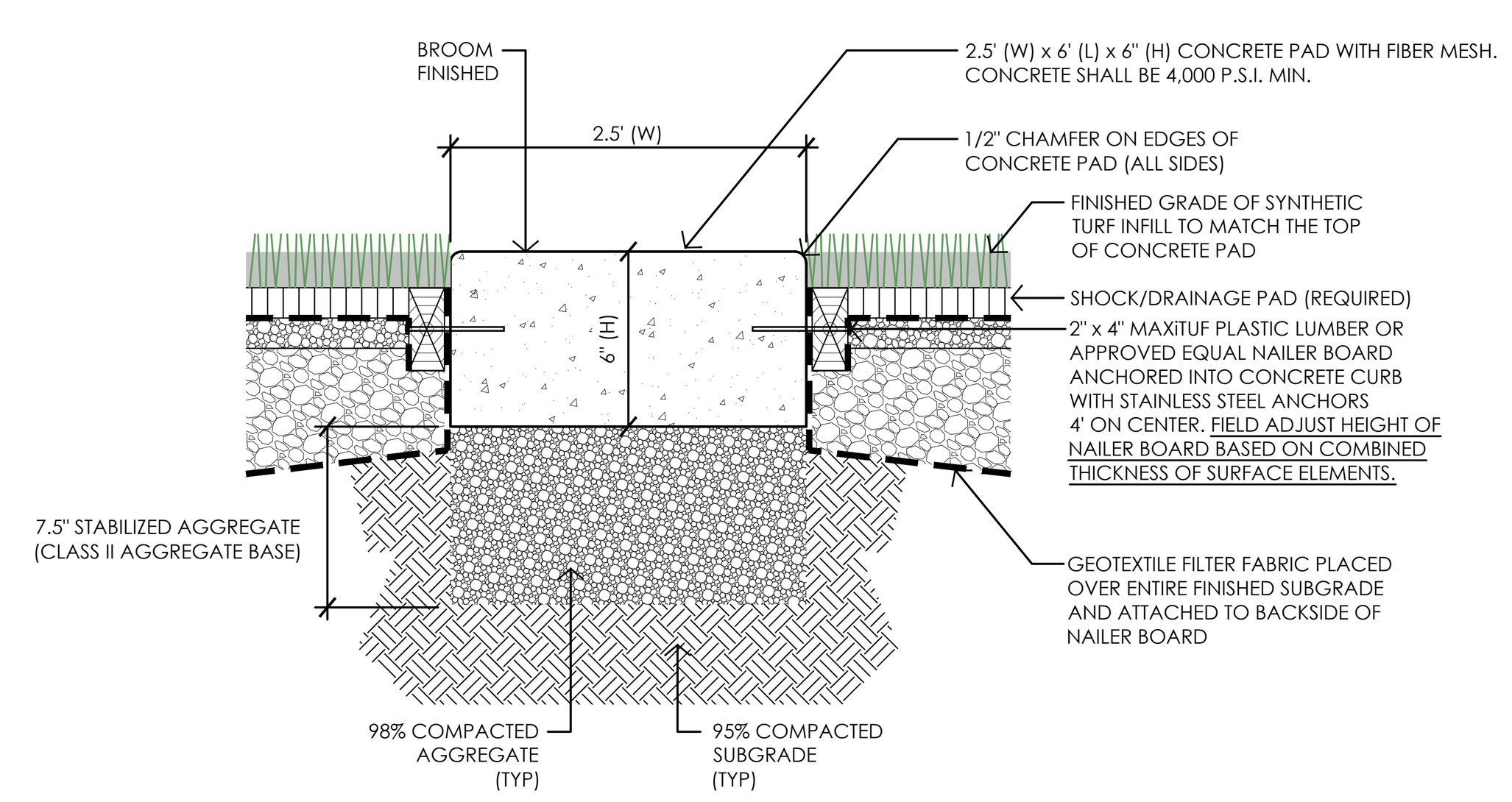

M POLE VAULT STANDARD CONCRETE PAD DETAIL
NOT TO SCALE 2026

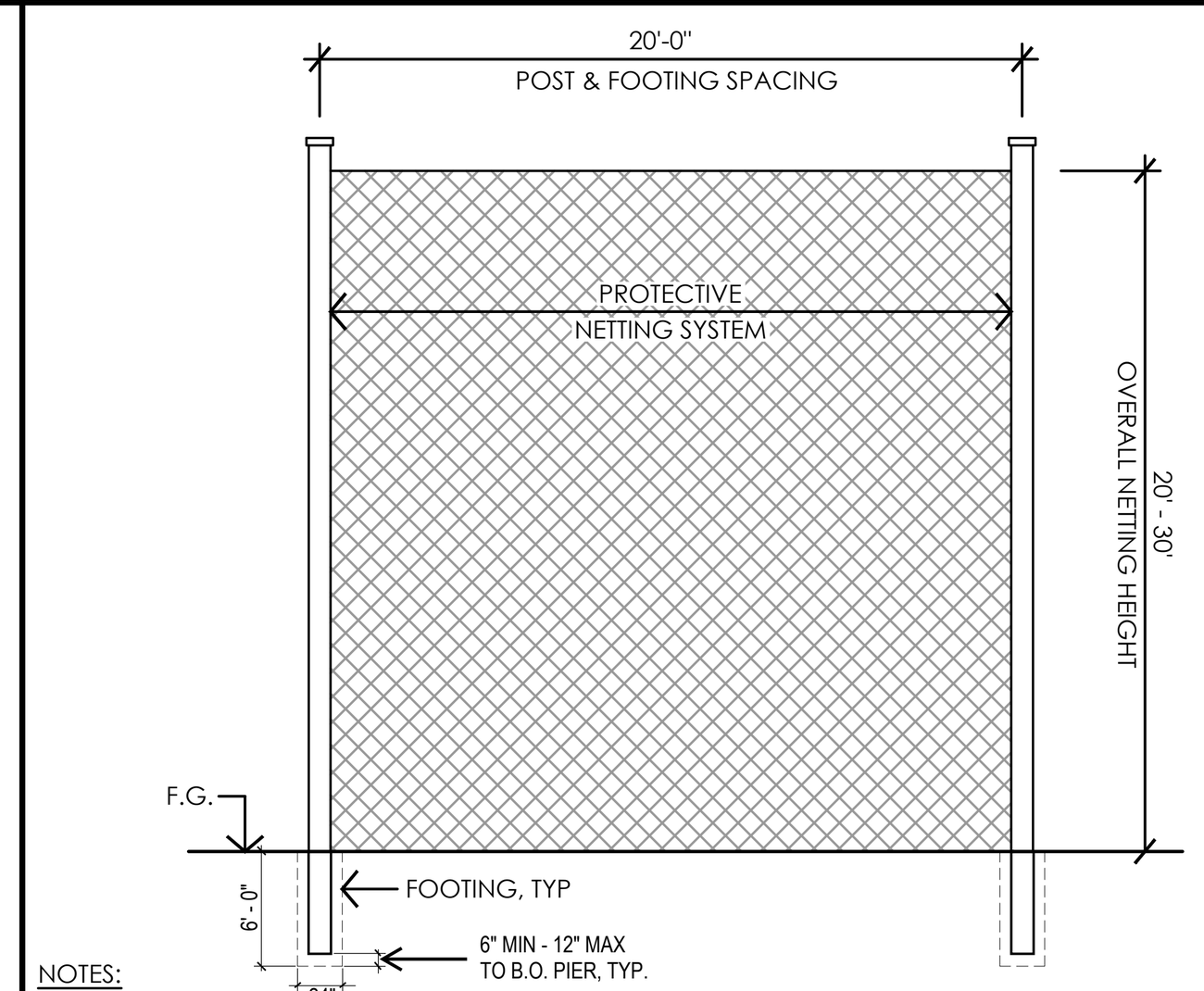

NOTES:
1. RECOMMENDED NETTING SYSTEM: MODEL BSS420 & BSS630 BY SPORTSFIELD SPECIALTIES, INC. OR APPROVED EQUAL.
2. POST SPACED EVERY 20 FOOT ON CENTER.
3. LOCATIONS AS DENOTED ON PLAYING FIELD LAYOUT & MATERIAL PLANS.
4. SHOP DRAWING APPROVAL REQUIRED. CONTRACTOR REQUIRED TO PROVIDE SIGNED AND SEALED SHOP DRAWINGS OF FOOTINGS.

N PROTECTIVE NETTING SYSTEM DSA STRUCTURAL REVIEW IS NOT REQUIRED (BID ALTERNATE #7)
NOT TO SCALE 2026

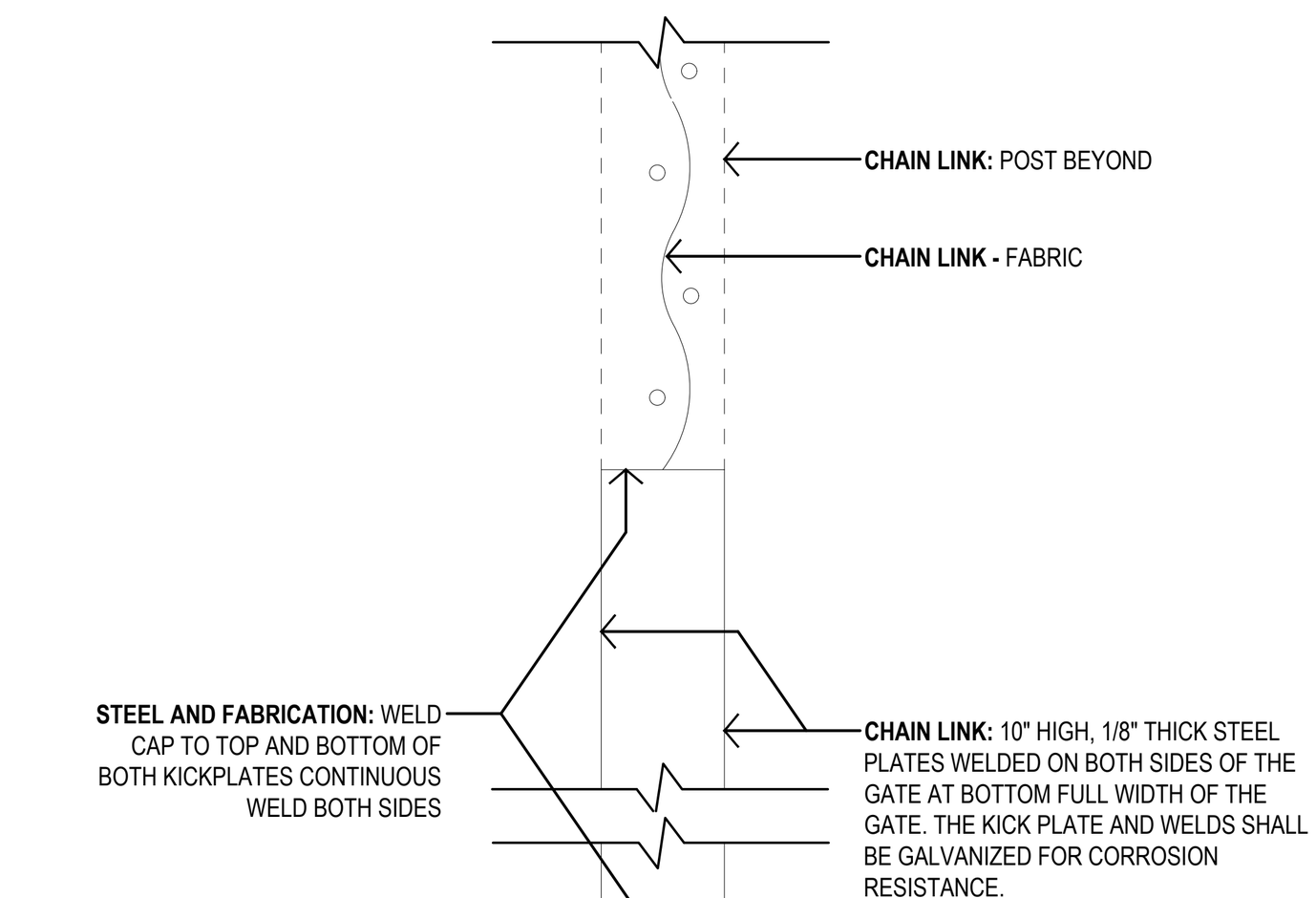

L5 CHAIN LINK - GATE SILL SECTION
NOT TO SCALE 2026

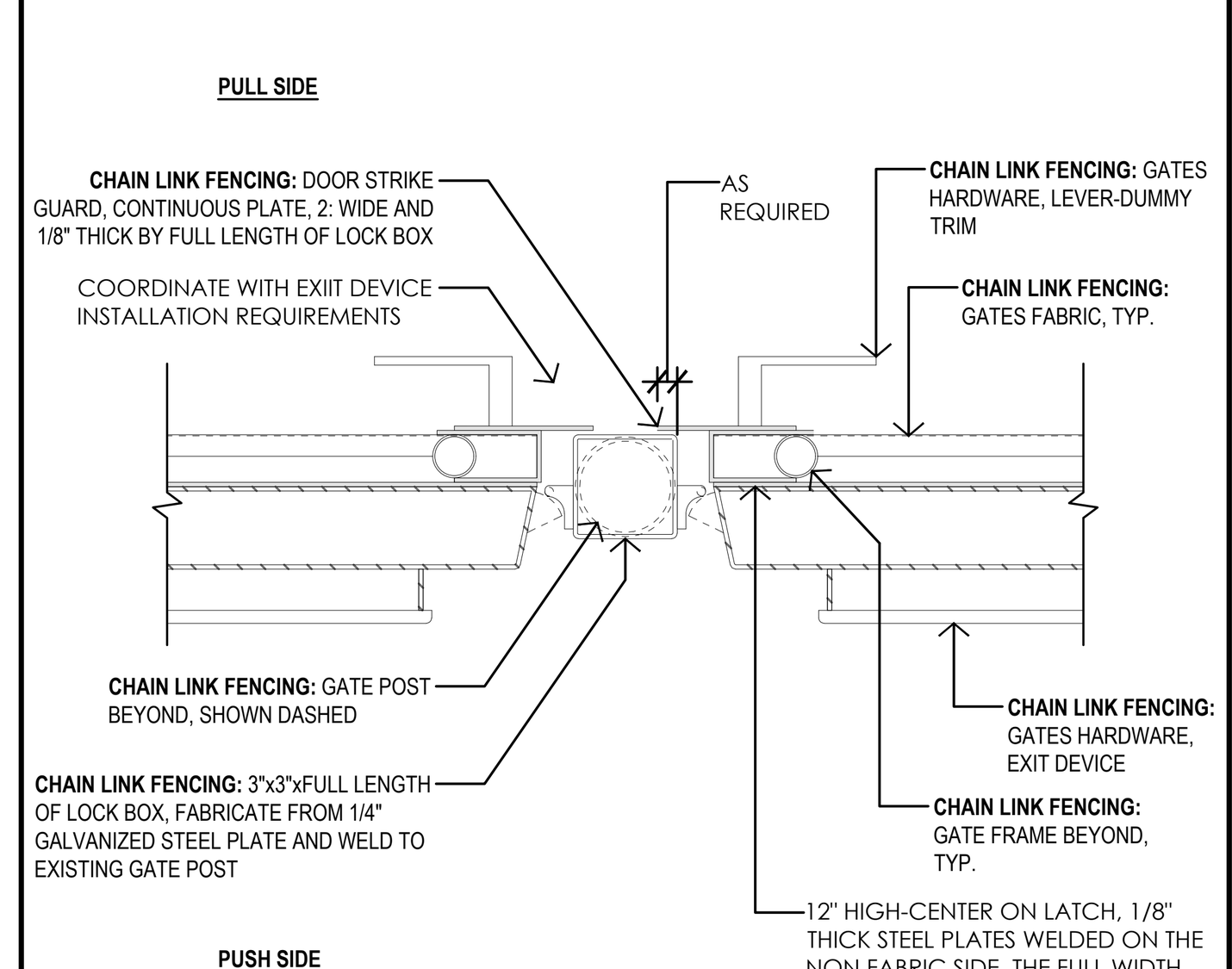

H5 CHAIN LINK - GATE STRIKE W/ EXIT DEVICE & LEVER HANDLE
NOT TO SCALE 2026

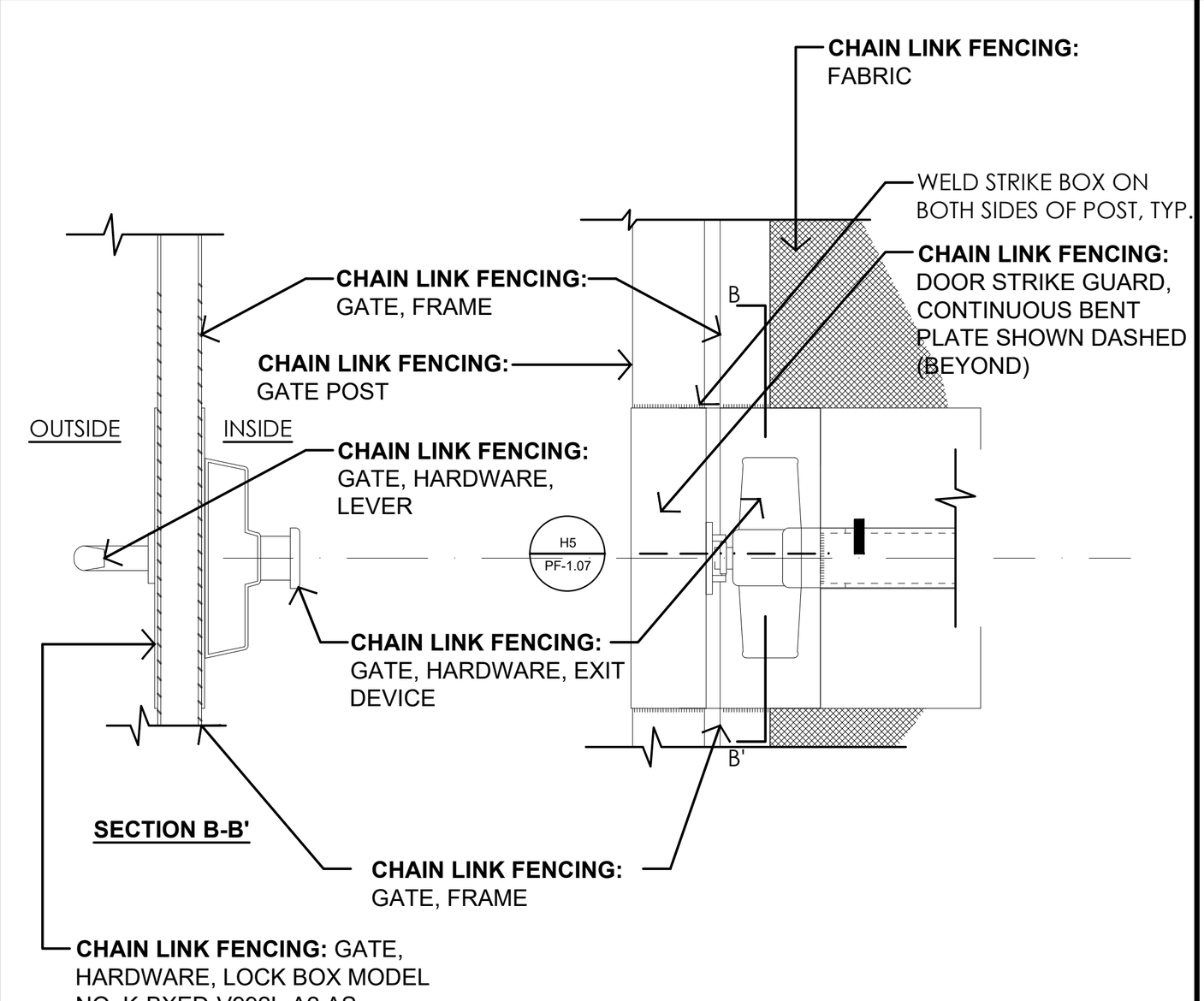

D9 CHAIN LINK - GATE STRIKE W/ EXIT DEVICE SECTIONS
NOT TO SCALE 2026

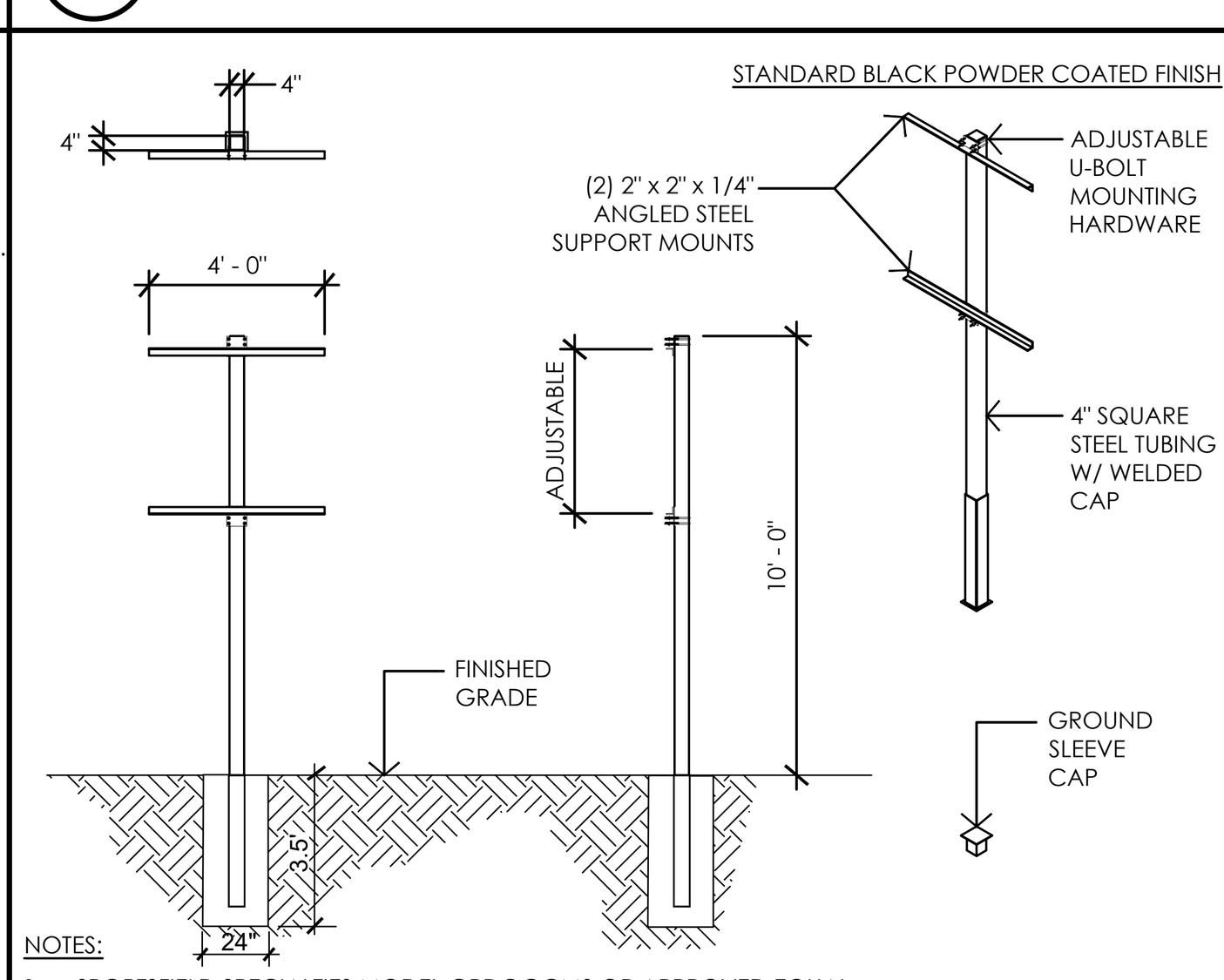

NOTES:
1. SPORTSFIELD SPECIALTIES MODEL GPDOGCMS OR APPROVED EQUAL.
2. MOUNTING POST MUST BE PADDED. FINAL COLOR TO BE APPROVED BY OWNER.
3. THE CONTRACTOR TO CONFIRM THAT THE PROPOSED GAME CLOCK IS COMPATIBLE WITH THIS POST SYSTEM PRIOR TO SHOP DRAWING SUBMISSION.
4. CONTRACTOR SHALL PROVIDE SIGNED AND SEALED SHOP DRAWINGS BY A LICENSED STRUCTURAL ENGINEER PRIOR TO ORDERING OR INSTALLATION OF THIS SYSTEM.

O GAME CLOCK MOUTNING SYSTEM
NOT TO SCALE 2026

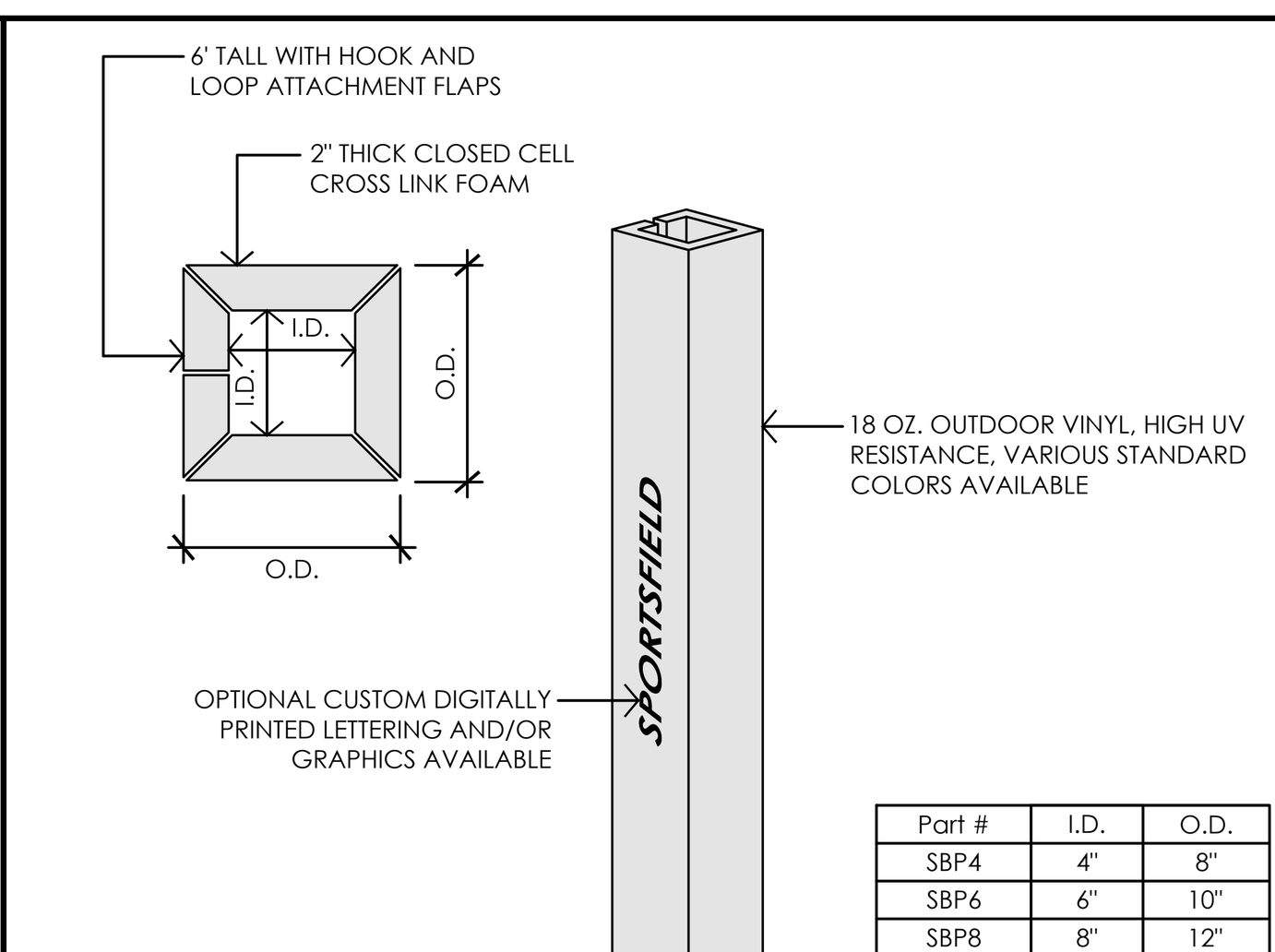

Part #	I.D.	O.D.
SBP4	4"	8"
SBP6	6"	10"
SBP8	8"	12"
SBP10	10"	14"
SBP12	12"	16"
SBP14	14"	18"
SBP16	16"	20"
SBP18	18"	22"
SBP20	20"	24"

NOTES:
1. SPORTSFIELD SPECIALTIES MODEL SBP OR APPROVED EQUAL.
2. FINAL COLOR TO BE APPROVED BY OWNER.
3. PAD DIMENSIONS TO BE PROVIDED PRIOR TO MANUFACTURING.

P GAME CLOCK POST PADDING DETAIL
NOT TO SCALE 2026

* NOT USED
NOT TO SCALE 2026

* NOT USED
NOT TO SCALE 2026

CHAIN LINK POST AND FOOTING SCHEDULE				
MAX. FENCE HEIGHT	LINE POSTS		TERMINAL/ CORNER POSTS	
	POST	FOOTING	POST	FOOTING
4'-0": TYP. UNLESS OTHERWISE NOTED	2-3/8" O.D.	10" dia. x 3'-0" D.	2-7/8" O.D.	12" dia. x 3'-6" D.

POST & FOOTING SIZES ARE MINIMAL UNLESS SPECIFICALLY DETAILED & NOTED OTHERWISE

CHAIN LINK GATE POST AND FOOTING SCHEDULE		
MAX. GATE LEAF WIDTH	GATE POST	POST FOOTINGS
3'-0" THRU 6'-0"	2-7/8" O.D.	12" DIA. x 3'-0" D.
8'-0" THRU 13'-0"	4" O.D.	18" DIA. x 4'-0" D.
OVER 13'-0"	4" O.D.	12" DIA. x 5'-0" D.

GATE POSTS & FOOTING SIZES ARE MINIMUM UNLESS SPECIFICALLY DETAILED & NOTED OTHERWISE.
NOTE: WHEN TERMINAL POSTS ARE GREATER THAN GATE POSTS, USE TERMINAL POST & FOOTING SIZES FOR GATE POSTS

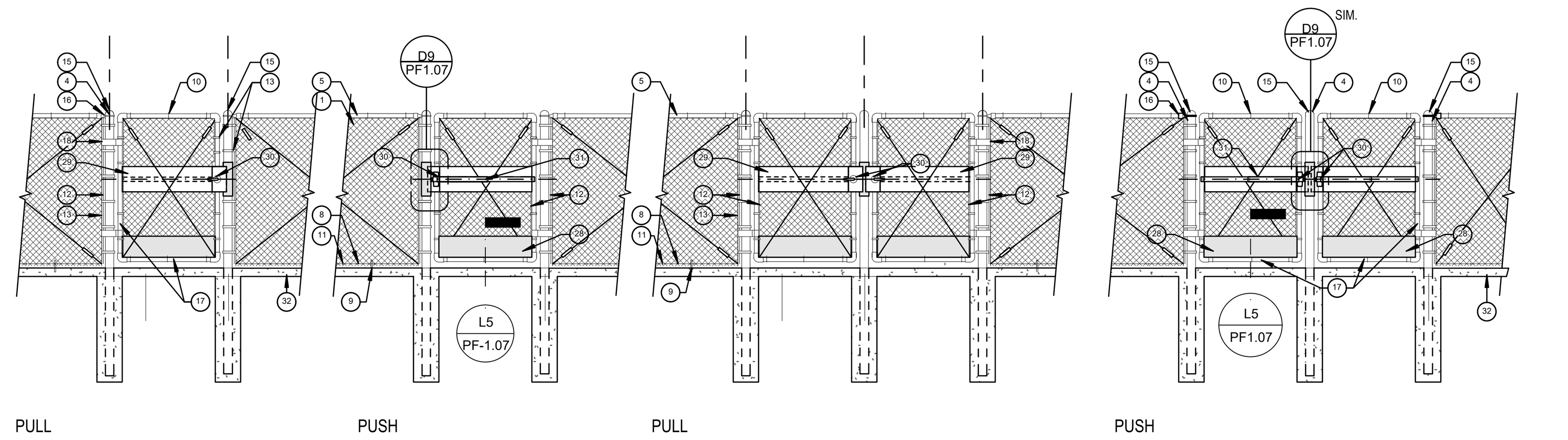

ACCESSIBLE SINGLE LEAF GATE

ACCESSIBLE SINGLE LEAF DOUBLE SWING GATE

LEGEND

1. **FABRIC -** 2" WIRE MESH, 9 GAUGE, KNUCKLED SELVEDGE TOP & BOTTOM
2. ~~**POST -** LINE~~
3. ~~**POST -** TERMINAL/CORNER~~
4. **POST -** GATE
5. **RAILS -** TOP
6. ~~**RAILS -** HORIZONTAL (N/A)~~
7. ~~**RAILS -** BRACES (N/A)~~
8. **TENSION WIRE -** 7 GAUGE, STEEL COLD DRAWN: ASTM A-82
9. **HOOK BOLTS -** 60" ON CENTER
10. **TIE WIRES -** A) TO LINE POSTS AT 16" ON CENTER B) TO TOP RAIL, BRACE RAILS, & BOTTOM TENSION WIRE AT 18" ON CENTER
11. **HOG RINGS -** TO BOTTOM TENSION WIRE AT 18" ON CENTER
12. **TENSION BAR -** 3/16" x 3/4", MILD STEEL
13. **TENSION BANDS -** AT 15" ON CENTER
14. ~~**FITTINGS -** POST CAP, LINE~~
15. **FITTINGS -** POST CAP, TERMINAL
16. **FITTINGS -** TOP RAIL SLEEVES
17. **GATES -** FRAME
18. **GATES -** HARDWARE, HINGES, MALLEABLE IRON, DOUBLE CLAMPING, NON-LIFT-OFF, OFFSET TYPE FOR 180E SWING
19. ~~**GATES -** HARDWARE, DOUBLE LEAF LATCH, CENTER DROP ROD OR PLUNGER BAR; WITH INTEGRAL PADLOCK EYES~~
32. **MOW STRIP -** 20" WIDE BY 5 1/2" DEEP, CENTERED WITH FENCE
33. ~~**TRUSS ROD ASSEMBLY**~~
20. ~~**GATES -** HARDWARE, STOP, FLUSH STEEL PIPE, WITH ANCHORS.~~
21. ~~**GATES -** HARDWARE, LEAF LATCH~~
22. ~~**GATES -** PIPE TRACK & BRACKET~~
23. ~~**GATES -** ROLLER ASSEMBLY~~
24. ~~**GATES -** WHEEL ASSEMBLY~~
25. ~~**GATES -** STEEL ANGLE TRACK~~
26. ~~**GATES -** GUIDE POST~~
27. ~~**GATES -** WHEELSTOP AT END OF STEEL ANGLE IRON RACK~~
28. **GATES -** 10" HIGH, 1/8" THICK STEEL PLATES WELDED ON BOTH SIDES OF THE GATE AT BOTTOM FULL WIDTH OF THE GATE. THE ADA KICK PLATE AND WELDS SHALL BE GALVANIZED FOR CORROSION RESISTANCE.
29. **GATES -** 12" HIGH, CENTER ON LATCH, 1/8" THICK STEEL PLATES WELDED ON THE NON FABRIC SIDE, THE FULL WIDTH OF THE GATE. THE PLATE AND WELDS SHALL BE GALVANIZED FOR CORROSION RESISTANCE.
30. **GATES -** HARDWARE, ALL WALK GATES SHALL HAVE ADA/CBC COMPLIANT ACCESSIBLE HARDWARE WHEN LOCATED WITHIN ACCESSIBLE PATH OF TRAVEL. GATE LATCH SHALL REQUIRE A MAX. OF 5 LBS OF PRESSURE TO OPERATE.
31. **GATES HARDWARE:** (1) EXIT DEVICE CD-AX-98-LDT-BLANK-628-06-AL BY VON DUPRIN ALL HARDWARE FINISH SHALL BE US32D

A14 CHAIN LINK - TYPICAL GATE & DENCE CONDITIONS
NOT TO SCALE 2026

PBK
www.pbk.com
TX FIRM: BR 1608
HOUSTON, TX
713-965-0608

PARLIER HIGH SCHOOL STADIUM REPLACEMENT
603 3rd STREET
PARLIER, CA 93648

DSA SUBMISSION - CONSTRUCTION DOCUMENTS

LICENSED ARCHITECT MICHAEL R. SCHOEN No. C-35165 RENEWAL DATE FEB 28, 2027 STATE OF CALIFORNIA

CLIENT	
PARLIER UNIFIED SCHOOL DISTRICT	
DATE 05/22/2026	PROJECT NUMBER 250093

DRAWING HISTORY

No.	Description	Date
1	ADDENDUM #01	2026-05-22

CHECKED BY: WJM
DRAWN BY: AAS

PLAYING FIELD CONSTRUCTION DETAILS

PF-1.07

Plot Stamp:
6/12/2026 12:21:39 PM

PARLIER UNIFIED SCHOOL DISTRICT
PARLIER HIGH SCHOOL
PARLIER, CALIFORNIA

ENGINEER STAMP

REGISTERED PROFESSIONAL ENGINEER
BRIAN T. DEATS
S 6087
STRUCTURAL
STATE OF CALIFORNIA
S&S
06/17/26
PRINCIPAL

SHEET TITLE	PAGE #	SHEET TITLE	PAGE #
COVER PAGE	B1 OF B43	***VISITOR***	
GENERAL NOTES	B2 OF B43	FOOTING LAYOUT	B28 OF B43
HOME		PIER DETAILS	B29 OF B43
FOOTING LAYOUT	B3 OF B43	PIER DETAILS	B30 OF B43
EXIT FOOTING LAYOUTS	B4 OF B43	UNDERSTRUCTURE LAYOUT	B31 OF B43
PIER DETAILS	B5 OF B43	ELEVATION VIEWS	B32 OF B43
PIER DETAILS	B6 OF B43	SECTION VIEWS	B33 OF B43
UNDERSTRUCTURE LAYOUT	B7 OF B43	SIGHT LINES	B34 OF B43
EXIT UNDERSTRUCTURE LAYOUTS	B8 OF B43	SEATING LAYOUT	B35 OF B43
ELEVATION VIEWS	B9 OF B43	EXITS	B36 OF B43
SECTION VIEWS	B10 OF B43	SEAT BRACKET LAYOUT	B37 OF B43
SECTION VIEWS	B11 OF B43		
SECTION VIEWS	B12 OF B43		
SECTION VIEWS	B13 OF B43		
SIGHT LINES	B14 OF B43		
SIGHT LINES	B15 OF B43		
SEATING LAYOUT	B16 OF B43		
EXIT LAYOUTS	B17 OF B43		
LEFT EXIT VIEWS	B18 OF B43	***DETAILS***	
RIGHT EXIT VIEWS	B19 OF B43	PLANK DETAILS	B38 OF B43
SEAT BRACKET LAYOUT	B20 OF B43	PLANK DETAILS	B39 OF B43
PRESS BOX LAYOUT	B21 OF B43	EXIT DETAILS	B40 OF B43
PRESS BOX FRAMING PLAN	B22 OF B43	EXIT DETAILS	B41 OF B43
PRESS BOX ROOF HATCH DETAILS	B23 OF B43	GRANDSTAND DETAILS	B42 OF B43
PRESS BOX DETAILS	B24 OF B43	GRANDSTAND DETAILS	B43 OF B43
PRESS BOX DETAILS	B24.1 OF B43		
PRESS BOX DETAILS	B25 OF B43		
PRESS BOX CEILING DETAILS	B26 OF B43		
APPENDIX "A" MATERIAL SPECS	B27 OF B43		

OWNER/REPRESENTATIVE/ARCHITECTURAL REVIEW

PLEASE REVIEW THE DRAWINGS FOR COMPLIANCE WITH YOUR ORDER. PLEASE INDICATE ANY CHANGES OR COMMENTS ON THE DRAWINGS.

☐ APPROVED

☐ APPROVED AS NOTED

☐ REVISE AND RE-SUBMIT

SIGNATURE

TITLE

DATE

AWS CWF CERTIFIED WELDING FABRICATOR®

AISC CERTIFIED FABRICATOR

Southern® BLEACHER COMPANY
GRANDSTANDS ▪ BLEACHERS ▪ STADIUMS

PO Box One, Graham, Texas 76450
801 Fifth Street.
Phone: 940/549-0733 Fax: 940/549-1365

Established 1946

GENERAL INFORMATION

	RISE	TREAD	ROWS	LENGTH	SEAT COUNT
HOME	12/14"	26/26"	5/13	331'-6"	3,123
VISITOR	12"	25"	10	174'-0"	995

DATE: 02/09/26
JOB # 26011R2
PARLIER UNIFIED SCHOOL DISTRICT
PARLIER HIGH SCHOOL
PARLIER, CALIFORNIA

REF:

GENERAL REQUIREMENTS:

1. CONFLICTS: NOTES AND DETAILS ON THE DRAWINGS TAKE PRECEDENCE OVER THE GENERAL NOTES AND TYPICAL DETAILS IN CASE OF CONFLICT.

2. CODES: ALL MATERIALS AND WORK SHALL CONFORM TO THE REQUIREMENTS OF THE CALIFORNIA CODE OF REGULATIONS, TITLE 24, PART 2, 2025 CALIFORNIA BUILDING CODE (CBC) & 2023 ICC 300.

3. SIMILAR WORK: WHERE CONSTRUCTION DETAILS ARE NOT SHOWN OR NOTED FOR ANY PART OF THE WORK, SUCH DETAILS SHALL BE THE SAME AS FOR SIMILAR WORK SHOWN ON THE DRAWINGS.

4. EXCAVATIONS: OWNER TO LOCATE AND PROTECT UNDERGROUND OR CONCEALED CONDUIT, PLUMBING OR OTHER UTILITIES WHERE NEW WORK IS BEING PERFORMED.

DESIGN CRITERIA

1. DEAD LOADS:
   BLEACHERS (INCLUDES GIRDERS).......................... 10 PSF
2. LIVE LOADS:
   LIVE LOAD.. 100 PSF (NOT REDUCIBLE)
   SEATS.. 120 PLF
   FOOTBOARDS... 100 PSF
   SWAY (PERPENDICULAR)....................................... 10 PLF
   SWAY (PARALLEL)... 24 PLF
   GUARDRAILS AND HANDRAILS*............................ 50 PLF
   * OR A 200 POUND CONCENTRATED LOAD APPLIED TO RAIL AT ANY POINT IN ANY DIRECTION.

   PRESS BOX:
   DEAD LOADS
   FLOOR.. 15 PSF
   ROOF.. 15 PSF
   LIVE LOADS
   FLOOR/ROOF....................................... 100 PSF

3. LATERAL LOADS:

A) SEISMIC - SHORT PERIOD
   SPECTRAL RESPONSE.. S_S = 0.650 g
   ONE - SECOND PERIOD
   SPECTRAL RESPONSE.. S_1 = 0.220 g
   SITE CLASSIFICATION.. D
   ADJUSTED SPECTRAL RESPONSE......................... S_{MS} = 0.930 g
   ADJUSTED SPECTRAL RESPONSE......................... S_{M1} = 0.590 g
   DESIGN SPECTRAL RESPONSE............................. S_{DS} = 0.620 g (2/3 Sms)
   DESIGN SPECTRAL RESPONSE............................. S_{D1} = 0.393 g (2/3 Sm1)
   RISK CATEGORY: III
   I = 1.25
   SEISMIC DESIGN CATEGORY............................... D

LATERAL SYSTEMS:

BOTH DIRECTIONS: CH. 15 ALL OTHER SELF-SUPPORTING STRUCTURES
R = 1.25
Rho = 1
Cs = 0.620 (1.0E)
V = pCsW = 0.620W (1.0E strength)

A) WIND:
1. ULTIMATE DESIGN WIND SPEED, V_{ult} = 101mph
2. RISK CATEGORY = III
3. WIND EXPOSURE = C
4. APPLICABLE INTERNAL PRESSURE COEFFICIENT (GCpi)=0.55

FOUNDATION:

1. GEOTECHNICAL INVESTIGATION: CERTERRA
   DATED: 01/26/2026
   REPORT DATA: PROJECT NO.: 11-252521-0

2. SOIL PRESSURES:
   SOIL BEARING... 2000 psf
   COEFFICIENT OF FRICTION.................................. 0.35
   PASSIVE PRESSURE.. 350 pcf

3. SOIL REMOVAL AND RECOMPACTION: PER GEOTECHNICAL INVESTIGATION AND THE CONTRACT DOCUMENTS. SOILS WORK SHALL BE OBSERVED AND TESTED BY THE GEOTECHNICAL ENGINEER.

4. GEOTECHNICAL ENGINEER: SHALL OBSERVE FOOTINGS BEFORE PLACEMENT OF REINFORCING OR CONCRETE. FOOTING OBSERVATION AND COMPACTION REPORTS SHALL BE SENT TO THE ARCHITECT AND DSA.

5. SOIL PREPARATION: AS INDICATED IN THE GEOTECHNICAL INVESTIGATION REPORT AND AS SPECIFIED IN THE PROJECT SPECIFICATIONS. COORDINATE WITH GEOTECHNICAL ENGINEERS.

6. MANDATORY MINIMUM FORMWORK (unless fully formed).

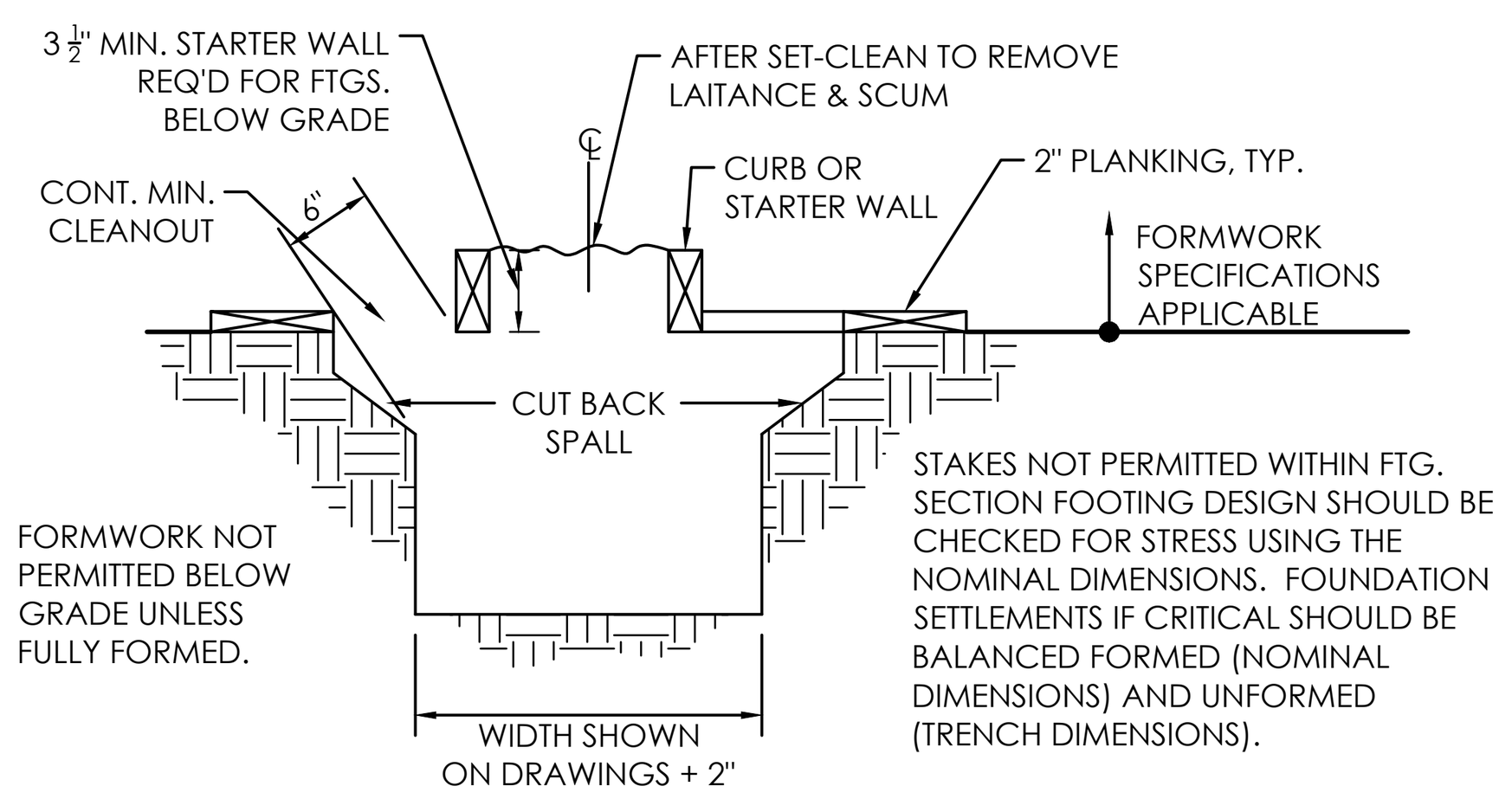

A. STARTER WALL REQUIRED FOR ALL MASONRY OR CONCRETE WALLS.
B. FOUNDATION CONCRETE MAY BE PLACED DIRECTLY INTO NEAT EXCAVATIONS PROVIDED THE FOUNDATION TRENCH WALLS ARE STABLE AS DETERMINED BY THE ARCHITECT (STRUCTURAL ENGINEER) SUBJECT TO THE APPROVAL OF THE DIVISION OF THE STATE ARCHITECT. IN SUCH CASE THE MINIMUM FORMWORK SHOWN ON THE DRAWINGS IS MANDATORY TO INSURE CLEAN EXCAVATIONS IMMEDIATELY PRIOR TO AND DURING THE PLACING OF CONCRETE.

7. FOUNDATIONS GEOTECHNICAL / GRADING REQUIREMENTS:

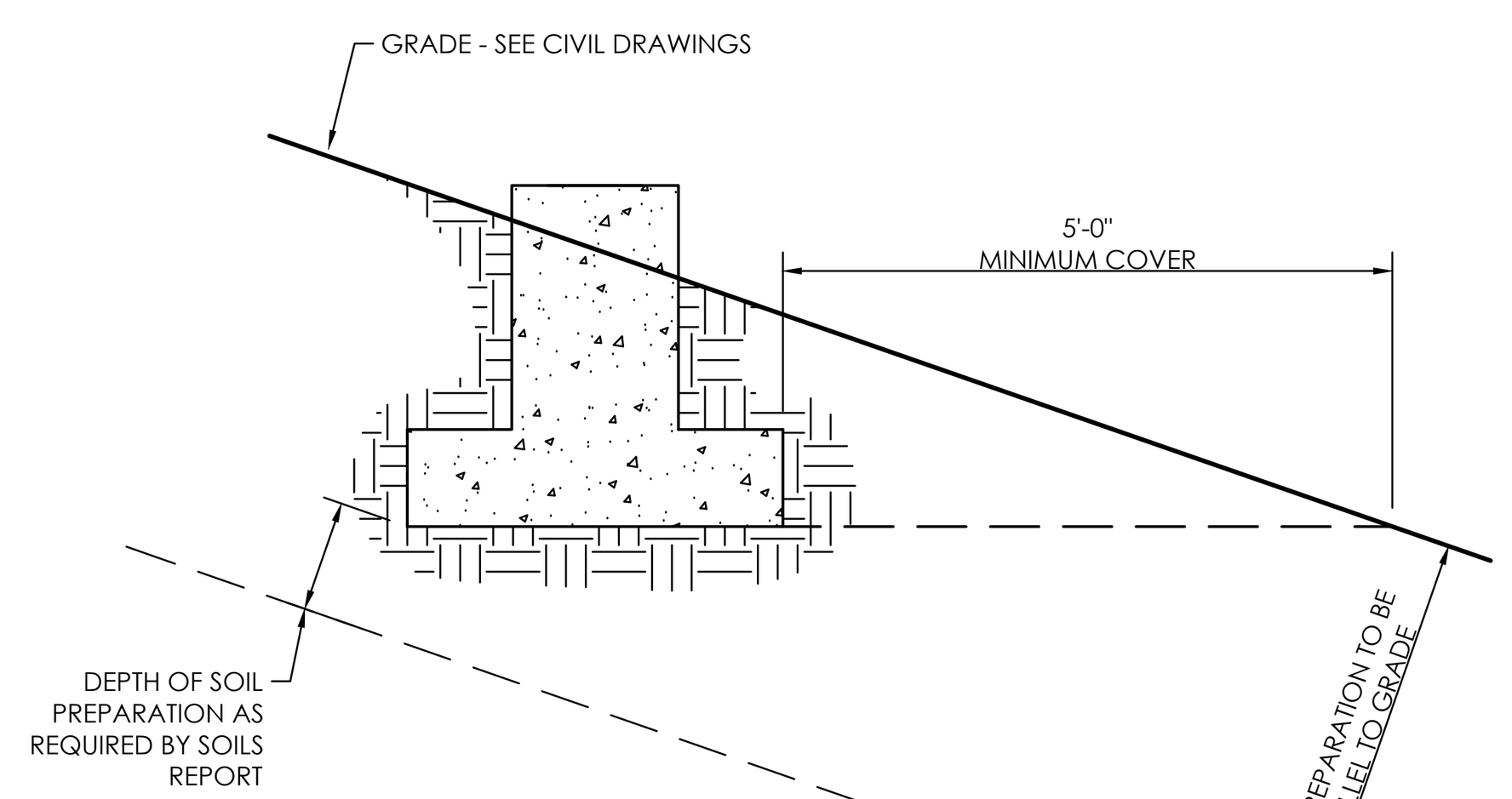

CONCRETE WEDGE ANCHORS:

1. ANCHOR DIAMETER REFERS TO THE THREAD SIZE FOR THE WEDGE ANCHOR.

2. APPLY PROOF TEST LOADS TO WEDGE ANCHORS WITHOUT REMOVING THE NUT IF POSSIBLE. IF NOT, REMOVE NUT & INSTALL A THREADED COUPLER TO THE SAME TIGHTNESS OF THE ORIGINAL NUT USING A TORQUE WRENCH & APPLY LOAD.

3. REACTION LOADS FROM TEST FIXTURES MAY BE APPLIED CLOSE TO THE ANCHOR BEING TESTED, PROVIDED THE ANCHOR IS NOT RESTRAINED FROM WITHDRAWING BY THE FIXTURE(S).

4. TEST EQUIPMENT IS TO BE CALIBRATED BY AN APPROVED TESTING LABORATORY IN ACCORDANCE WITH STANDARD RECOGNIZED PROCEDURES.

5. THE FOLLOWING CRITERIA APPLY FOR THE ACCEPTANCE OF INSTALLED ANCHORS:

   HYDRAULIC RAM METHOD:
   THE ANCHOR SHOULD HAVE NO OBSERVABLE MOVEMENT AT THE APPLICABLE TEST LOAD. FOR WEDGE ANCHORS, A PRACTICAL WAY TO DETERMINE OBSERVABLE MOVEMENT IS THAT THE WASHER UNDER THE NUT BECOMES LOOSE.

   TORQUE WRENCH METHOD:
   WEDGE TYPE:
   THE APPLICABLE TEST TORQUE MUST BE REACHED WITHIN THE FOLLOWING LIMITS:

   ONE-HALF (1/2) TURN OF THE NUT:
   ONE-QUARTER (1/4) TURN OF THE NUT FOR THE 3/8 IN. SLEEVE ANCHOR ONLY.

6. TESTING SHOULD OCCUR 24 HOURS MINIMUM AFTER INSTALLATION OF THE SUBJECT ANCHORS.

7. TESTING VALUES:

SIMPSON STRONG-BOLT 2 SS ICC-ES ESR-3037 FOR NORMAL WEIGHT CONCRETE (3,000 PSI MIN.)				
ANCHOR DIA. (IN.)	MINIMUM EMBEDMENT (NOMINAL)	TENSION TEST LOAD (LBS.)	TORQUE (FT.-LBS.)	MIN. SLAB THICKNESS (IN.)
3/8"	2-7/8"	1,825	30	6"
1/2"	3-7/8"	2,875	65	6"
5/8"	3-5/8"	2,795	80	6"
3/4"	5-3/4"	5,370	150	9"

CONCRETE NOTES:

1. MAXIMUM SIZE AGGREGATE SHALL BE AS FOLLOWS:
   1 1/2"Ø
   AGGREGATE FOR CONCRETE SHALL CONFORM TO ASTM C33.
   GRADING OF AGGREGATE SHALL CONFORM TO TITLE 24, PART 2 CHAPTER 19-A. CBC.

2. MINIMUM COMPRESSIVE STRENGTH OF CONCRETE AT 28 DAYS SHALL BE 3,000 PSI. SLUMP = 5" MAX. W/C RATIO IS 0.50 MAX.

3. ALL REINFORCING SHALL BE ASTM A615 GRADE 40 FOR #3, GRADE 60 FOR #4 AND LARGER. REINF. TO BE WELDED SHALL BE ASTM A706.

4. ALL DIMENSIONS SHOWN FOR LOCATION OF REINFORCING STEEL ARE TO FACE OF BAR AND DENOTE CLEAR COVERAGE. UNLESS SPECIFICALLY NOTED, CONCRETE COVERAGE SHALL BE AS FOLLOWS:
   3" FOR CONCRETE DEPOSITED DIRECTLY AGAINST GROUND (EXCEPT SLABS)
   2" FOR CONCRETE EXPOSED TO GROUND OR WEATHER BUT PLACED IN FORMS.
   PLACE REINF. AT MID-THICKNESS FOR SLABS ON GROUND.

5. CONCRETE SHALL NOT BE DROPPED THROUGH REINF. STEEL (AS IN WALL) SO TO CAUSE SEGREGATION OF AGGREGATES. IN SUCH CASES, HOPPERS AND VERTICAL CHUTES OR TRUNKS SHALL BE USED. CHUTES OR TRUNKS SHALL BE OF VARIABLE LENGTHS SO THAT FREE UNCONFINED FALL OF CONCRETE SHALL NOT EXCEED FIVE (5) FEET AND SUFFICIENT NUMBER SHALL BE USED TO INSURE THE CONCRETE BEING LEVEL AT ALL TIMES.

6. HORIZONTAL CONSTRUCTION JOINTS SHALL HAVE ENTIRE SURFACE REMOVED TO EXPOSED CLEAN AGGREGATE SOLIDLY EMBEDDED.

7. ALL STEEL COLUMN BASE PLATES AND STEEL BEAMS BEARING ON CONCRETE SHALL BEAR UPON 1" DRYPACK AND LEVELING NUTS EXCEPT AS NOTED OTHERWISE.

8. WHERE STEEL MEMBERS BEAR IN CONCRETE, GAPS BETWEEN BASE PLATE AND CONCRETE SHOULD BE DRY-PACKED WITH NON-SHRINK GROUT AFTER STEEL IS IN PLACE. GROUT SHALL BE PER CONCRETE CONTRACTOR AND SHALL BE 5 KSI MINIMUM.

9. PROVIDE MINIMUM LAP SPLICES FOR CONTINUOUS REINFORCEMENT PER THE SCHEDULE PROVIDED BELOW. PROVIDE MINIMUM DEVELOPMENT FOR HOOKED BARS PER THE SCHEDULE BELOW.

TYPICAL LAP SPLICES AND DEVELOPMENT U.N.O. PER PLAN ***3000 psi Conc., 60 ksi Rebar, 2" Clr. Min.***		
Bar Size	**Hook Dev. Length (Ldh)**	**Lap Splice**
#3	6"	17"
#4	8"	23"
#5	10"	28"
#6	12"	34"
#7	14"	49"

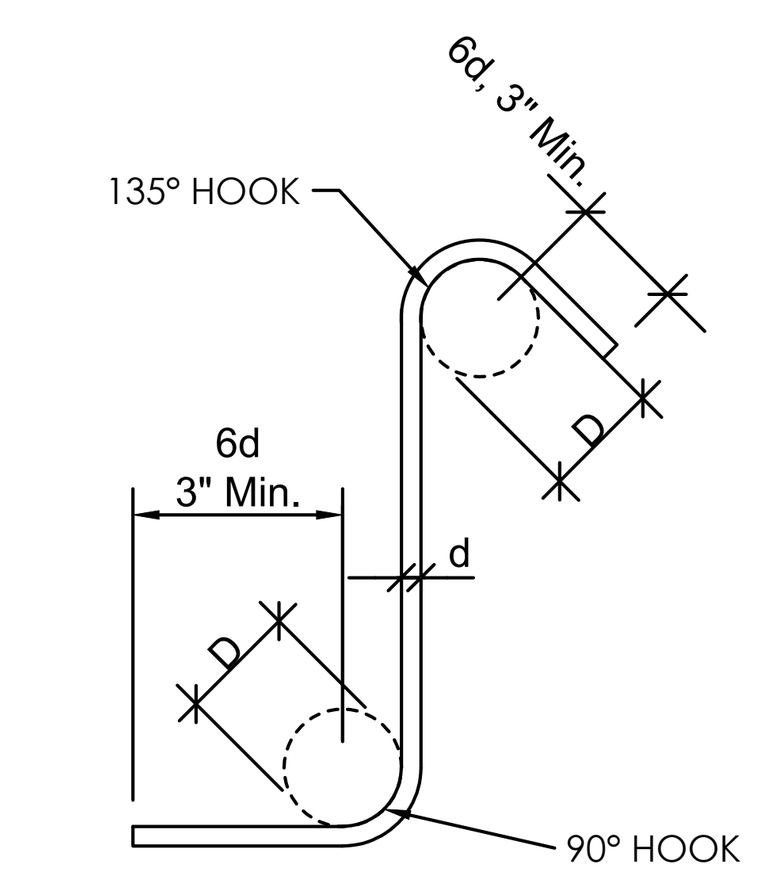

STANDARD TIES & STIRRUPS

Bar Size	D
#3	1 1/2"
#4	2"
#5	2 1/2"

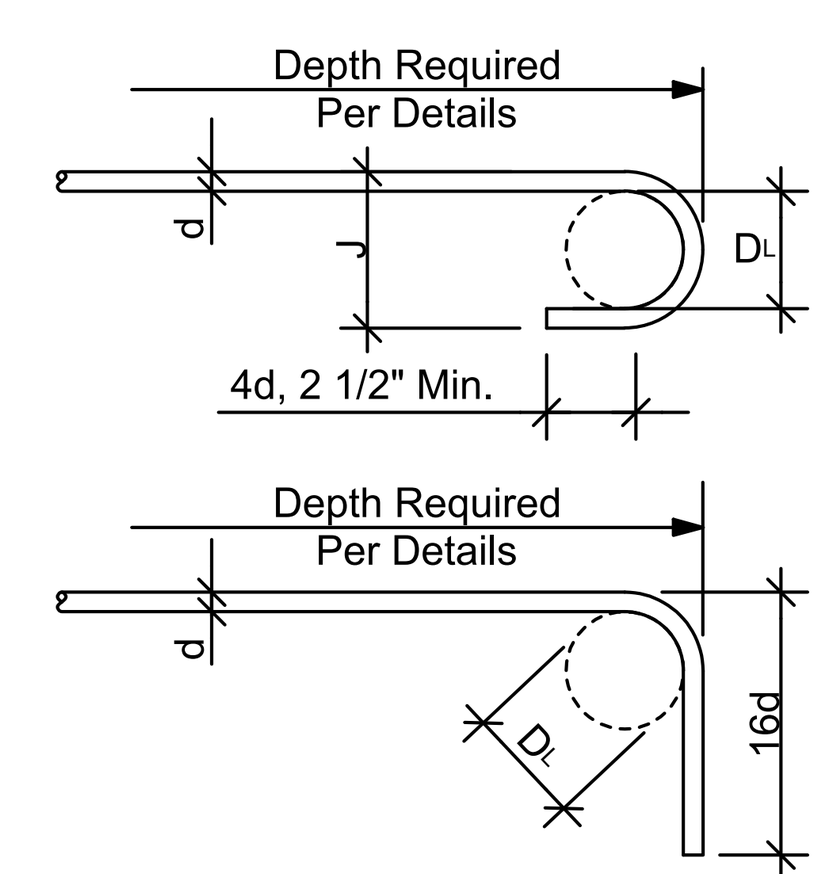

STANDARD END HOOKS

Bar Size	D_L	J
#3	2 1/4"	3"
#4	3"	4"
#5	3 3/4"	5"
#6	4 1/2"	6"
#7	5 1/4"	7"
#8	6"	8"

NOTE: All bar bend diameters and end lengths must conform to the CRSI Manual of Standard Practice.

CONCRETE - EPOXY ANCHORED THREADED RODS:

1. MATERIALS:
   EPOXY .... SIMPSON AT-3G (ICC-ES ESR-5026)
   CONCRETE (MIN)......................... NORMAL WEIGHT CONCRETE (3,000 PSI MIN.)
   THREADED RODS......................... ASTM F1554 Gr. 55 (Fy= 55ksi MIN.) , HDG
   NUTS.. ASTM A563 HEX, GRADE A, HDG

2. INSTALLATION:

A. CARBIDE-TIPPED DRILL BITS ANSI B212.15-1994.

B. HOLES DRILLED WITH HOLLOW BIT, NO CLEANING OR BRUSHING REQUIRED.

C. INSTALLATION AND ALLOWABLE LOADING:

SIMPSON AT-3G ICC-ES ESR-5026 FOR NORMAL WEIGHT CONCRETE (3,000 PSI MIN.)				
ROD DIAM. (IN.)	BIT DIAM. (IN.)	MIN. EMBED. (IN.)	TENSION TEST LOAD (LBS.)	MIN. SLAB THICKNESS (IN.)
3/8"	7/16"	3-1/2"	2,530	6"
1/2"	9/16"	4-1/2"	3,675	6"
5/8"	3/4"	4-1/2"	4,325	6"

3. TENSION LOADS ARE STRENGTH DESIGN LOADS.

4. DO NOT INSTALL IN CONCRETE THAT IS LESS THAN 7 DAYS OLD.

5. MINIMUM MEMBER THICKNESS TO RECEIVE ROD SHALL BE NO LESS THAN 1.5 TIMES THE ANCHOR EMBEDMENT DEPTH.

6. ANCHORS SHALL BE INSTALLED IN HAMMER DRILLED HOLES

STRUCTURAL STEEL:

1. CODES: AISC SPECIFICATION FOR STRUCTURAL STEEL FOR BUILDINGS; MANUAL OF STEEL CONSTRUCTION (16TH EDITION); STRUCTURAL WELDING CODE AWS D1.1 AND AWS D1.4. PIPES SHALL BE IDENTIFIED WITH MILL IDENTIFICATION IN ACCORDANCE WITH ASTM A-53 AND TUBE SHAPES IN ACCORDANCE WITH ASTM A500.

2. IDENTIFICATION: ROLLED STRUCTURAL STEEL SHAPES SHALL BE IDENTIFIED WITH MILL IDENTIFICATION MARKS IN CONFORMANCE WITH ASTM A6.

3. MATERIALS:
   STRUCTURAL SHAPES
   WIDE FLANGE................................. ASTM A992/A572, Fy = Gr. 50 (Fy = 50 ksi Min.), UNO
   CHANNELS AND ANGLES.............. ASTM A529, Fy = Gr. 50 (Fy = 50 ksi Min.), UNO
   SWAYRODS..................................... ASTM A529, Fy = Gr. 50 (Fy = 50 ksi Min.), UNO
   HSS SHAPES (TUBE COLUMNS).......... ASTM A500 GRADE B - 46 KSI
   PLATES 1/2" THICK OR LESS................. ASTM A36 Gr. 36 (Fy = 36 ksi Min.), UNO
   PLATES GREATER THAN 1/2" THICK.... ASTM A572 Gr. 50 (Fy = 50 ksi Min.), UNO
   BOLTS.. ASTM A307 U.N.O. A325N HS, (HOT DIP GALVANIZED)
   NUTS.. HEAVY HEX (HOT DIP GALVANIZED)
   NON-SHRINK GROUT....................... ASTM C1107 5,000 PSI (NON-METALLIC)
   ANCHOR BOLTS.............................. ASTM F1554 Gr. 55 (Fy=55 ksi Min.) (HOT DIP GALVANIZED)

4. WELDING: ALL WELDING SHALL BE IN CONFORMANCE WITH AWS D1.1. WELDS ARE ALL AROUND WITH TYPE ER70S-6 WIRE MIG U.N.O.

5. ALL STEEL SHALL BE HOT DIP GALVANIZED TO CURRENT ASTM A123.

6. ALL FIELD CONNECTIONS ARE NON-SLIP CRITICAL U.N.O. ALL CONNECTIONS ARE DESIGNED TO UTILIZE A307 BOLTS. IT IS ACCEPTABLE TO USE A325N BOLTS IN LIEU OF THE A307 BOLTS WITHOUT NEEDING THE TESTS AND SPECIAL INSPECTIONS FOR HIGH STRENGTH BOLTS. THE INSTALLATION OF THESE BOLTS ARE TO BE TIGHTENED A SNUG TIGHT CONDITION AS SPECIFIED BY AISC. BOLT HOLES IN STANDARD CONNECTIONS SHALL BE STANDARD WITH 1/16" OVER SIZING FROM BOLT DIAMETER AND 1/8" OVERSIZED FOR ANCHORAGE LOCATIONS.

7. SWAYROD THREADS SHALL BE PINGED WITH A HAMMER TO ELIMINATE REMOVAL OF NUT, AFTER FINAL TIGHTENING.

COLD FORMED MEMBERS (PRESS BOX):

MATERIALS:

STEEL PROPERTIES			
TUBE	4" SQUARE X 11 GA. TUBE	A500 GRADE B	Fy = 46ksi, MIN.
DIAGONAL ANGLE	L2 X 2 X 3/16"	A572 / A529	Fy = 50ksi, MIN.
BELLY PAN ANGLE & WALL FRAMING	L2 X 2 X 1/8"	A572 / A529	Fy = 50ksi, MIN.
CEES	4 X 2 1/2 X 14 GA.	A1011 / A653	Fy = 55ksi, MIN.
FLAT STRAP	4" X 14 GA.	A1011 / A653	Fy = 55ksi, MIN.
ROOF PLATE	11GA. OR 1/8"	A1011 / A653 / A786	Fy = 27ksi, MIN.

1. CODES AND FABRICATION: STEEL STUD MANUFACTURER'S ASSOCIATION ICC ESR 3064P OR APPROVED EQUAL.

2. COLD FORMED SHAPES SHALL BE LIMITED TO A THICKNESS OF 11 GAGE OR THINNER.

ALUMINUM:

1. MATERIALS: ALUMINUM
   SHAPES..ALLOY 6061-T6 OR 6005A-T61 (Fy = 35 KSI)
   PLANKING / RAIL / PICKET PANEL.......ALLOY 6063-T6 (Fy = 25 KSI)

2. DISSIMILAR MATERIALS: WHERE ALUMINUM SURFACES ARE IN CONTACT WITH STEEL, THE STEEL SHALL BE GALVANIZED.

3. MILL FINISHED ALUMINUM WILL BECOME DISCOLORED DUE TO OXIDATION WHICH IS A NATURAL PHENOMENON & SHOULD BE EXPECTED.

4. ANODIZED ALUMINUM HANDRAIL IS 1.66" O.D. PIPE SIZE.

5. ALUMINUM TO CONFORM TO 2020 ALUMINUM DESIGN MANUAL.

6. WELDING: ALL WELDING SHALL BE IN CONFORMANCE WITH AWS A5.10. WELDS ARE ALL AROUND WITH TYPE 5356 FILLER METAL. U.N.O.

SPECIAL INSPECTION/INSPECTOR REQUIREMENTS REQUIREMENTS FOR SPECIAL INSPECTION:

1. PROJECT INSPECTOR: IN ACCORDANCE WITH TITLE 24, PART I, SECTIONS 4-333 AND 4-342.

2. CERTIFIED SPECIAL INSPECTOR: EMPLOYED BY THE DISTRICT AND APPROVED BY THE ARCHITECT, STRUCTURAL ENGINEER AND DSA.

3. REPORTS: PREPARED BY THE SPECIAL INSPECTOR AND SIGNED BY A CIVIL ENGINEER. SUBMITTED TO THE DSA, THE ARCHITECT, AND ENGINEER. ALL DISCREPANCIES SHALL BE BROUGHT TO THE IMMEDIATE ATTENTION OF THE CONTRACTOR FOR CORRECTION; THEN, IF NOT CORRECTED, TO THE ARCHITECT, ENGINEER AND THE DSA (CBC 1704A.2.4).

4. THE SPECIAL INSPECTION IS TO BE CONTINUOUS DURING THE PERFORMANCE OF THE WORK UNLESS OTHERWISE SPECIFIED.

SUMMARY OF STRUCTURAL CONTINUOUS AND PERIODIC SPECIAL INSPECTION:

1. RESPONSIBILITY: IT IS THE RESPONSIBILITY OF THE PROJECT INSPECTOR TO INFORM THE SPECIAL INSPECTOR OR INSPECTION AGENCY AT LEAST ONE WORKING DAY PRIOR TO PERFORMING ANY WORK THAT REQUIRES SPECIAL INSPECTION.

2. SPECIAL INSPECTIONS:
   A) CONCRETE (CBC 1705A.3): DURING THE TAKING OF TEST SPECIMENS AND PLACING OF REINFORCED CONCRETE.

   B) BOLTS INSTALLED IN CONCRETE (CBC 1705A.3): PRIOR TO AND DURING THE PLACEMENT OF CONCRETE AROUND BOLTS.

   C) REINFORCING STEEL (CBC 1705A.3): DURING PLACING OF REINFORCING STEEL FOR ALL CONCRETE SPECIFIED TO HAVE SPECIAL INSPECTION.

   D) STRUCTURAL WELDING AND FABRICATION (CBC 1705A.2, 1705A.2.5 & 1704A.2.5):
      1. DURING ALL SHOP AND FIELD WELDING IN ACCORDANCE WITH AWS D1.1 DURING SHOP FABRICATION.
      2. WELDING INSPECTORS ARE TO BE AWS QC-1 CERTIFIED.
      3. INSPECTION SHALL BE PER AWS D1.1, D1.3 OR D1.4 AND INCLUDE VERIFICATION THAT THE WPS IS BEING FOLLOWED.
      4. ALL STEEL AND WELDING MATERIALS SHALL BE IDENTIFIED AS REQUIRED BY THEIR ASTM OR AWS STANDARD.
      5. ALL SUBMITTED TO THE OWNER BY THEIR WELDING INSPECTOR, NOT THE BLEACHER FABRICATOR.

   E) CONCRETE ANCHORS: FOR ALL THREADED ROD AND REINFORCING STEEL ANCHORED WITH EPOXY ADHESIVE IN CONCRETE; FOR ALL EXPANSION ANCHORS IN CONCRETE. INSPECTION / TESTING SHALL BE IN CONFORMANCE WITH THE ANCHOR MANUFACTURER'S EVALUATION REPORT AND SHALL INCLUDE AS A MINIMUM VERIFICATION OF HOLE DEPTH AND DIAMETER, CLEAN OUT, ALL MATERIALS, INSTALLATION TORQUE AND PROOF LOAD TESTS.

   F) YEARLY INSPECTION: AFTER THE INSTALLATION, THE OWNER SHALL CONDUCT ANNUAL INSPECTIONS AS REQUIRED BY ICC/ANSI 300, SECTION 105.2. THE OWNER WILL ALSO MAINTAIN COPIES OF ALL ANNUAL INSPECTIONS REPORTS AND MAKE THEM AVAILABLE ON SITE FOR DSA REVIEW, UPON REQUEST.

THIS DRAWING AND ALL INFORMATION THEREIN IS THE PROPERTY OF THE SOUTHERN BLEACHER COMPANY, TAYLOR & SYFAN AND IS CONFIDENTIAL AND MUST NOT BE MADE PUBLIC OR COPIED. THIS DRAWING IS LOANED SUBJECT TO RE-TURN UPON DEMAND AND, IS NOT TO BE USED DIRECTLY OR INDIRECTLY IN ANY WAY DETRIMENTAL TO OUR INTERESTS.

TAYLOR & SYFAN
STRUCTURAL ENGINEERS
CENTRAL COAST OFFICE Ph: (626) 793-7438 Fax: (626) 793-7439 Toll: (800) 579-3881
553 S. Oak Knoll Ave. Pasadena, CA 91101
http://www.tsstructural.com/

Southern® BLEACHER COMPANY
GRANDSTANDS ▪BLEACHERS ▪STADIUMS
PO Box One, Graham, Texas 76450
801 Fifth Street.
Phone: 940/549-0733 Fax: 940/549-1365
Established 1946

REGISTERED PROFESSIONAL ENGINEER BRIAN T. DEAN S 6087 STRUCTURAL STATE OF CALIFORNIA
S&S 06/17/26
PRINCIPAL

TYPE: GENERAL NOTES

TITLE: PARLIER UNIFIED SCHOOL DISTRICT
PARLIER HIGH SCHOOL
PARLIER, CALIFORNIA

REV	BY	DATE	DESCRIPTION

DATE: 02/09/26 DRAWN: JOA CHECKED: DMC
JOB NUMBER: #26011R2
SHEET: B2 OF: B43

22" X 34" (11x17 = 1/2 indicated scale)

26011R2

A = GRID LETTERS
1 = GRID LINE
E1 = EXIT PAD 2/B5

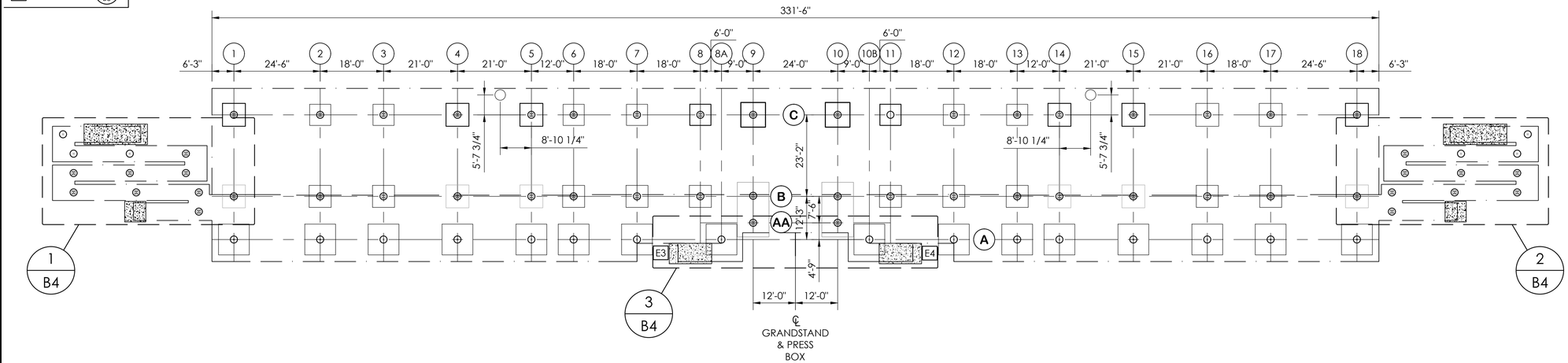

1 B3 FOOTING LAYOUT
SCALE:1/16"=1'-0"

FOUNDATION NOTES

1. GENERAL CONTRACTOR SHALL VERIFY ALL DIMENSIONS PRIOR TO START OF CONSTRUCTION.
2. REINFORCING STEEL SHALL BE ASTM A615 GRADE 60.
3. CONCRETE SHALL HAVE A MINIMUM COMPRESSIVE STRENGTH OF 3000 PSI AT 28 DAYS.
4. MAXIMUM HORIZ. TOLERANCE OF ANCHOR BOLT PLACEMENT SHALL BE ±1/8".
5. ALL ANCHOR BOLTS SHALL HAVE A 3 1/2" PROJECTION (±1/8") ABOVE THE TOP OF PIER ELEVATION, UNLESS SPECIFICALLY NOTED OTHERWISE.
6. THE CONCRETE FOUNDATION CONTRACTOR IS RESPONSIBLE FOR NON SHRINK GROUTING.
7. THE ELEVATION AT THE TOP OF THE CONCRETE PIER IS DESIGNED TO BE 1" BELOW THE BOTTOM OF STEEL ELEVATION. THE TOLERANCE FOR THE BOTTOM OF STEEL ELEVATION IS ±1/8". THE TOP OF CONCRETE ELEVATION MAY BE RAISED TO MATCH THE BOTTOM OF STEEL ELEVATION, AT THE CONCRETE CONTRACTORS DISCRETION. THE CONTRACTOR OF THE CONCRETE FOUNDATIONS IS RESPONSIBLE FOR ANY ADJUSTMENTS REQUIRED.
8. ALL UNDERGROUND UTILITIES ARE TO BE LOCATED AND MARKED DURING THE REVIEW PROCESS BY THE OWNERS REPRESENTATIVE PRIOR TO FOUNDATION EXCAVATION.
9. REMOVE/RELOCATE THE UNDERGROUND UTILITIES AS REQUIRED WHERE UNDERGROUND UTILITIES CONFLICT WITH THE NEW FOOTINGS.

THIS DRAWING AND ALL INFORMATION THEREIN IS THE PROPERTY OF THE SOUTHERN BLEACHER COMPANY, TAYLOR & SYFAN AND IS CONFIDENTIAL AND MUST NOT BE MADE PUBLIC OR COPIED. THIS DRAWING IS LOANED SUBJECT TO RE-TURN UPON DEMAND AND, IS NOT TO BE USED DIRECTLY OR INDIRECTLY IN ANY WAY DETRIMENTAL TO OUR INTERESTS.

STRUCTURAL ENGINEERS
CENTRAL OFFICE Ph: (626) 793-7438 Fax: (626) 793-7439 Toll: (800) 379-3881
553 S. Oak Knoll Ave. Pasadena, CA 91101
http://www.structural.com/
TAYLOR & SYFAN
Southern® BLEACHER COMPANY
GRANDSTANDS •BLEACHERS •STADIUMS
PO Box One, Graham, Texas 76450
801 Fifth Street.
Phone: 940/549-0733 Fax: 940/549-1365
Established 1946

REGISTERED PROFESSIONAL ENGINEER BRIAN T. DEAN S 6087 STRUCTURAL STATE OF CALIFORNIA
S&S 06/17/26
PRINCIPAL

TYPE: FOOTING LAYOUT
12/14" RISE X 26/26" TREAD / 331'-6" (5/13 ROWS)

TITLE: PARLIER UNIFIED SCHOOL DISTRICT
PARLIER HIGH SCHOOL
PARLIER, CALIFORNIA

REV	BY	DATE	DESCRIPTION

DATE	DRAWN	CHECKED
02/09/26	JOA	DMC

JOB NUMBER #26011R2

SHEET B3 OF B43

22" X 34" (11x17 = 1/2 indicated scale)

26011R2

A = GRID LETTERS
1 = GRID LINE
E1 = EXIT PAD 2/B5
R1 = PIER NUMBER

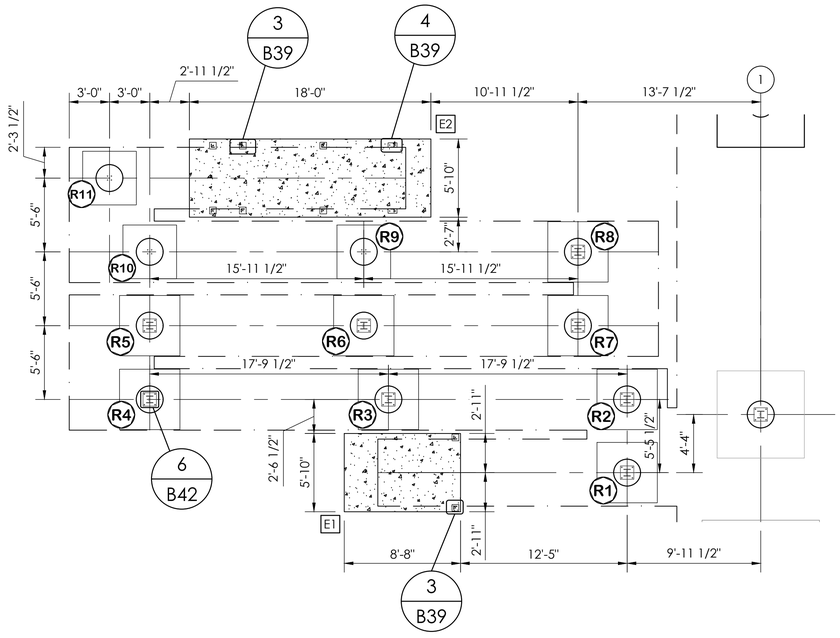

1 / B4 LEFT EXIT FOOTING LAYOUT
SCALE:3/16"=1'-0"

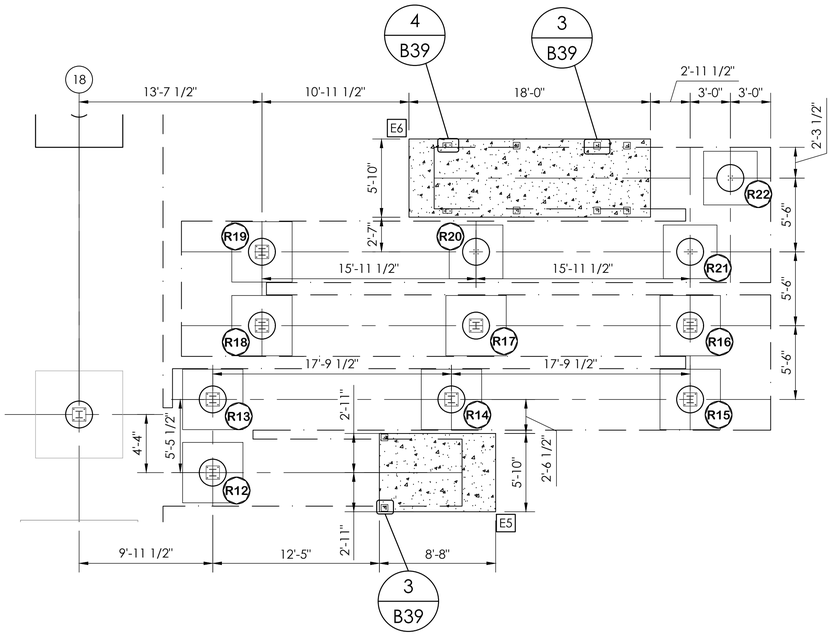

2 / B4 RIGHT EXIT FOOTING LAYOUT
SCALE:3/16"=1'-0"

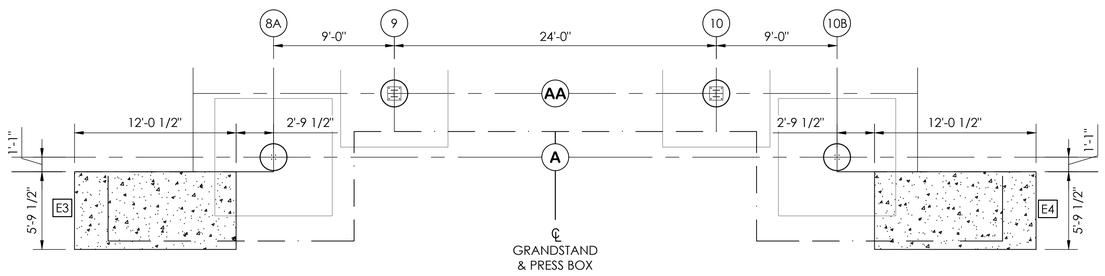

3 / B4 FRONT EXIT FOOTING LAYOUT
SCALE:3/16"=1'-0"

THIS DRAWING AND ALL INFORMATION THEREIN IS THE PROPERTY OF THE SOUTHERN BLEACHER COMPANY, TAYLOR & SYFAN AND IS CONFIDENTIAL AND MUST NOT BE MADE PUBLIC OR COPIED. THIS DRAWING IS LOANED SUBJECT TO RE-TURN UPON DEMAND AND, IS NOT TO BE USED DIRECTLY OR INDIRECTLY IN ANY WAY DETRIMENTAL TO OUR INTERESTS.

STRUCTURAL ENGINEERS
CENTRAL COAST OFFICE
Ph: (626) 793-7438
Fax: (626) 793-7439
Toll: (800) 379-3881
553 S. Oak Knoll Ave. Pasadena, CA 91101
http://www.structural.com/
TAYLOR & SYFAN
Southern® BLEACHER COMPANY
GRANDSTANDS • BLEACHERS • STADIUMS
PO Box One, Graham, Texas 76450
801 Fifth Street.
Phone: 940/549-0733 Fax: 940/549-1365
Established 1946

REGISTERED PROFESSIONAL ENGINEER
BRIAN T. DEAN
S 6087
STRUCTURAL
STATE OF CALIFORNIA
S&S 06/17/26
PRINCIPAL

TYPE: EXIT FOOTING LAYOUTS
12/14" RISE X 26/26" TREAD / 331'-6" (5/13 ROWS)

TITLE: PARLIER UNIFIED SCHOOL DISTRICT
PARLIER HIGH SCHOOL
PARLIER, CALIFORNIA

REV	BY	DATE	DESCRIPTION

DATE	DRAWN	CHECKED
02/09/26	JOA	DMC

JOB NUMBER #26011R2

SHEET B4 OF B43

22" X 34" (11x17 = 1/2 indicated scale)

26011R2

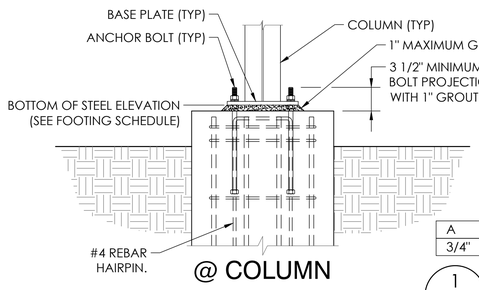

@ COLUMN

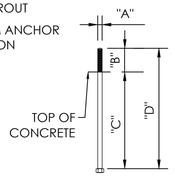

A	B	C	D	TYPE
3/4"	3.5"	14.5"	18"	F1554 Gr. 55

1 / B5 TOP OF PIER DETAIL
NOT TO SCALE

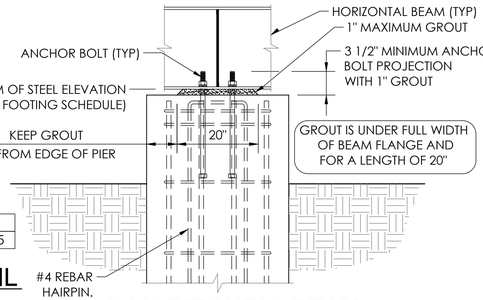

@ HORIZONTAL BEAM

EXIT PAD CONCRETE ELEVATION SCHEDULE

(P = CONCRETE PAD)	TOP OF CONCRETE ELEV.
P1	100.00'
P2	100.00'
P3	100.00'
P4	100.00'
P5	100.00'
P6	100.00'

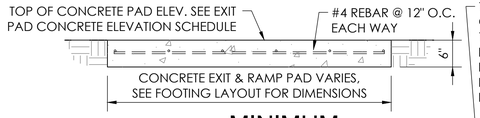

THE ENDS OF THE CIRCULAR TIE SHALL OVERLAP BY NOT LESS THAN 6" AND TERMINATE WITH STANDARD HOOKS THAT ENGAGE A VERTICAL BAR. OVERLAPS AT ENDS OF ADJACENT CIRCULAR TIES SHALL BE STAGGERED AROUND THE PERIMETER ENCLOSING THE LONGITUDINAL BARS, TYP.

2 / B5 MINIMUM EXIT PAD DETAIL
NOT TO SCALE

FOOTING SCHEDULE

NOTE: WHEN PEDESTAL HEIGHT IS 16" OR LESS, PEDESTALS SHALL BE POURED MONOLITHICALLY WITH PAD FOOTING

FOOTING # (A = GRIDLINE) (R = RAMP PIER)	TOP OF PIER ELEV.	BOTTOM OF STEEL ELEV.	GROUT	"H"	"D"	"H2"	"W"	FOOTING REINFORCEMENT	PIER DIAMETER	ANCHOR BOLTS
A	102.69'	102.77'	1"	14"	19"	38" MAX.	8'-9" X 8'-9"	(9) #6 EACH WAY BOTTOM & #5 @ 18" O.C. TOP	24"Ø	(4)3/4"Ø X 18" HEADED ANCHOR BOLTS
AA & B G.L. 9 & 10	100.42'	100.50'	1"	14"	19"	26" MAX.	9'-0" X 15'-6"	#6 EACH WAY @ 12" O.C. TOP & BOTTOM	24"Ø	(4)3/4"Ø X 18" HEADED ANCHOR BOLTS
B G.L. 1,4,5,14,15 & 18	100.42'	100.50'	1"	14"	19"	26" MAX.	6'-6" X 6'-6"	(7) #6 EACH WAY BOTTOM	24"Ø	(4)3/4"Ø X 18" HEADED ANCHOR BOLTS
B G.L. 2,3,6-8,11-13,16 & 17	100.42'	100.50'	1"	14"	19"	26" MAX.	6'-3" X 6'-3"	(6) #6 EACH WAY BOTTOM	24"Ø	(4)3/4"Ø X 18" HEADED ANCHOR BOLTS
C G.L. 1,4,5,8,11,14,15 & 18	100.42'	100.50'	1"	14"	19"	26" MAX.	6'-6" X 6'-6"	(7) #6 EACH WAY BOTTOM	24"Ø	(4)3/4"Ø X 18" HEADED ANCHOR BOLTS
C G.L. 2,3,6,7,12,13,16 & 17	100.42'	100.50'	1"	14"	19"	26" MAX.	6'-0" X 6'-0"	(6) #6 EACH WAY BOTTOM	24"Ø	(4)3/4"Ø X 18" HEADED ANCHOR BOLTS
C G.L. 9 & 10	100.42'	100.50'	1"	14"	19"	26" MAX.	7'-0" X 7'-0"	(7) #6 EACH WAY BOTTOM	24"Ø	(4)3/4"Ø X 18" HEADED ANCHOR BOLTS
R9 & R20	101.87'	101.95'	1"	14"	19"	50" MAX.	4'-0" X 4'-0"	(4) #6 EACH WAY BOTTOM	24"Ø	(4)3/4"Ø X 18" HEADED ANCHOR BOLTS
R10-R11 & R21-R22	100.62'	100.70'	1"	14"	19"	50" MAX.	4'-0" X 4'-0"	(4) #6 EACH WAY BOTTOM	24"Ø	(4)3/4"Ø X 18" HEADED ANCHOR BOLTS
R1 - R8 & R12 - R19	100.42'	100.50'	1"	14"	19"	26" MAX.	4'-6" X 4'-6"	(5) #6 EACH WAY BOTTOM	24"Ø	(4)3/4"Ø X 18" HEADED ANCHOR BOLTS

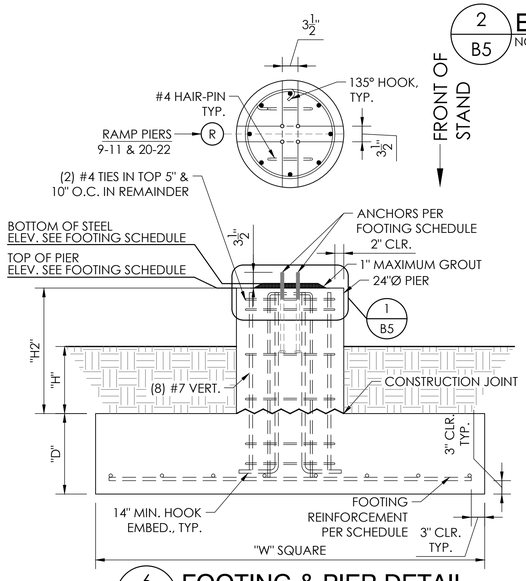

6 / B5 FOOTING & PIER DETAIL
NOT TO SCALE

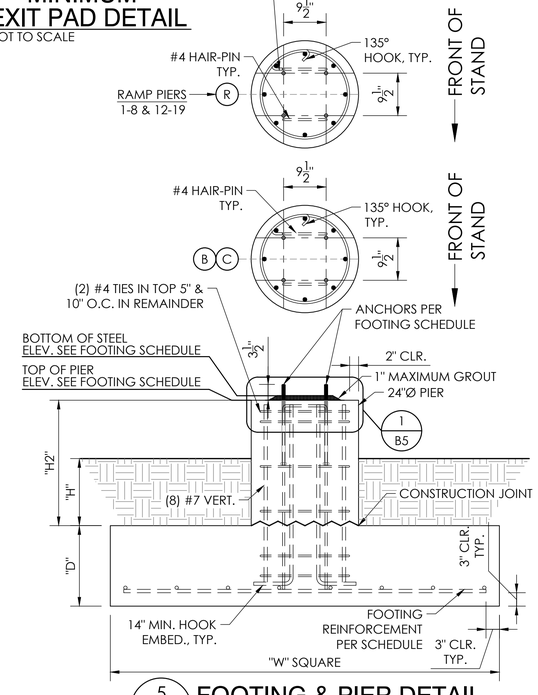

5 / B5 FOOTING & PIER DETAIL
NOT TO SCALE

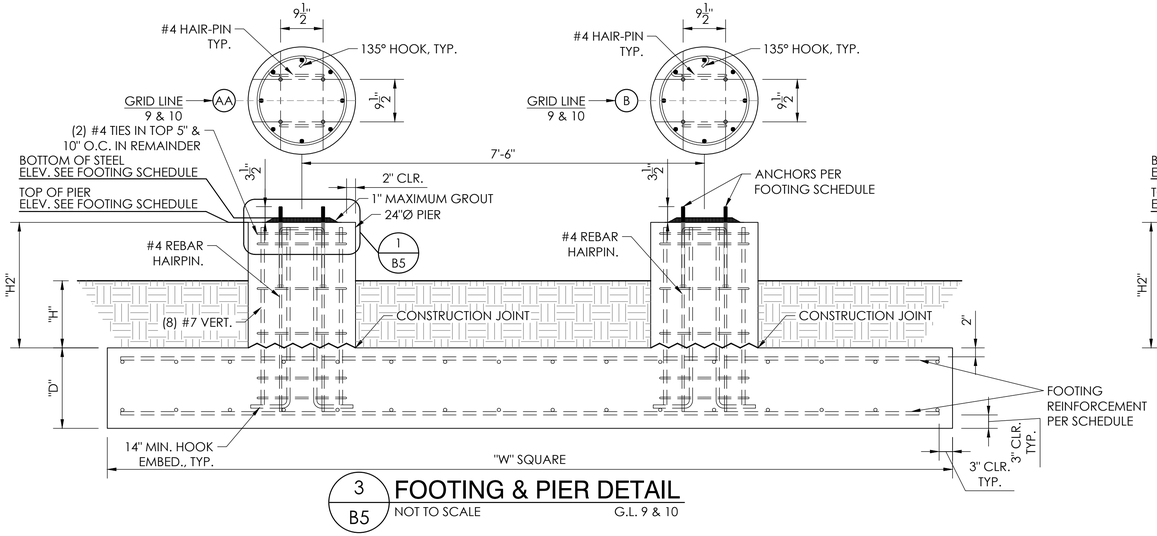

3 / B5 FOOTING & PIER DETAIL
NOT TO SCALE G.L. 9 & 10

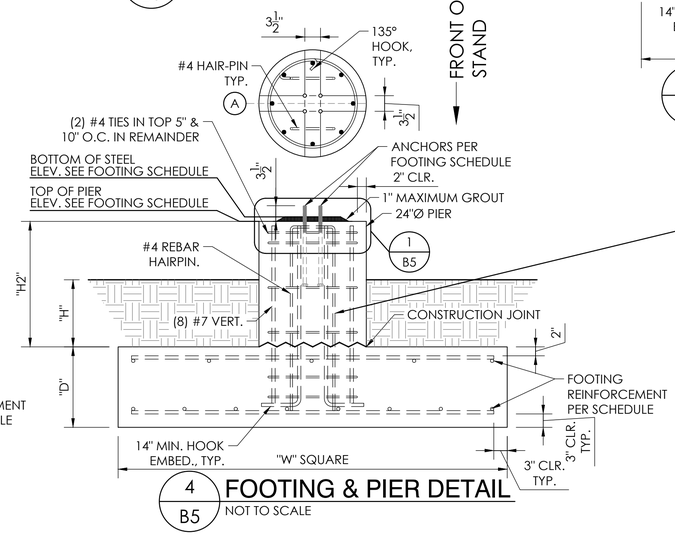

4 / B5 FOOTING & PIER DETAIL
NOT TO SCALE

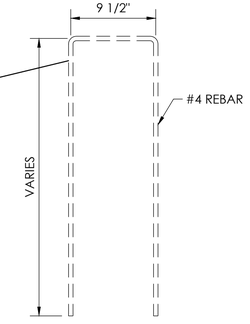

HAIR-PIN DETAIL

THIS DRAWING AND ALL INFORMATION THEREIN IS THE PROPERTY OF THE SOUTHERN BLEACHER COMPANY, MOBILEHAVEN CORPORATION, AND MAY NOT BE MADE PUBLIC OR COPIED. THIS DRAWING IS LOANED SUBJECT TO RETURN UPON DEMAND AND, IS NOT TO BE USED DIRECTLY OR INDIRECTLY IN ANY WAY DETRIMENTAL TO OUR INTERESTS.

STRUCTURAL ENGINEERS
CORPORATE OFFICE
553 S. Oak Knoll Ave., Pasadena, CA 91101
Ph: (626) 793-7438
Fax: (626) 793-3881
http://www.taylorandyoffa.com/

TAYLOR & YOFFA

Southern® BLEACHER COMPANY
GRANDSTANDS • BLEACHERS • STADIUMS
Established 1946

PO Box One, Graham, Texas 76450
801 Fifth Street
Phone: 940-549-0733 Fax: 940-549-1368

REGISTERED PROFESSIONAL ENGINEER
BRIAN T. DEAN
S 6087
STRUCTURAL
STATE OF CALIFORNIA
S&S 06/17/26
PRINCIPAL

TITLE: PIER DETAILS
12/14" RISE X 26/26" TREAD / 331'-6" (5/13 ROWS)

PARLIER UNIFIED SCHOOL DISTRICT
PARLIER HIGH SCHOOL
PARLIER, CALIFORNIA

REV	BY	DATE	DESCRIPTION

DATE	DRAWN	CHECKED
02/09/26	JOA	DMC

JOB NUMBER #26011R2

SHEET B5 OF B43

22" X 34" (11x17 = 1/2 indicated scale)

26011R2

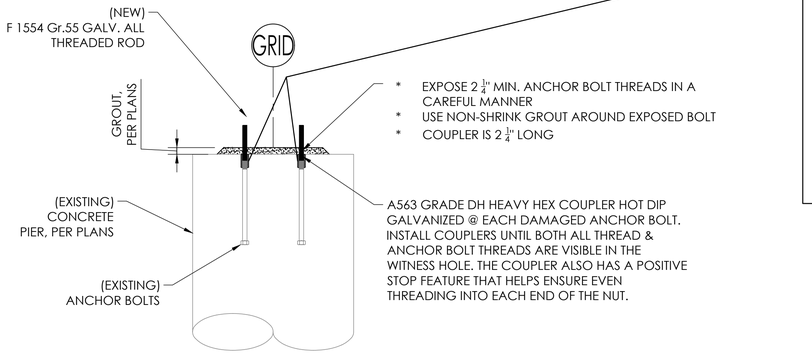

1 / B6 DETAIL @ DAMAGED F1554 Gr. 55 BOLTS
NOT TO SCALE

DETAIL TO BE USED IF REQUIRED WITH SEOR APPROVAL OF EACH USE

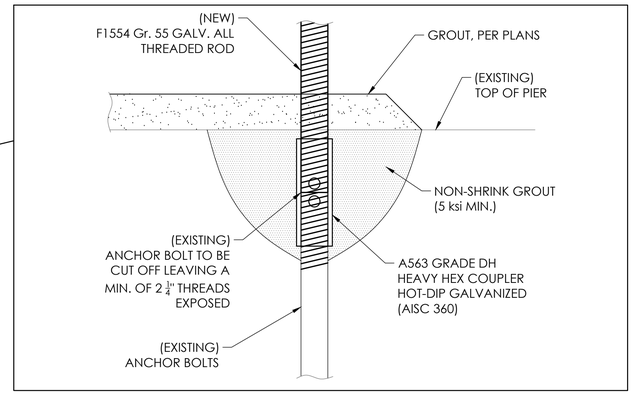

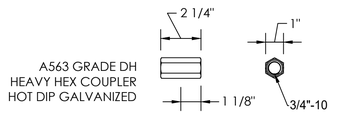

3 / B6 3/4" COUPLER
SCALE:3"=1'-0"

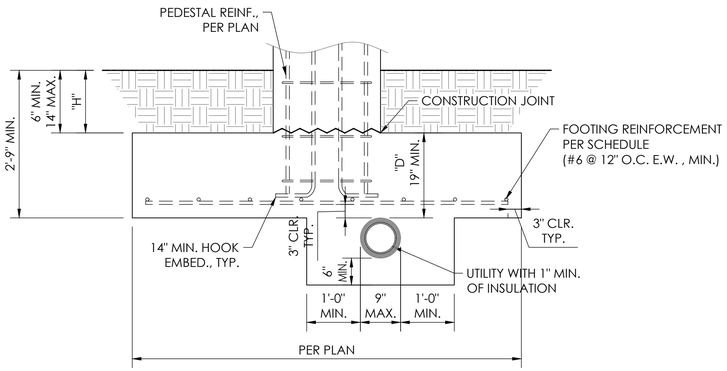

2 / B6 FOOTING DETAIL @ UTILITY
NOT TO SCALE

DETAIL TO BE USED IF REQUIRED

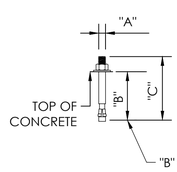

A	B	C
3/8"	2-7/8"	5"
1/2"	3-7/8"	7"

3/8"Ø SIMPSON STRONG-BOLT 2 SS WEDGE ANCHOR (MIN. EMBEDMENT = 2-7/8")

1/2"Ø SIMPSON STRONG-BOLT 2 SS WEDGE ANCHOR (MIN. EMBEDMENT = 3-7/8")

4 / B6 WEDGE ANCHOR DETAIL
NOT TO SCALE

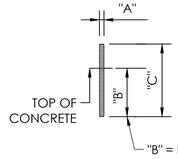

A	B	C
1/2"	4-1/2"	8"
5/8"	4-1/2"	8"

1/2"Ø X 8" HDG ALL THREADED ROD w/ SIMPSON AT-3G
ICC-ES ESR-5026 & 1" MAX. GROUT
(MIN. EMBEDMENT = 4-1/2")

5/8"Ø X 8" HDG ALL THREADED ROD w/ SIMPSON AT-3G
ICC-ES ESR-5026 & 1" MAX. GROUT
(MIN. EMBEDMENT = 4 1/2")

THREADED ROD WITH EPOXY MAY BE USED IN LIEU OF SIMPSON STRONG-BOLT 2 SS ANCHOR

5 / B6 THREADED ROD DETAIL
NOT TO SCALE

THIS DRAWING AND ALL INFORMATION THEREIN IS THE PROPERTY OF THE SOUTHERN BLEACHER COMPANY, MCD & SYKAN AND IS CONFIDENTIAL AND NOT TO BE MADE PUBLIC OR COPIED. THIS DRAWING IS LOANED SUBJECT TO RE-TURN UPON DEMAND AND, IS NOT TO BE USED DIRECTLY OR INDIRECTLY IN ANY WAY DETRIMENTAL TO OUR INTERESTS.

STRUCTURAL ENGINEERS
TAYLOR & YEHAN
CORPORATION
553 S. Glendora Ave., Suite 4 Phs: (626) 252-7458
West Covina, CA 91790 Fax: (626) 252-7488
http://www.tcmsurdal.com/
Southern BLEACHER COMPANY
GRANDSTANDS • BLEACHERS • STADIUMS
PO Box One, Graham, Texas 76450
801 Fifth Street Phone: 940/549-0733 Fax: 940/549-1368
Established 1946

REGISTERED PROFESSIONAL ENGINEER
BRIAN T. DEAN
S 6087
STRUCTURAL
STATE OF CALIFORNIA
S&S 06/17/26
PRINCIPAL

TYPE: PIER DETAILS 12/14" RISE X 26/26" TREAD / 331'-6" (5/13 ROWS)
TITLE: PARLIER UNIFIED SCHOOL DISTRICT PARLIER HIGH SCHOOL PARLIER, CALIFORNIA

REV	BY	DATE	DESCRIPTION

DATE	DRAWN	CHECKED
02/09/26	JOA	DMC

JOB NUMBER #26011R2

SHEET B6 OF B43

22" X 34" (1:1x17 = 1/2 indicated scale)

26011R2

A = GRID LINE
1 = STRINGER NUMBERS
B1 = BEAM NUMBERS
⊣⊢ = BOLTED SPLICE LOCATION

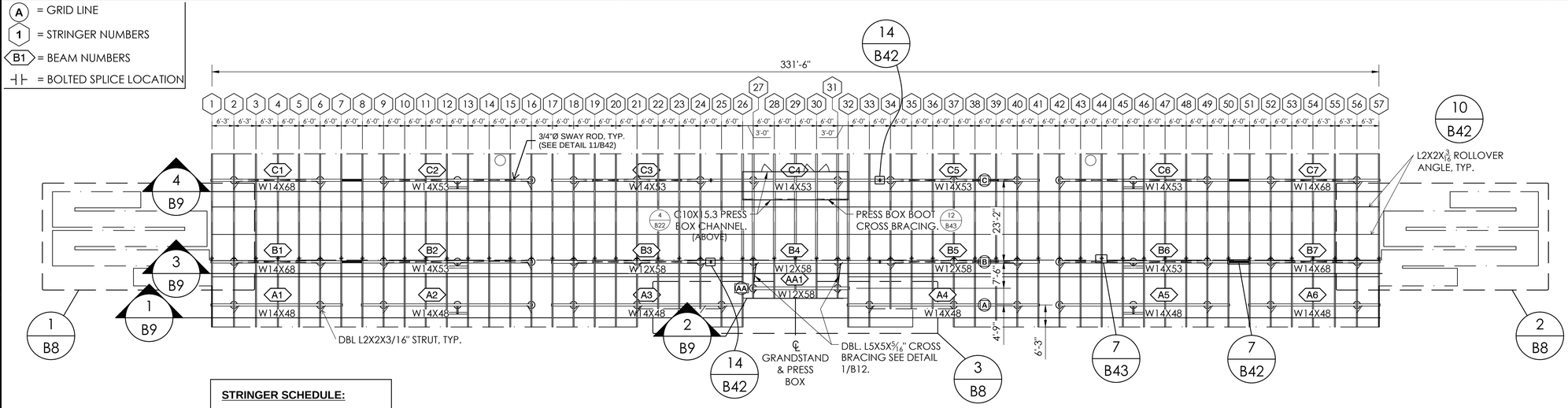

STRINGER SCHEDULE:

Stringers 1-23 & 35-57

Lower Stringer = W12x19
Upper Stringer = W12x22

Stringers 24-31

Lower Stringer = W12x19
Upper Stringer = W12x30

1/B7 UNDERSTRUCTURE LAYOUT

SCALE:1/16"=1'-0"

THIS DRAWING AND ALL INFORMATION THEREIN IS THE PROPERTY OF THE SOUTHERN BLEACHER COMPANY, MCD & SYHAN AND IS CONFIDENTIAL AND MUST NOT BE MADE PUBLIC OR COPIED. THIS DRAWING IS LOANED SUBJECT TO RE-TURN UPON DEMAND, AND, IS NOT TO BE USED DIRECTLY OR INDIRECTLY IN ANY WAY DETRIMENTAL TO OUR INTERESTS.

STRUCTURAL ENGINEERS
TAYLOR & SYFAN
CONTACT: Phn: (626) 793-7438
FOR PROJECT: Fax: (626) 793-3881
553 S. Oak Knoll Ave. Pasadena, CA 91101
http://www.tsmanuals.com/

Southern®
BLEACHER COMPANY
GRANDSTANDS •BLEACHERS •STADIUMS
PO Box One, Graham, Texas 76450
801 Fifth Street Phone: 940/549-0733 Fax: 940/549-1368
Established 1946

REGISTERED PROFESSIONAL ENGINEER
BRIAN T. DEATHERAGE
S 6087
STRUCTURAL
STATE OF CALIFORNIA
S&S
06/17/26
PRINCIPAL

TYPE: UNDERSTRUCTURE LAYOUT
12/14" RISE X 26/26" TREAD / 331'-6" (5/13 ROWS)

TITLE: PARLIER UNIFIED SCHOOL DISTRICT
PARLIER HIGH SCHOOL
PARLIER, CALIFORNIA

REV	BY	DATE	DESCRIPTION

DATE	DRAWN	CHECKED
02/09/26	JOA	DMC

JOB NUMBER #26011R2

SHEET B7 OF B43

22" X 34" (1:1x17 = 1/2 indicated scale)

26011R2

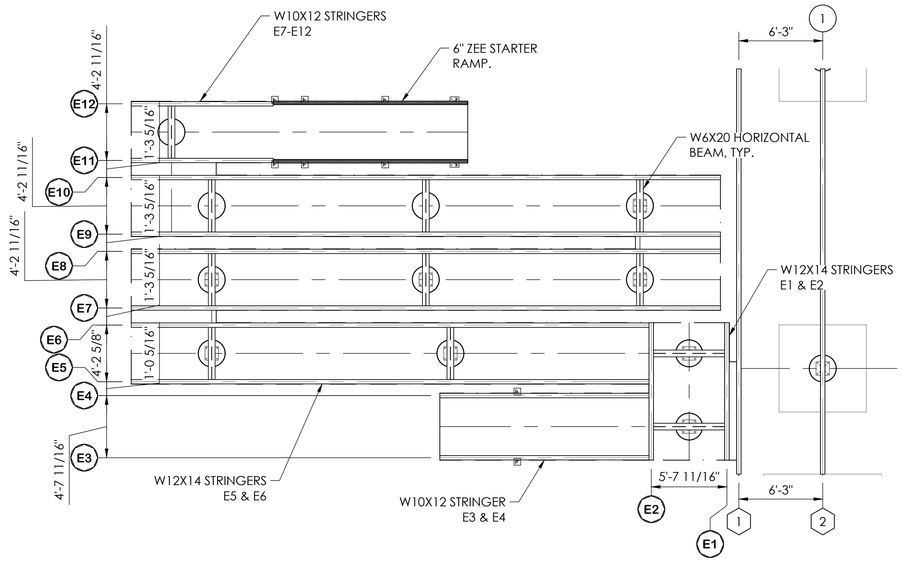

1 / B8 LEFT EXIT UNDERSTRUCTURE LAYOUT
SCALE:3/16"=1'-0"

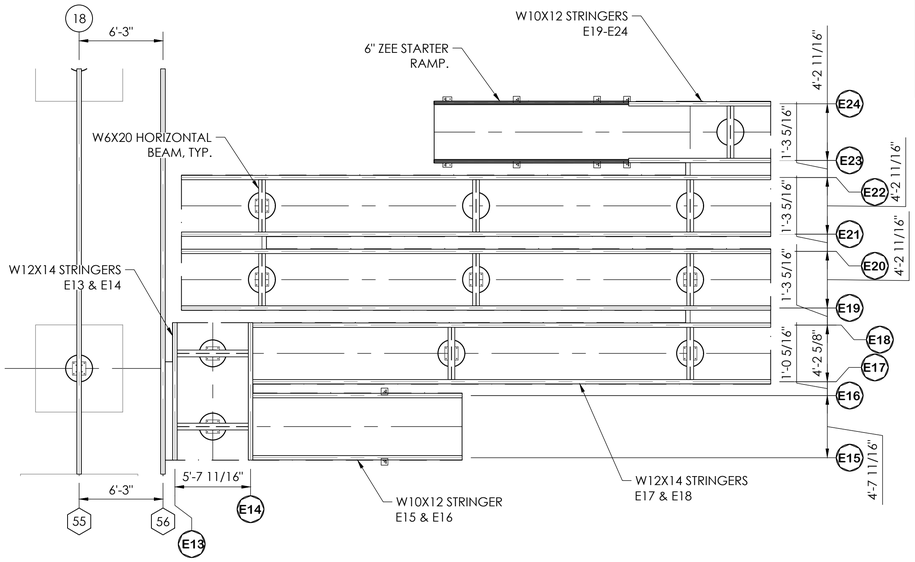

2 / B8 RIGHT EXIT UNDERSTRUCTURE LAYOUT
SCALE:3/16"=1'-0"

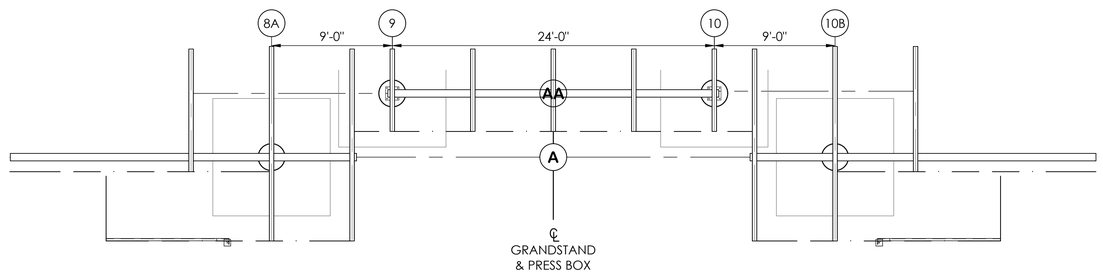

3 / B8 FRONT EXIT UNDERSTRUCTURE LAYOUT
SCALE:3/16"=1'-0"

A = GRID LETTERS
1 = GRID LINE
E1 = EXIT STRINGER NUMBERS
1 = STRINGER NUMBERS

THIS DRAWING AND ALL INFORMATION THEREIN IS THE PROPERTY OF THE SOUTHERN BLEACHER COMPANY. TAYLOR & SYFAN AND IS CONFIDENTIAL AND MUST NOT BE MADE PUBLIC OR COPIED. THIS DRAWING IS LOANED SUBJECT TO RE-TURN UPON DEMAND AND, IS NOT TO BE USED DIRECTLY OR INDIRECTLY IN ANY WAY DETRIMENTAL TO OUR INTERESTS.

STRUCTURAL ENGINEERS
CENTRAL COAST OFFICE
Ph: (626) 793-7438
Fax: (626) 793-7439
Toll: (800) 579-3881
553 S. Oak Knoll Ave. Pasadena, CA 91101
http://www.structural.com/
TAYLOR & SYFAN
Southern® BLEACHER COMPANY
GRANDSTANDS • BLEACHERS • STADIUMS
PO Box One, Graham, Texas 76450
801 Fifth Street.
Phone: 940/549-0733 Fax: 940/549-1365
Established 1946

REGISTERED PROFESSIONAL ENGINEER
BRIAN T. DEAN
S 6087
STRUCTURAL
STATE OF CALIFORNIA
S&S
06/17/26
PRINCIPAL

TYPE: EXIT UNDERSTRUCTURE LAYOUTS
12/14" RISE X 26/26" TREAD / 331'-6" (5/13 ROWS)

TITLE: PARLIER UNIFIED SCHOOL DISTRICT
PARLIER HIGH SCHOOL
PARLIER, CALIFORNIA

REV	BY	DATE	DESCRIPTION

DATE	DRAWN	CHECKED
02/09/26	JOA	DMC

JOB NUMBER #26011R2

SHEET B8 OF B43

22" X 34" (11x17 = 1/2 indicated scale)

26011R2

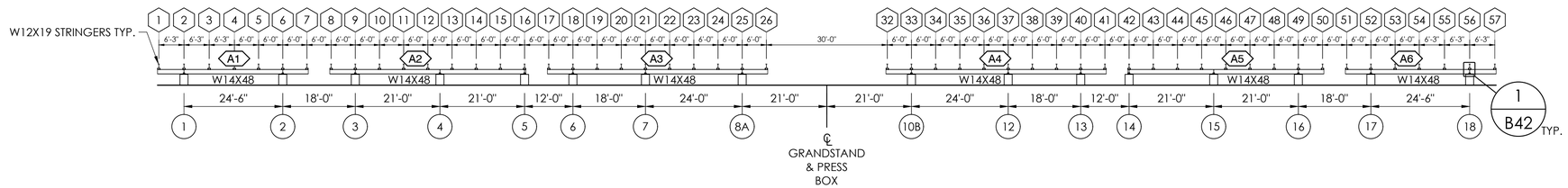

1 B9 "A" ROW ELEVATION VIEW
SCALE:1/16"=1'-0"

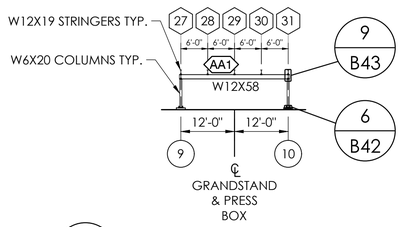

2 B9 "AA" ROW ELEVATION VIEW
SCALE:1/16"=1'-0"

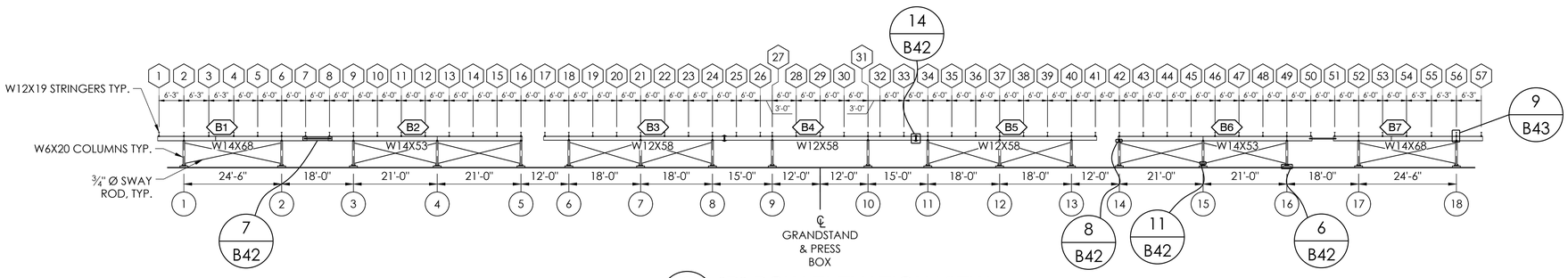

3 B9 "B" ROW ELEVATION VIEW
SCALE:1/16"=1'-0"

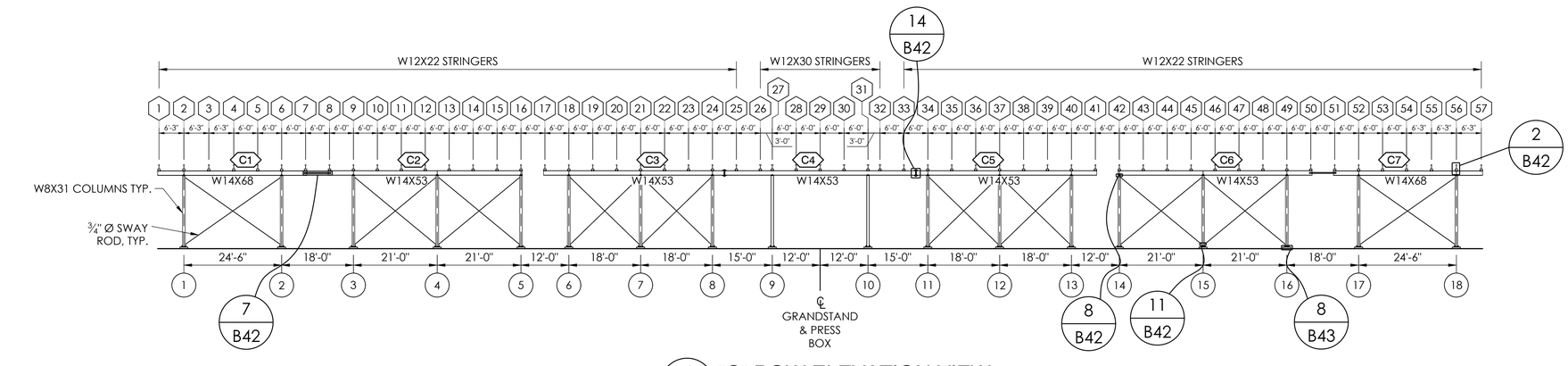

4 B9 "C" ROW ELEVATION VIEW
SCALE:1/16"=1'-0"

THIS DRAWING AND ALL INFORMATION THEREIN IS THE PROPERTY OF THE SOUTHERN BLEACHER COMPANY, STATE OF ILLINOIS AND IS CONFIDENTIAL AND MUST NOT BE MADE PUBLIC OR COPIED. THIS DRAWING IS LOANED SUBJECT TO RE-TURN UPON DEMAND AND, IS NOT TO BE USED DIRECTLY OR INDIRECTLY IN ANY WAY DETRIMENTAL TO OUR INTERESTS.

STRUCTURAL ENGINEERS
CENTRAL OFFICE
Ph: (626) 793-7438
Fax: (626) 793-7439
Toll: (800) 379-3881
553 S. Oak Knoll Ave. Pasadena, CA 91101
http://www.structural.com/
TAYLOR & SYFAN
Southern® BLEACHER COMPANY
GRANDSTANDS • BLEACHERS • STADIUMS
PO Box One, Graham, Texas 76450
801 Fifth Street
Phone: 940/549-0733 Fax: 940/549-1365
Established 1946

REGISTERED PROFESSIONAL ENGINEER
BRIAN T. DEAN
S 6087
STRUCTURAL
STATE OF CALIFORNIA
S&S 06/17/26
PRINCIPAL

TYPE: ELEVATION VIEW
12/14" RISE X 26/26" TREAD / 331'-6" (5/13 ROWS)

TITLE: PARLIER UNIFIED SCHOOL DISTRICT
PARLIER HIGH SCHOOL
PARLIER, CALIFORNIA

REV	BY	DATE	DESCRIPTION

DATE	DRAWN	CHECKED
02/09/26	JOA	DMC

JOB NUMBER #26011R2

SHEET B9 OF B43

22" X 34" (11x17 = 1/2 indicated scale)

26011R2

ITEM DESCRIPTION

1. W 12 X 58 (50 ksi)
2. W 14 X 48 (50 ksi)
3. W 14 X 53 (50 ksi)
4. W 14 X 68 (50 ksi)
5. W 12 X 19 (50 ksi)
6. W 12 X 22 (50 ksi)
7. W 12 X 30 (50 ksi)
8. W 10 X 12 (50 ksi)
9. W 10 X 15 (50 ksi)
10. W 8 X 31 (50 ksi)
11. W 6 X 20 (50 ksi)
12. L 3 X 3 X 1/4 (50 ksi)
13. L 2 X 2 X 3/16 (50 ksi)
14. L 2 1/2 X 2 1/2 X 3/16 (50 ksi)
15. L 1 1/2 X 1 1/2 X 3/16 (50 ksi)
16. 12 X 12 X 5/8 PLATE
17. 6 X 8 X 3/8 PLATE
18. 3/4 X REQ'D LENGTH SWAY ROD (50 ksi)
19. 3/4 X 18 ANCHOR BOLT W/2 HEX HEAD NUTS & FLAT WASHER
20. 1" MESH BLACK VINYL COATED CHAIN-LINK FENCE.
21. ANODIZED ALUMINUM RAIL (SEE GENERAL NOTES)
22. 3 X 3/8 GUSSET PLATE (A36)
23. 5 X 3/8 GUSSET PLATE (A36)
24. 2 X 1/4 GUSSET PLATE (A36)
25. 14 X 14 X 5/8 PLATE
26. 2" MESH BLACK VINYL COATED CHAIN-LINK FENCE.

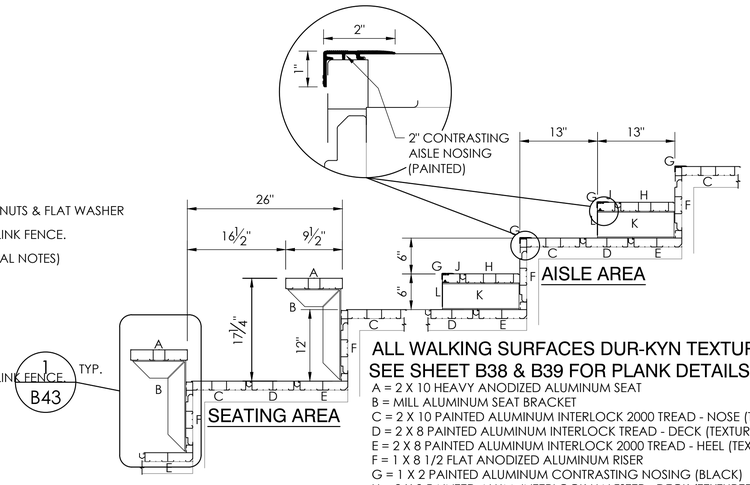

ALL WALKING SURFACES DUR-KYN TEXTURED GRAY
SEE SHEET B38 & B39 FOR PLANK DETAILS

A = 2 X 10 HEAVY ANODIZED ALUMINUM SEAT
B = MILL ALUMINUM SEAT BRACKET
C = 2 X 10 PAINTED ALUMINUM INTERLOCK 2000 TREAD - NOSE (TEXTURED GRAY)
D = 2 X 8 PAINTED ALUMINUM INTERLOCK TREAD - DECK (TEXTURED GRAY)
E = 2 X 8 PAINTED ALUMINUM INTERLOCK 2000 TREAD - HEEL (TEXTURED GRAY)
F = 1 X 8 1/2 FLAT ANODIZED ALUMINUM RISER
G = 1 X 2 PAINTED ALUMINUM CONTRASTING NOSING (BLACK)
H = 2 X 9 PAINTED ALUM. INTERLOCK HALFSTEP - DECK (TEXTURED GRAY)
J = 2 X 4 PAINTED ALUM. INTERLOCK HALFSTEP - NOSE W/RISER (TEXTURED GRAY)
K = 4 1/2" MILL ALUMINUM HALFSTEP BRACKET
L = 4 1/2" ANODIZED ALUMINUM INTERLOCK STEP RISER

2 B10 **PLANK ARRANGEMENT**
NOT TO SCALE 12" X 26"

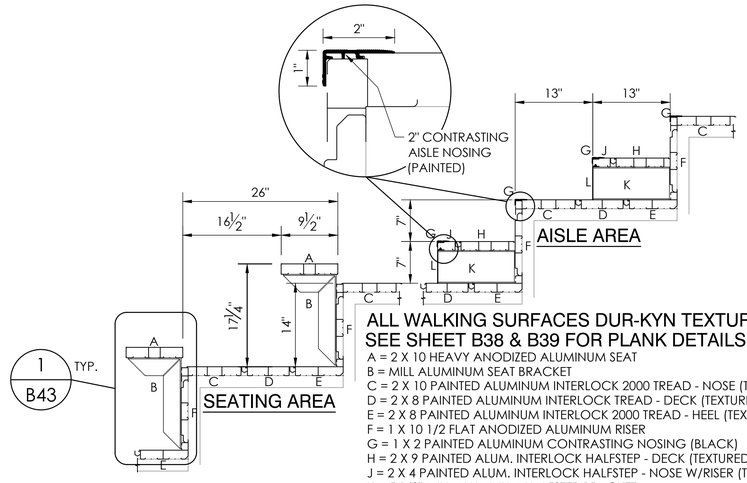

ALL WALKING SURFACES DUR-KYN TEXTURED GRAY
SEE SHEET B38 & B39 FOR PLANK DETAILS

A = 2 X 10 HEAVY ANODIZED ALUMINUM SEAT
B = MILL ALUMINUM SEAT BRACKET
C = 2 X 10 PAINTED ALUMINUM INTERLOCK 2000 TREAD - NOSE (TEXTURED GRAY)
D = 2 X 8 PAINTED ALUMINUM INTERLOCK TREAD - DECK (TEXTURED GRAY)
E = 2 X 8 PAINTED ALUMINUM INTERLOCK 2000 TREAD - HEEL (TEXTURED GRAY)
F = 1 X 10 1/2 FLAT ANODIZED ALUMINUM RISER
G = 1 X 2 PAINTED ALUMINUM CONTRASTING NOSING (BLACK)
H = 2 X 9 PAINTED ALUM. INTERLOCK HALFSTEP - DECK (TEXTURED GRAY)
J = 2 X 4 PAINTED ALUM. INTERLOCK HALFSTEP - NOSE W/RISER (TEXTURED GRAY)
K = 5 1/2" MILL ALUMINUM HALFSTEP BRACKET
L = 5 1/2" ANODIZED ALUMINUM INTERLOCK STEP RISER

3 B10 **PLANK ARRANGEMENT**
NOT TO SCALE 14" X 26"

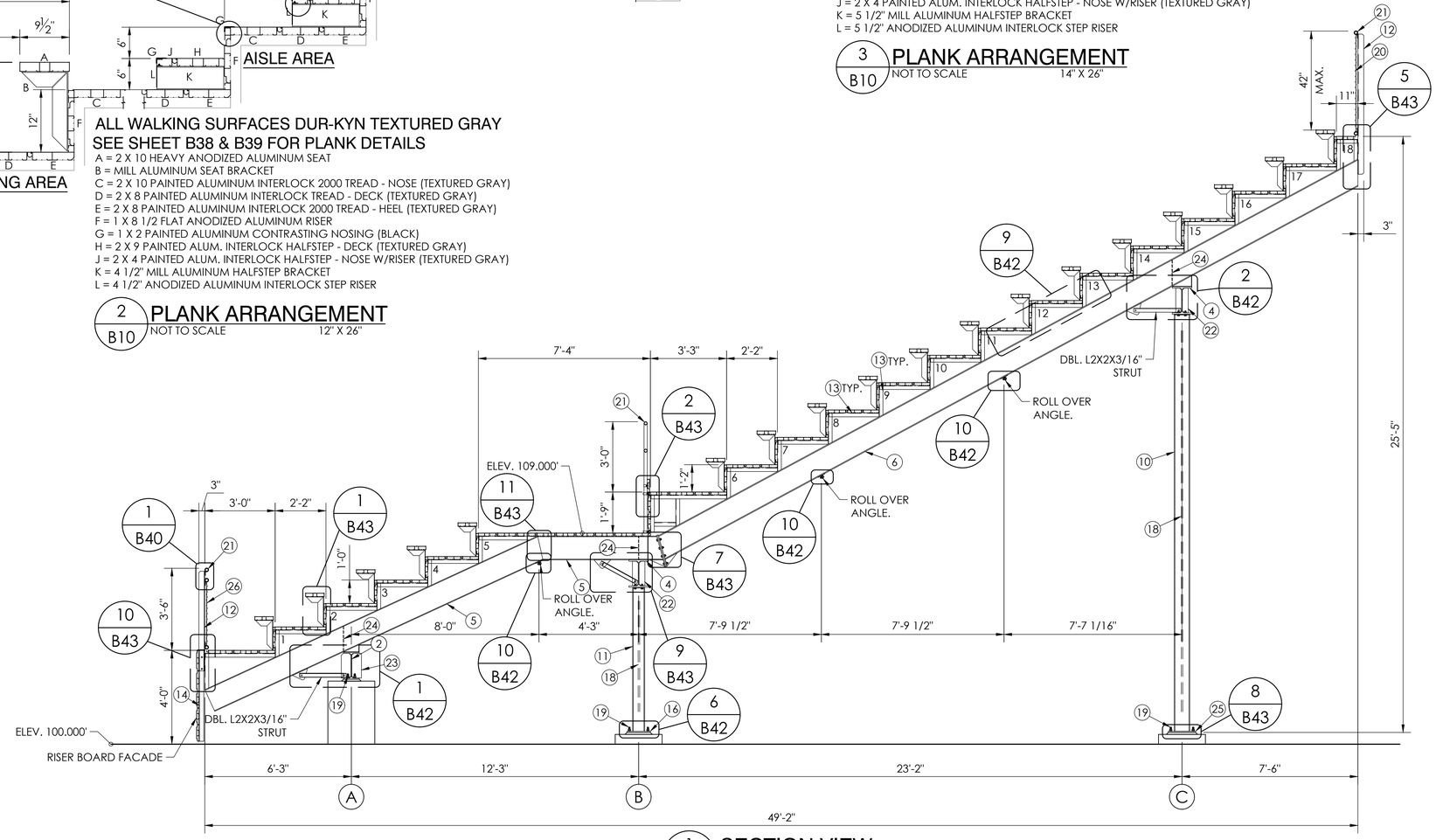

1 B10 **SECTION VIEW**
SCALE:3/8"=1'-0"

THIS DRAWING AND ALL INFORMATION THEREIN IS THE PROPERTY OF THE SOUTHERN BLEACHER COMPANY, MOB § 9144 AND IS CONFIDENTIAL AND MUST NOT BE MADE PUBLIC OR COPIED. THIS DRAWING IS LOANED SUBJECT TO RE-TURN UPON DEMAND AND, IS NOT TO BE USED DIRECTLY OR INDIRECTLY IN ANY WAY DETRIMENTAL TO OUR INTERESTS.

STRUCTURAL ENGINEERS
TAYLOR & SYFAN
CENTRAL Ph: (626) 793-7438
OFFICE Fax: (626) 793-7487
FOR (800) 379-3387
553 S. Oak Knoll Ave. Pasadena, CA 91101
http://www.tsinstructural.com/

Southern® BLEACHER COMPANY GRANDSTANDS •BLEACHERS •STADIUMS
Established 1946

PO Box One, Graham, Texas 76450
801 Fifth Street Phone: 940-549-0733 Fax: 940-549-1365

REGISTERED PROFESSIONAL ENGINEER BRIAN T. DEAKER S 6087 STRUCTURAL STATE OF CALIFORNIA
S&S 06/17/26
PRINCIPAL

PARLIER UNIFIED SCHOOL DISTRICT
PARLIER HIGH SCHOOL
PARLIER, CALIFORNIA

TYP. SECTION VIEW
REF 12/14" RISE X 26/26" TREAD / 331'-6" (5/13 ROWS)

REV	BY	DATE	DESCRIPTION

DATE 02/09/26 DRAWN JOA CHECKED DMC
JOB NUMBER #26011R2
SHEET B10 OF B43
22" X 34" (11x17 = 1/2 indicated scale)

26011R2

ITEM DESCRIPTION

1. W 12 X 58 (50 ksi)
2. W 14 X 48 (50 ksi)
3. W 14 X 53 (50 ksi)
4. W 14 X 68 (50 ksi)
5. W 12 X 19 (50 ksi)
6. W 12 X 22 (50 ksi)
7. W 12 X 30 (50 ksi)
8. W 10 X 12 (50 ksi)
9. W 10 X 15 (50 ksi)
10. W 8 X 31 (50 ksi)
11. W 6 X 20 (50 ksi)
12. L 3 X 3 X 1/4 (50 ksi)
13. L 2 X 2 X 3/16 (50 ksi)
14. L 2 X 1 1/2 X 3/16 (50 ksi)
15. L 1 1/2 X 1 1/2 X 3/16 (50 ksi)
16. 12 X 12 X 5/8 PLATE
17. 6 X 8 X 3/8 PLATE
18. 3/4 X REQ'D LENGTH SWAY ROD (50 ksi)
19. 3/4 X 18 ANCHOR BOLT W/2 HEX HEAD NUTS & FLAT WASHER
20. 1" MESH BLACK VINYL COATED CHAIN-LINK FENCE.
21. ANODIZED ALUMINUM RAIL (SEE NOTES)
22. 3 X 3/8 GUSSET PLATE (A36)
23. 5 X 3/8 GUSSET PLATE (A36)
24. 2 X 1/4 GUSSET PLATE (A36)
25. 14 X 14 X 5/8 PLATE
26. 2" MESH BLACK VINYL COATED CHAIN-LINK FENCE.

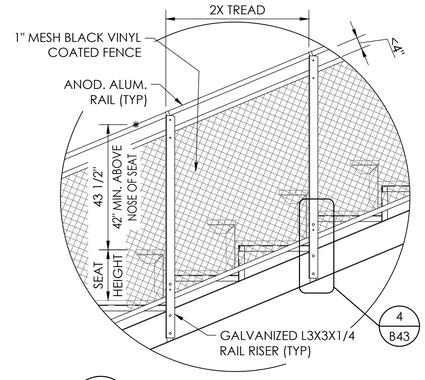

2 / B11 TYPICAL SIDE RAILING
SCALE:1/2"=1'-0"

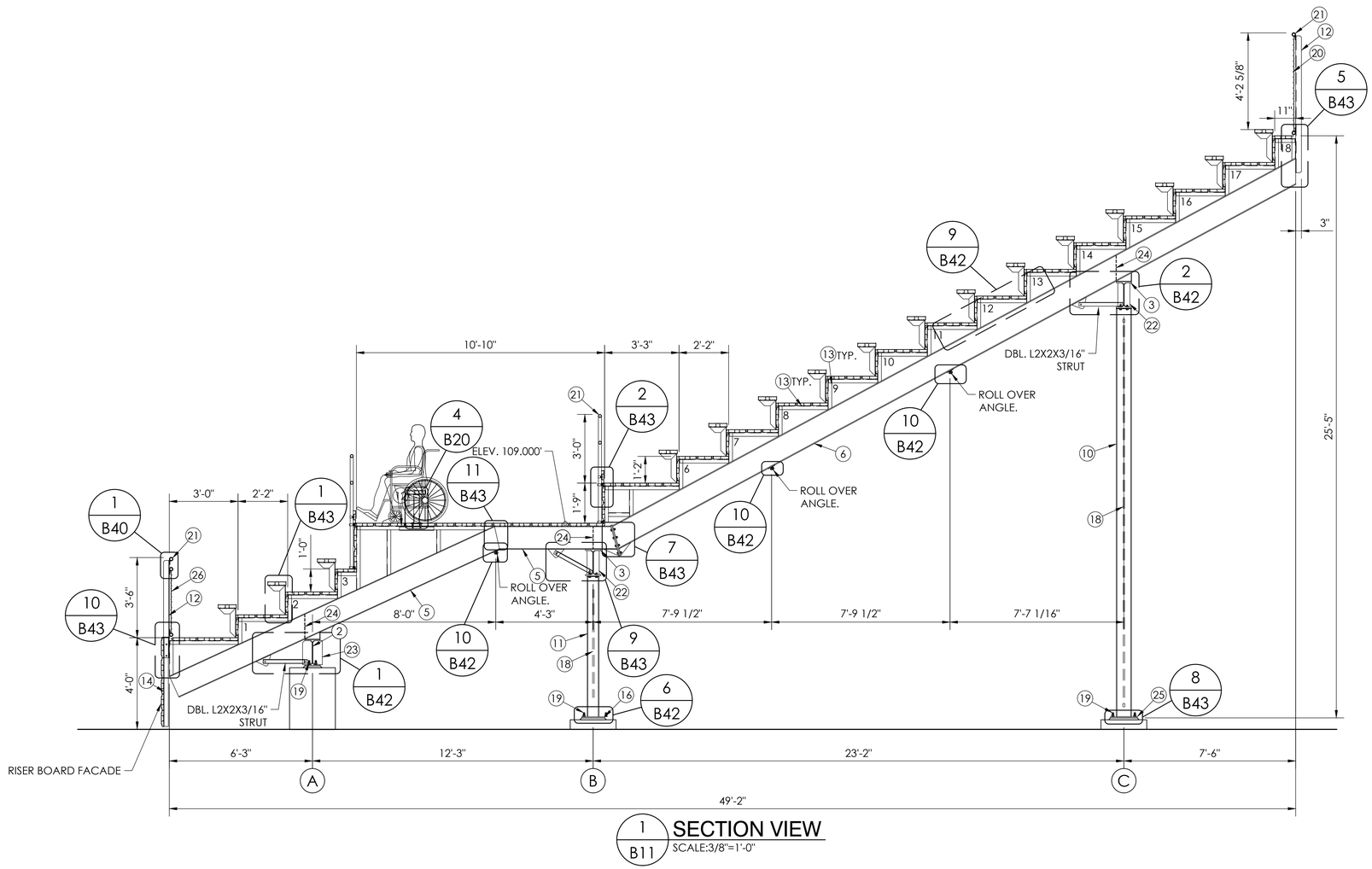

1 / B11 SECTION VIEW
SCALE:3/8"=1'-0"

THIS DRAWING AND ALL INFORMATION THEREIN IS THE PROPERTY OF THE SOUTHERN BLEACHER COMPANY, INC.® & SYFAN MFG. CO.® AND IS CONFIDENTIAL AND MUST NOT BE MADE PUBLIC OR COPIED. THIS DRAWING IS LOANED SUBJECT TO RE-TURN UPON DEMAND AND, IS NOT TO BE USED DIRECTLY OR INDIRECTLY IN ANY WAY DETRIMENTAL TO OUR INTERESTS.

STRUCTURAL ENGINEERS
CENTRAL OFFICE
553 S. Oak Knoll Ave. Pasadena, CA 91101
Ph: (626) 793-7438
Fax: (626) 793-3881
http://www.taructural.com

TAYLOR & SYFAN

Southern® BLEACHER COMPANY
GRANDSTANDS • BLEACHERS • STADIUMS
PO Box One, Graham, Texas 76450
801 Fifth Street
Phone: 940-549-0733 Fax: 940-549-1365
Established 1946

REGISTERED PROFESSIONAL ENGINEER
BRIAN T. DEATS
S 6087
STRUCTURAL
STATE OF CALIFORNIA
S&S
06/17/26
PRINCIPAL

TITLE: SECTION VIEW
12/14" RISE X 26/26" TREAD / 331'-6" (5/13 ROWS)

PARLIER UNIFIED SCHOOL DISTRICT
PARLIER HIGH SCHOOL
PARLIER, CALIFORNIA

REV	BY	DATE	DESCRIPTION

DATE 02/09/26 | DRAWN JOA | CHECKED DMC
JOB NUMBER #26011R2
SHEET B11 | OF B43

22" X 34" (11x17 = 1/2 indicated scale)

26011R2

ITEM DESCRIPTION

(1) W 12 X 58 (50 ksi)
(2) W 14 X 48 (50 ksi)
(3) W 14 X 53 (50 ksi)
(4) W 14 X 68 (50 ksi)
(5) W 12 X 19 (50 ksi)
(6) W 12 X 22 (50 ksi)
(7) W 12 X 30 (50 ksi)
(8) W 10 X 12 (50 ksi)
(9) W 10 X 15 (50 ksi)
(10) W 8 X 31 (50 ksi)
(11) W 6 X 20 (50 ksi)
(12) L 3 X 3 X 1/4 (50 ksi)
(13) L 2 X 2 X 3/16 (50 ksi)
(14) L 2 X 1 1/2 X 3/16 (50 ksi)
(15) L 1 1/2 X 1 1/2 X 3/16 (50 ksi)
(16) 12 X 12 X 5/8 PLATE
(17) 6 X 8 X 3/8 PLATE
(18) 3/4 X REQ'D LENGTH SWAY ROD (50 ksi)
(19) 3/4 X 18 ANCHOR BOLT W/2 HEX HEAD NUTS & FLAT WASHER
(20) 1" MESH BLACK VINYL COATED CHAIN-LINK FENCE.
(21) ANODIZED ALUMINUM RAIL (SEE NOTES)
(22) 3 X 3/8 GUSSET PLATE (A36)
(23) 5 X 3/8 GUSSET PLATE (A36)
(24) 2 X 1/4 GUSSET PLATE (A36)
(25) 14 X 14 X 5/8 PLATE
(26) 2" MESH BLACK VINYL COATED CHAIN-LINK FENCE.

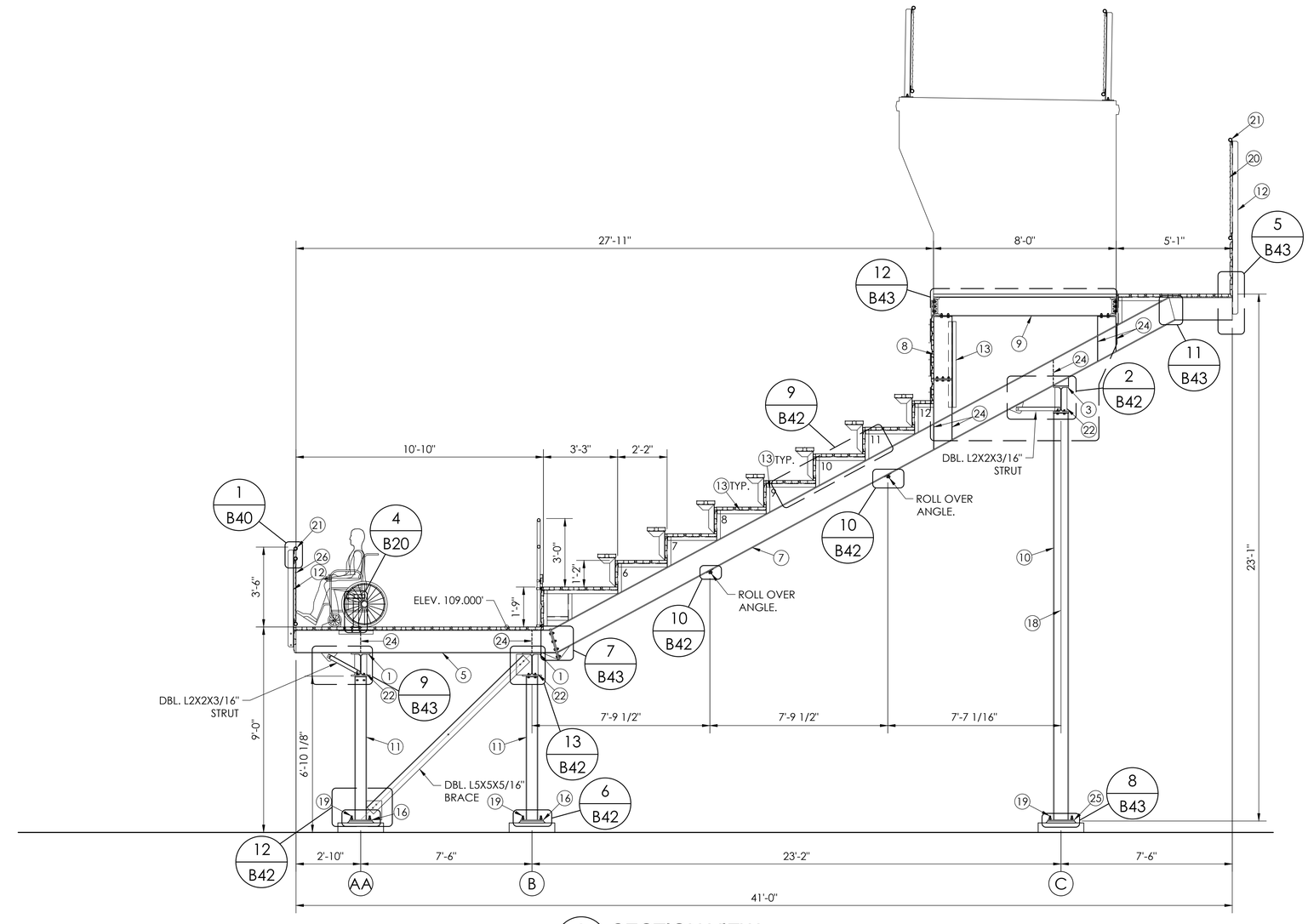

1 / B12 SECTION VIEW
SCALE:3/8"=1'-0"

THIS DRAWING AND ALL INFORMATION THEREIN IS THE PROPERTY OF THE SOUTHERN BLEACHER COMPANY, INC. & SYHAN AND IS CONFIDENTIAL AND NOT TO BE MADE PUBLIC OR COPIED. THIS DRAWING IS LOANED SUBJECT TO RE-TURN UPON DEMAND AND, IS NOT TO BE USED DIRECTLY OR INDIRECTLY IN ANY WAY DETRIMENTAL TO OUR INTERESTS.

STRUCTURAL ENGINEERS
TAYLOR & SYHAN
CENTRAL OFFICE
553 S. Oak Knoll Ave. Pasadena, CA 91101
Ph: (626) 793-7438
Fax: (626) 793-7439
FOR (800) 379-3881
http://www.tsstructural.com/

Southern BLEACHER COMPANY
GRANDSTANDS •BLEACHERS •STADIUMS
PO Box One, Graham, Texas 76450
801 Fifth Street
Phone: 940-549-0733 Fax: 940-540-1365
Established 1946

REGISTERED PROFESSIONAL ENGINEER
BRIAN T. DEAN
S 6087
STRUCTURAL
STATE OF CALIFORNIA
S&S
06/17/26
PRINCIPAL

TYPE: SECTION VIEW
12/14" RISE X 26/26" TREAD / 331'-6" (5/13 ROWS)

TITLE: PARLIER UNIFIED SCHOOL DISTRICT
PARLIER HIGH SCHOOL
PARLIER, CALIFORNIA

REV	BY	DATE	DESCRIPTION

DATE	DRAWN	CHECKED
02/09/26	JOA	DMC

JOB NUMBER #26011R2

SHEET B12 OF B43

22" X 34" (11x17 = 1/2 indicated scale)

26011R2

ITEM DESCRIPTION

1. W 12 X 58 (50 ksi)
2. W 14 X 48 (50 ksi)
3. W 14 X 53 (50 ksi)
4. W 14 X 68 (50 ksi)
5. W 12 X 19 (50 ksi)
6. W 12 X 22 (50 ksi)
7. W 12 X 30 (50 ksi)
8. W 10 X 12 (50 ksi)
9. W 10 X 15 (50 ksi)
10. W 8 X 31 (50 ksi)
11. W 6 X 20 (50 ksi)
12. L 3 X 3 X 1/4 (50 ksi)
13. L 2 X 2 X 3/16 (50 ksi)
14. L 2 X 1 1/2 X 3/16 (50 ksi)
15. L 1 1/2 X 1 1/2 X 3/16 (50 ksi)
16. 12 X 12 X 5/8 PLATE
17. 6 X 8 X 3/8 PLATE
18. 3/4 X REQ'D LENGTH SWAY ROD (50 ksi)
19. 3/4 X 18 ANCHOR BOLT W/2 HEX HEAD NUTS & FLAT WASHER
20. 1" MESH BLACK VINYL COATED CHAIN-LINK FENCE.
21. ANODIZED ALUMINUM RAIL (SEE NOTES)
22. 3 X 3/8 GUSSET PLATE (A36)
23. 5 X 3/8 GUSSET PLATE (A36)
24. 2 X 1/4 GUSSET PLATE (A36)
25. 14 X 14 X 5/8 PLATE
26. 2" MESH BLACK VINYL COATED CHAIN-LINK FENCE.

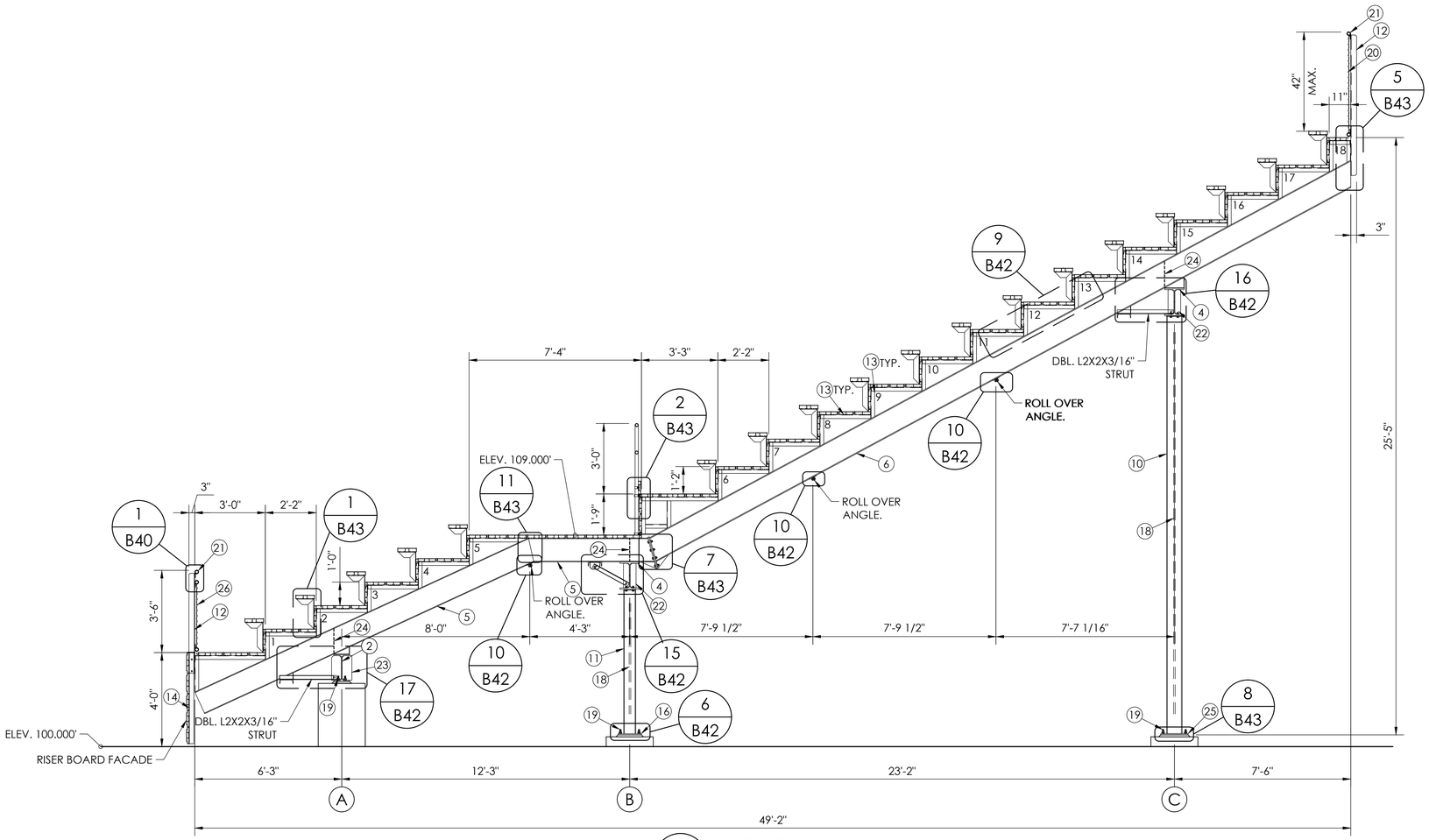

1 B13 SECTION VIEW
SCALE:3/8"=1'-0"

THIS DRAWING AND ALL INFORMATION THEREIN IS THE PROPERTY OF THE SOUTHERN BLEACHER COMPANY. SAVE AS STRAIN AND IS CONFIDENTIAL AND MUST NOT BE MADE PUBLIC OR COPIED. THIS DRAWING IS LOANED SUBJECT TO RE-TURN UPON DEMAND AND, IS NOT TO BE USED DIRECTLY OR INDIRECTLY IN ANY WAY DETRIMENTAL TO OUR INTERESTS.

STRUCTURAL ENGINEERS
CENTRAL OFFICE Ph: (626) 793-2438 Fax: (626) 793-2439 Toll: (800) 379-3881
553 S. Oak Knoll Ave. Pasadena, CA 91101
http://www.structural.com/
TAYLOR & SYFAN
Southern® BLEACHER COMPANY
GRANDSTANDS • BLEACHERS • STADIUMS
PO Box One, Graham, Texas 76450
801 Fifth Street
Phone: 940/549-0733 Fax: 940/549-1365
Established 1946

REGISTERED PROFESSIONAL ENGINEER
BRIAN T. DEAN
S 6087
STRUCTURAL
STATE OF CALIFORNIA
S&S 06/17/26
PRINCIPAL

TYPE: SECTION VIEW
12/14" RISE X 26/26" TREAD / 331'-6" (5/13 ROWS)

TITLE: PARLIER UNIFIED SCHOOL DISTRICT
PARLIER HIGH SCHOOL
PARLIER, CALIFORNIA

REV	BY	DATE	DESCRIPTION

DATE	DRAWN	CHECKED
02/09/26	JOA	DMC

JOB NUMBER #26011R2

SHEET B13 OF B43

22" X 34" (11x17 = 1/2 indicated scale)

26011R2

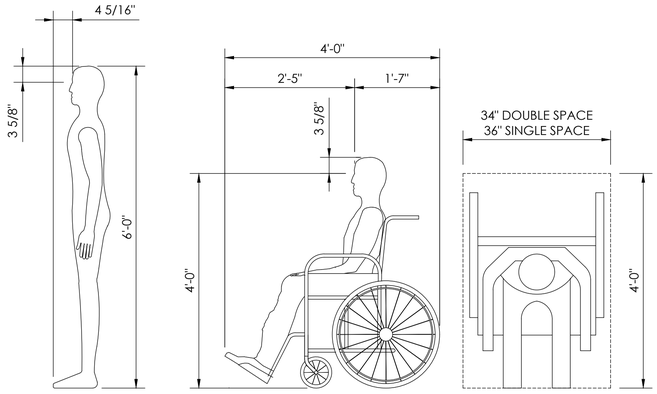

2 / B14 SIGHT LINE PARAMETERS
SCALE: 3/4"=1'-0"

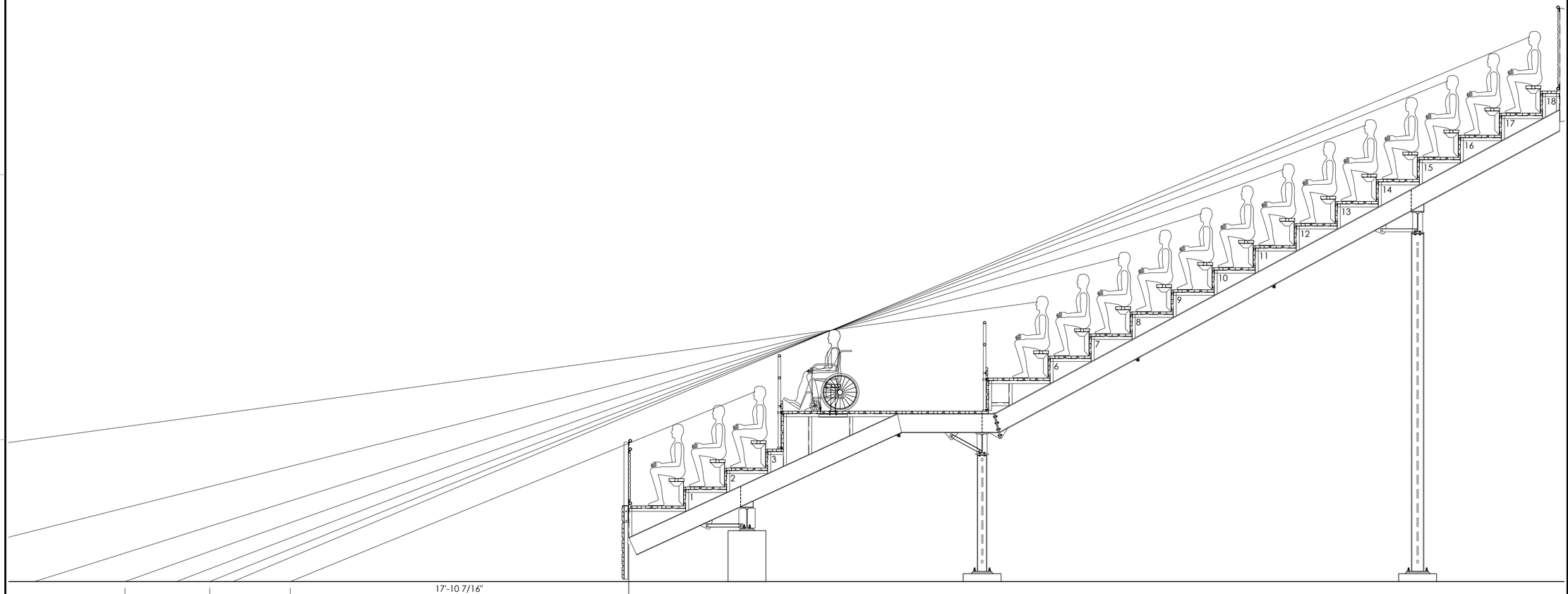

1 / B14 SIGHT LINES
SCALE:3/8"=1'-0"

THIS DRAWING AND ALL INFORMATION THEREIN IS THE PROPERTY OF THE SOUTHERN BLEACHER COMPANY, MOBILEPAN AND IS CONFIDENTIAL AND MUST NOT BE MADE PUBLIC OR COPIED. THIS DRAWING IS LOANED SUBJECT TO RE-TURN UPON DEMAND AND, IS NOT TO BE USED DIRECTLY OR INDIRECTLY IN ANY WAY DETRIMENTAL TO OUR INTERESTS.

STRUCTURAL ENGINEERS
TAYLOR & SYFAN
CONSULTING STRUCTURAL ENGINEERS
553 S. Oak Knoll Ave. Pasadena, CA 91101
Ph: (626) 793-7438
Fax: (626) 793-7439
http://www.tsinaturals.com/

Southern® BLEACHER COMPANY
GRANDSTANDS •BLEACHERS •STADIUMS
PO Box One, Graham, Texas 76450
801 Fifth Street
Phone: 940/549-0733 Fax: 940/549-1365
Established 1946

REGISTERED PROFESSIONAL ENGINEER
BRIAN T. DEAVER
S 6087
STRUCTURAL
STATE OF CALIFORNIA
S&S
06/17/26
PRINCIPAL

TYPE: SIGHT LINES
TITLE: 12/14" RISE X 26/26" TREAD / 331'-6" (5/13 ROWS)

PARLIER UNIFIED SCHOOL DISTRICT
PARLIER HIGH SCHOOL
PARLIER, CALIFORNIA

REV	BY	DATE	DESCRIPTION

DATE: 02/09/26 | DRAWN: JOA | CHECKED: DMC
JOB NUMBER: #26011R2
SHEET: B14 | OF: B43

22" X 34" (11x17 = 1/2 indicated scale)

26011R2

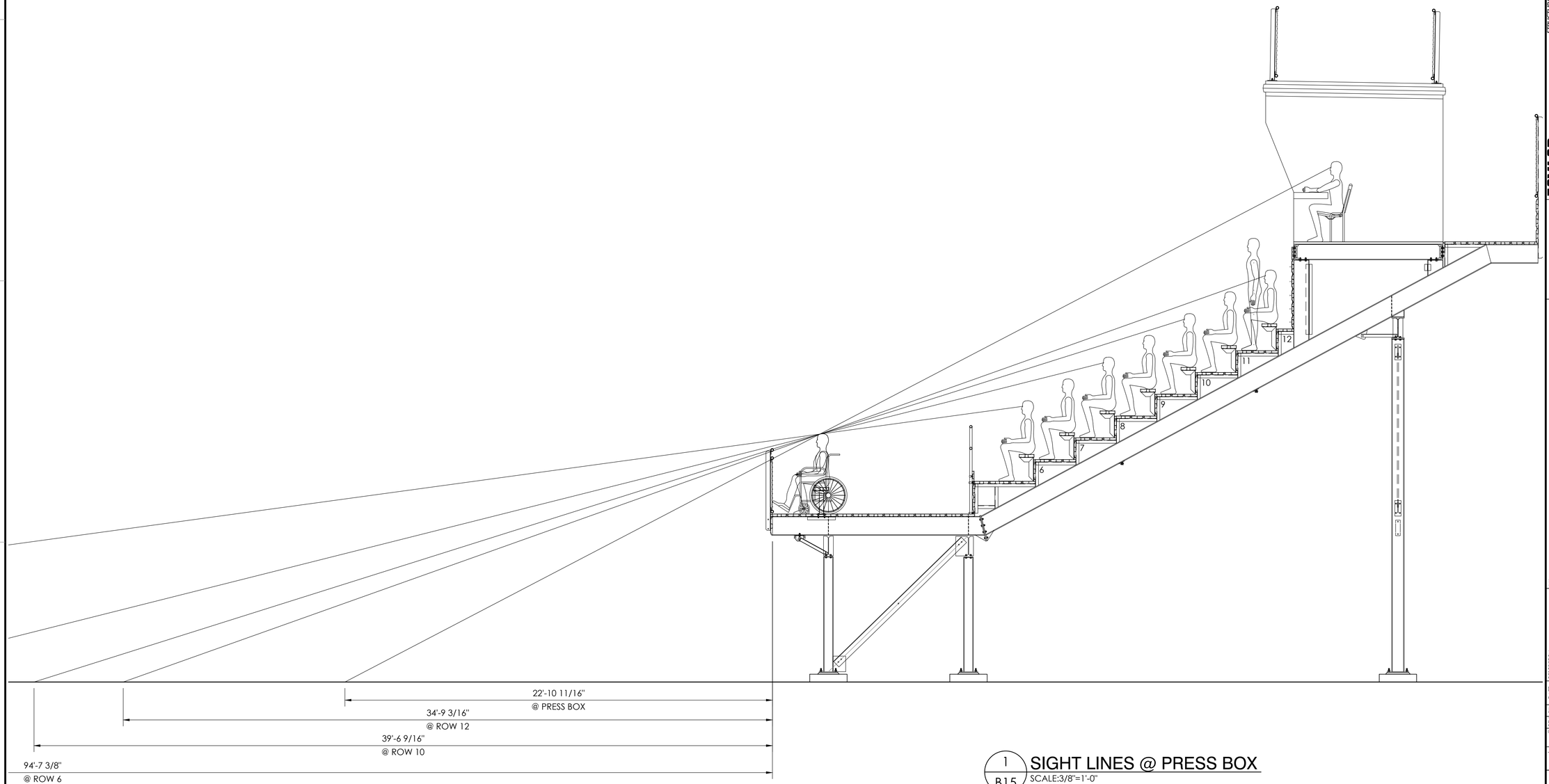

1 / B15 SIGHT LINES @ PRESS BOX
SCALE:3/8"=1'-0"

THIS DRAWING AND ALL INFORMATION THEREIN IS THE PROPERTY OF THE SOUTHERN BLEACHER COMPANY, STATOR & SYFAN AND IS CONFIDENTIAL AND MUST NOT BE MADE PUBLIC OR COPIED. THIS DRAWING IS LOANED SUBJECT TO RE-TURN UPON DEMAND AND, IS NOT TO BE USED DIRECTLY OR INDIRECTLY IN ANY WAY DETRIMENTAL TO OUR INTERESTS.

STRUCTURAL ENGINEERS
CENTRAL OFFICE Ph: (626) 793-7438 Fax: (626) 793-7439 Toll: (800) 379-3881
553 S. Oak Knoll Ave. Pasadena, CA 91101
http://www.structural.com/
TAYLOR & SYFAN
Southern® BLEACHER COMPANY
GRANDSTANDS • BLEACHERS • STADIUMS
PO Box One, Graham, Texas 76450
801 Fifth Street
Phone: 940/549-0733 Fax: 940/549-1365
Established 1946

REGISTERED PROFESSIONAL ENGINEER
BRIAN T. DEAN
S 6087
STRUCTURAL
STATE OF CALIFORNIA
S&S 06/17/26
PRINCIPAL

TYPE: SIGHT LINES
12/14" RISE X 26/26" TREAD / 331'-6" (5/13 ROWS)

TITLE: PARLIER UNIFIED SCHOOL DISTRICT
PARLIER HIGH SCHOOL
PARLIER, CALIFORNIA

REV	BY	DATE	DESCRIPTION

DATE	DRAWN	CHECKED
02/09/26	JOA	DMC

JOB NUMBER #26011R2

SHEET B15 OF B43

22" X 34" (11x17 = 1/2 indicated scale)

26011R2

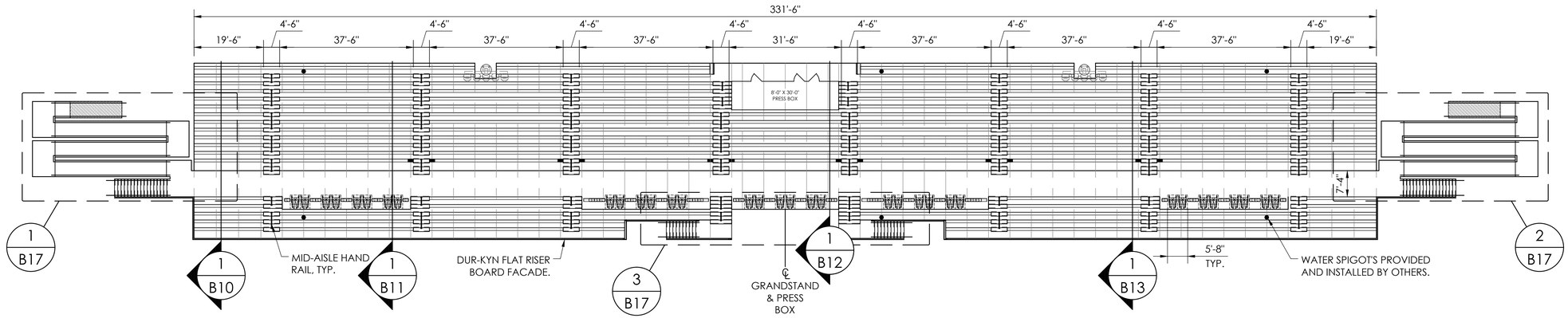

1 B16 **SEATING LAYOUT**
SCALE:1/16"=1'-0"

3009 TOTAL NET 18" SEATS
34 TOTAL NET 34" WHEELCHAIR SPACES
34 TOTAL NET 18" COMPANION SEATS = C
34 TOTAL NET 18" SEMI-AMBULANT SEATS = S
12 TOTAL NET 18" AISLE SEATS = ■
3123 TOTAL SEATING CAPACITY

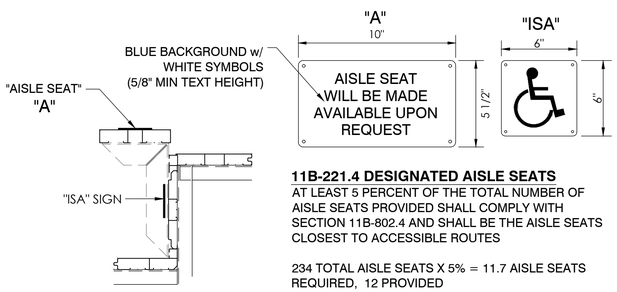

11B-221.4 DESIGNATED AISLE SEATS
AT LEAST 5 PERCENT OF THE TOTAL NUMBER OF AISLE SEATS PROVIDED SHALL COMPLY WITH SECTION 11B-802.4 AND SHALL BE THE AISLE SEATS CLOSEST TO ACCESSIBLE ROUTES

234 TOTAL AISLE SEATS X 5% = 11.7 AISLE SEATS REQUIRED, 12 PROVIDED

■ = AISLE SEATS

2 B16 **DESIGNATED AISLE SEATS**
NOT TO SCALE

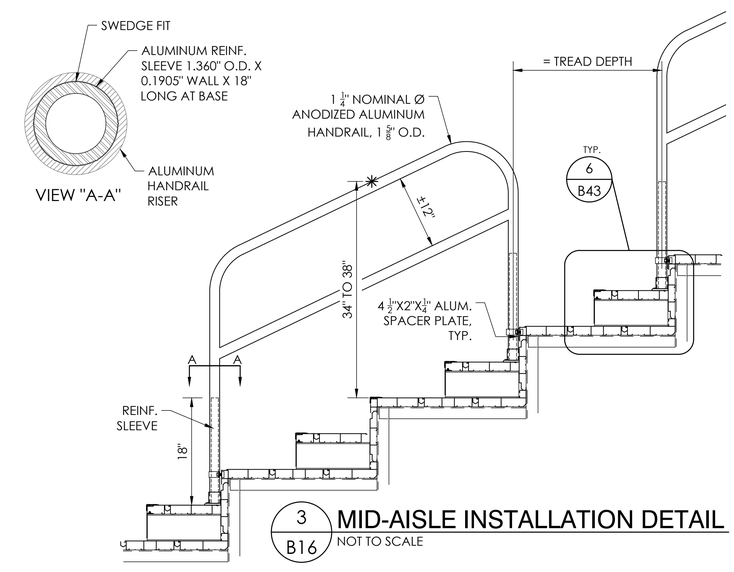

3 B16 **MID-AISLE INSTALLATION DETAIL**
NOT TO SCALE

THIS DRAWING AND ALL INFORMATION THEREIN IS THE PROPERTY OF THE SOUTHERN BLEACHER COMPANY, MCB & SYHA AND IS CONFIDENTIAL AND MUST NOT BE MADE PUBLIC OR COPIED. THIS DRAWING IS LOANED SUBJECT TO RE-TURN UPON DEMAND AND, IS NOT TO BE USED DIRECTLY OR INDIRECTLY IN ANY WAY DETRIMENTAL TO OUR INTERESTS.

STRUCTURAL ENGINEERS
TAYLOR & SYFAN
CONSULTANTS
OFFICE
553 S. Oak Knoll Ave. Pasadena, CA 91101
Ph: (626) 792-7438
Fax: (626) 792-7439
http://www.tsmanuals.com/
Southern®
BLEACHER COMPANY
GRANDSTANDS •BLEACHERS •STADIUMS
PO Box One, Graham, Texas 76450
801 Fifth Street
Phone: 940-549-0733 Fax: 940-549-1365
Established 1946

REGISTERED PROFESSIONAL ENGINEER
BRIAN T. DEAN
S 6087
STRUCTURAL
STATE OF CALIFORNIA
S&S
06/17/26
PRINCIPAL

REV	BY	DATE	DESCRIPTION

DATE 02/09/26 | DRAWN JOA | CHECKED DMC

JOB NUMBER #26011R2

SHEET B16 | OF B43

TITLE: SEATING LAYOUT
12/14" RISE X 26/26" TREAD / 331'-6" (5/13 ROWS)

PARLIER UNIFIED SCHOOL DISTRICT
PARLIER HIGH SCHOOL
PARLIER, CALIFORNIA

22" X 34" (11x17 = 1/2 indicated scale)

26011R2

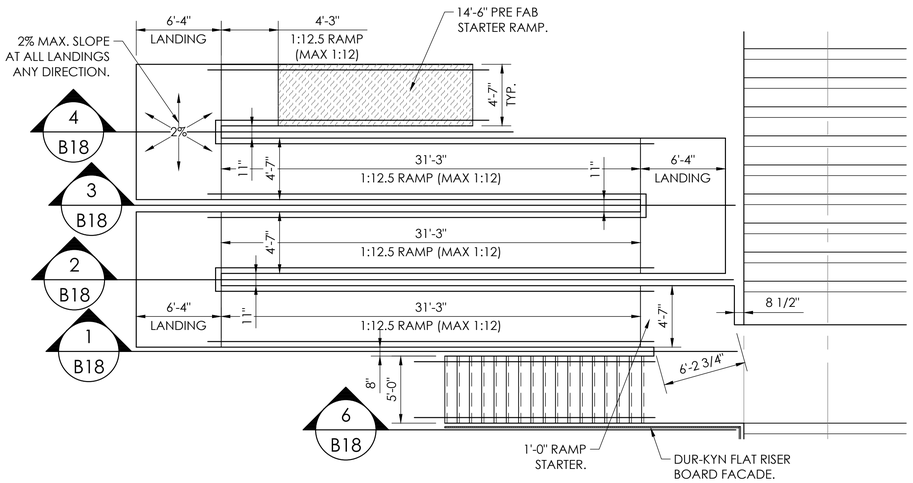

1 / B17 **LEFT SIDE EXIT LAYOUT**
SCALE:3/16"=1'-0"

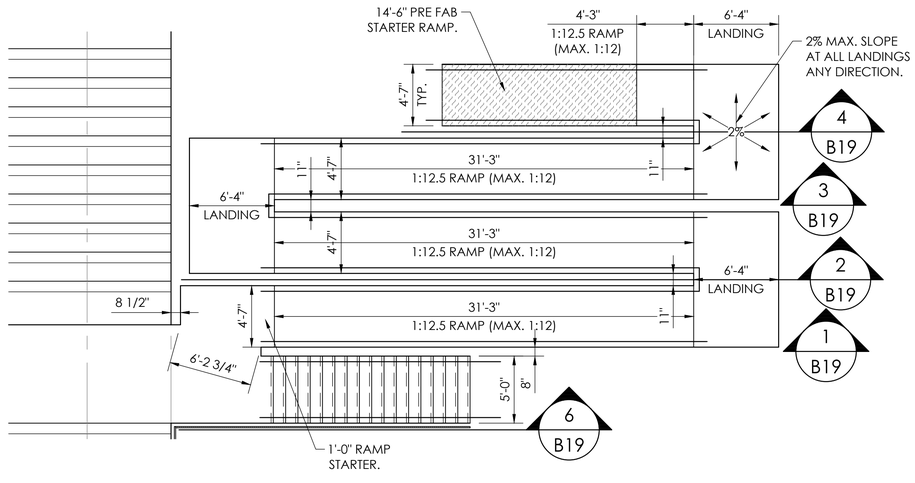

2 / B17 **RIGHT SIDE EXIT LAYOUT**
SCALE:3/16"=1'-0"

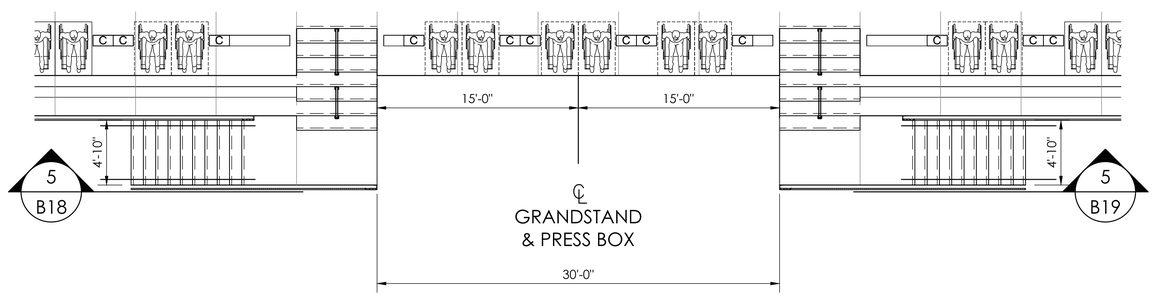

3 / B17 **FRONT EXIT LAYOUT**
SCALE:3/16"=1'-0"

THIS DRAWING AND ALL INFORMATION THEREIN IS THE PROPERTY OF THE SOUTHERN BLEACHER COMPANY, INC.® & SYFAN AND IS CONFIDENTIAL AND NOT TO BE MADE PUBLIC OR COPIED. THIS DRAWING IS LOANED SUBJECT TO RE-TURN UPON DEMAND AND, IS NOT TO BE USED DIRECTLY OR INDIRECTLY IN ANY WAY DETRIMENTAL TO OUR INTERESTS.

STRUCTURAL ENGINEERS
TAYLOR & SYFAN
CONTACT: Phn: (626) 797-7438
OFFICE: Fax: (626) 797-3881
553 S. Oak Knoll Ave. Pasadena, CA 91101
http://www.tsmanuel.com/

Southern®
BLEACHER COMPANY
GRANDSTANDS •BLEACHERS •STADIUMS
PO Box One, Graham, Texas 76450
801 Fifth Street Phone: 940-549-0733 Fax: 940-549-1368
Established 1946

REGISTERED PROFESSIONAL ENGINEER
BRIAN T. DEATHERAGE
S 6087
STRUCTURAL
STATE OF CALIFORNIA
S&S
06/17/26
PRINCIPAL

TYPE: EXIT LAYOUTS
12/14" RISE X 26/26" TREAD / 331'-6" (5/13 ROWS)

TITLE: PARLIER UNIFIED SCHOOL DISTRICT
PARLIER HIGH SCHOOL
PARLIER, CALIFORNIA

REV	BY	DATE	DESCRIPTION

DATE	DRAWN	CHECKED
02/09/26	JOA	DMC

JOB NUMBER #26011R2

SHEET B17 OF B43

22" X 34" (11x17 = 1/2 indicated scale)

26011R2

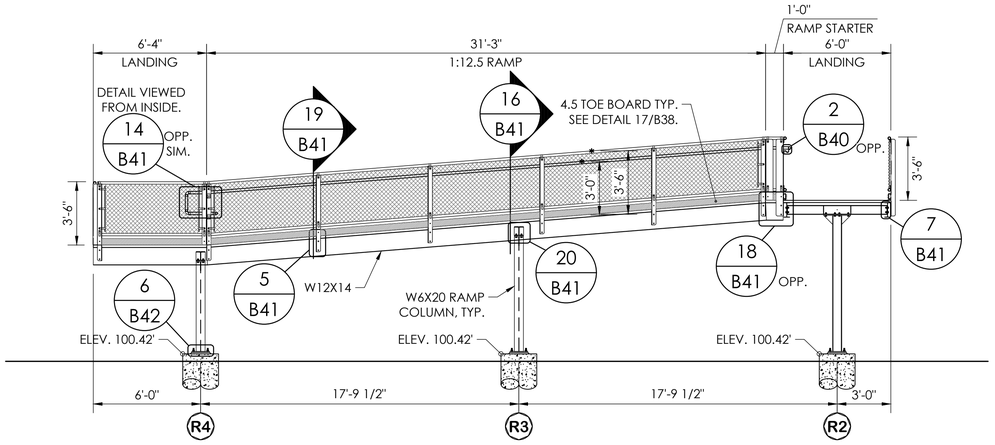

1 B18 **1:12.5 RAMP**
SCALE:1/4"=1'-0"

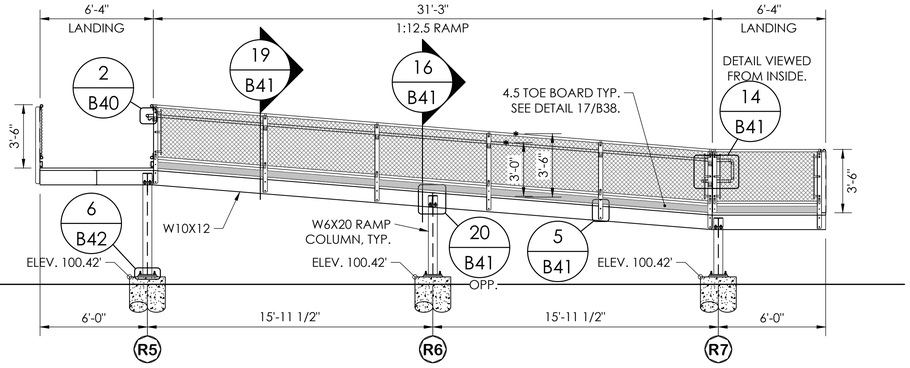

2 B18 **1:12.5 RAMP**
SCALE:1/4"=1'-0"

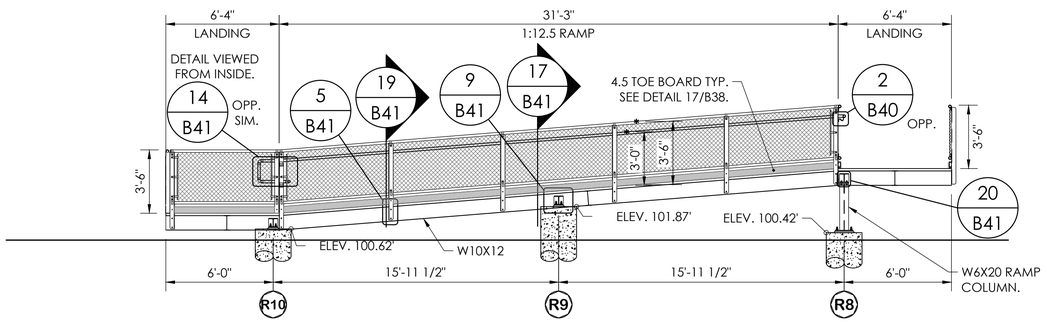

3 B18 **1:12.5 RAMP**
SCALE:1/4"=1'-0"

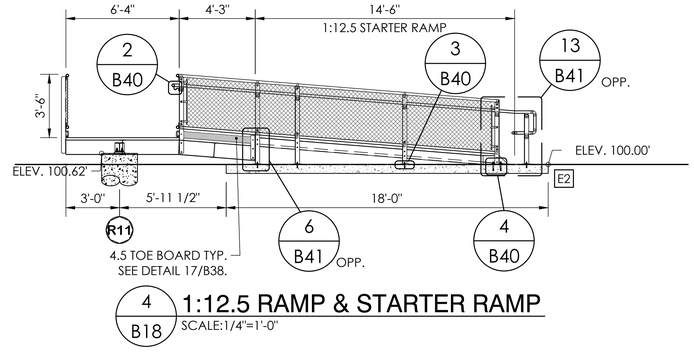

4 B18 **1:12.5 RAMP & STARTER RAMP**
SCALE:1/4"=1'-0"

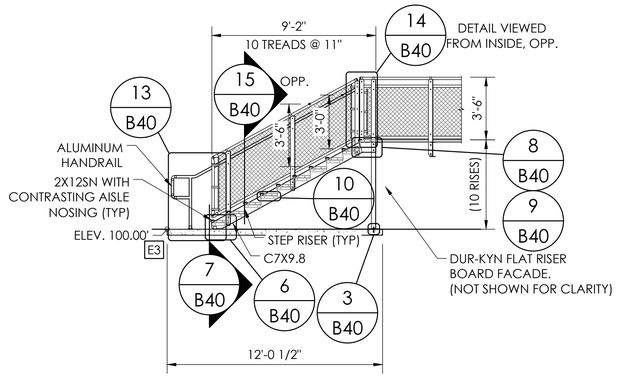

5 B18 **FRONT EXIT STAIRS**
SCALE:1/4"=1'-0"

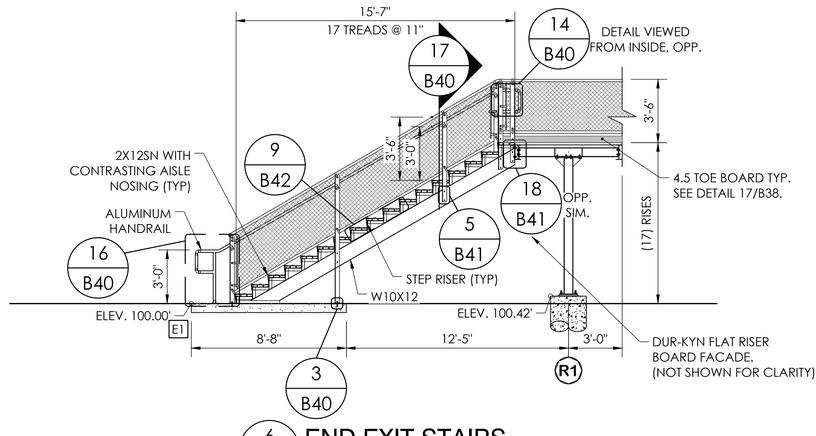

6 B18 **END EXIT STAIRS**
SCALE:1/4"=1'-0"

THIS DRAWING AND ALL INFORMATION THEREIN IS THE PROPERTY OF THE SOUTHERN BLEACHER COMPANY. IMOB § 9144 AND CONFIDENTIAL AND MUST NOT BE MADE PUBLIC OR COPIED. THIS DRAWING IS LOANED SUBJECT TO RE-TURN UPON DEMAND AND, IS NOT TO BE USED DIRECTLY OR INDIRECTLY IN ANY WAY DETRIMENTAL TO OUR INTERESTS.

STRUCTURAL ENGINEERS
TAYLOR & SYFAN
CONTRACT Ph: (626) 793-7438
PROJECT Fax: (626) 793-3881
553 S. Orchard Ave. Pasadena, CA 91101
http://www.tsmanuals.com/

Southern BLEACHER COMPANY
GRANDSTANDS •BLEACHERS •STADIUMS
PO Box One, Graham, Texas 76450
801 Fifth Street Phone: 940-549-0733 Fax: 940-549-1365
Established 1946

REGISTERED PROFESSIONAL ENGINEER
BRIAN T. DEAN
S 6087
STRUCTURAL
STATE OF CALIFORNIA
S&S
06/17/26
PRINCIPAL

TYPE: LEFT EXIT VIEWS
TITLE: 12/14" RISE X 26/26" TREAD / 331'-6" (5/13 ROWS)

PARLIER UNIFIED SCHOOL DISTRICT
PARLIER HIGH SCHOOL
PARLIER, CALIFORNIA

REV	BY	DATE	DESCRIPTION

DATE	DRAWN	CHECKED
02/09/26	JOA	DMC

JOB NUMBER #26011R2

SHEET B18 OF B43

22" X 34" (11x17 = 1/2 indicated scale)

26011R2

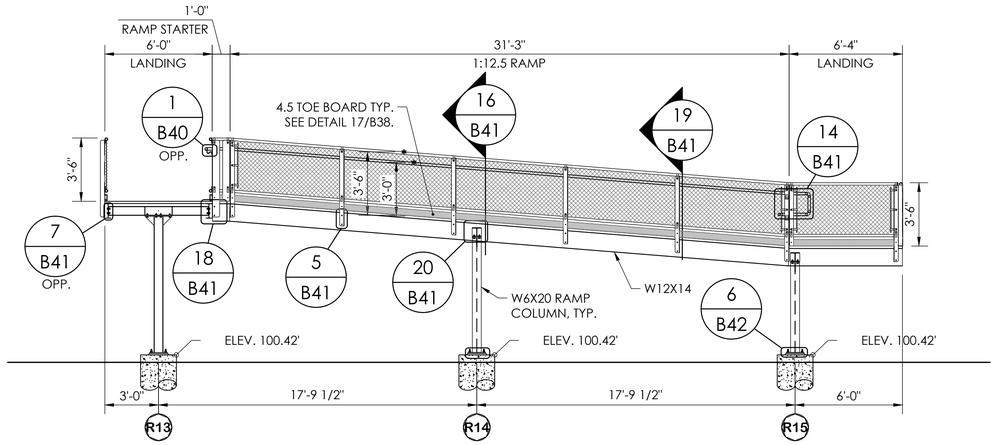

1 B19 **1:12.5 RAMP**
SCALE:1/4"=1'-0"

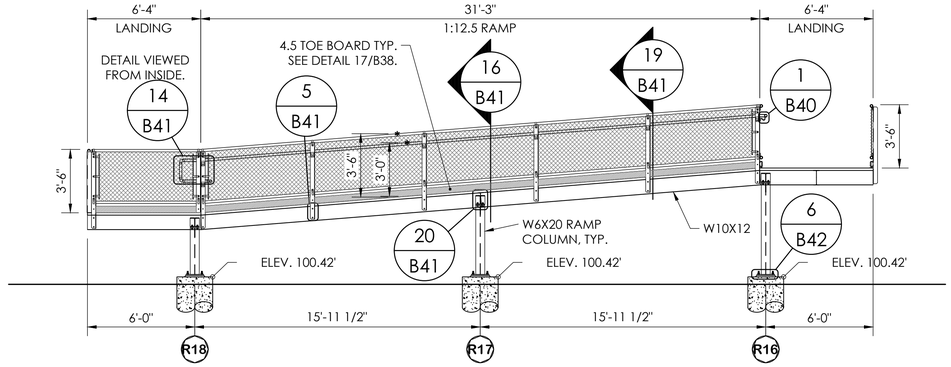

2 B19 **1:12.5 RAMP**
SCALE:1/4"=1'-0"

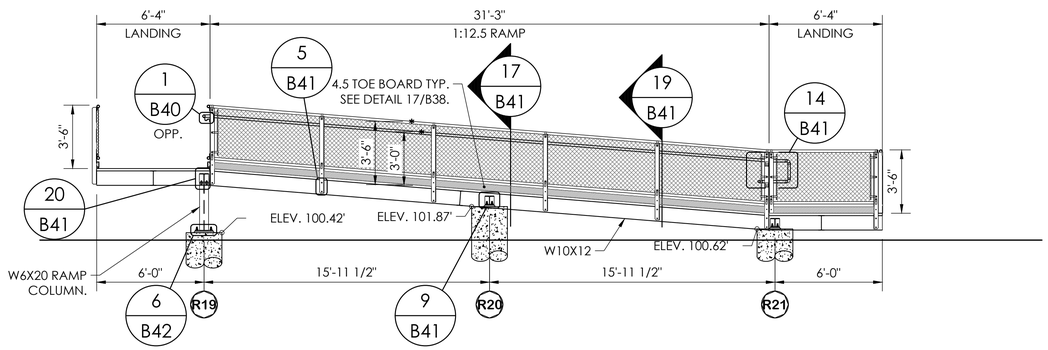

3 B19 **1:12.5 RAMP**
SCALE:1/4"=1'-0"

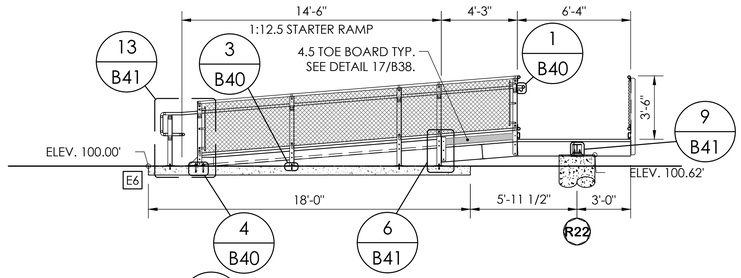

4 B19 **1:12.5 RAMP & STARTER RAMP**
SCALE:1/4"=1'-0"

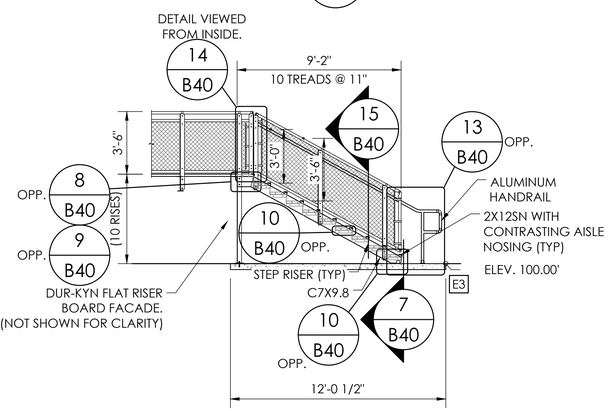

5 B19 **FRONT EXIT STAIRS**
SCALE:1/4"=1'-0"

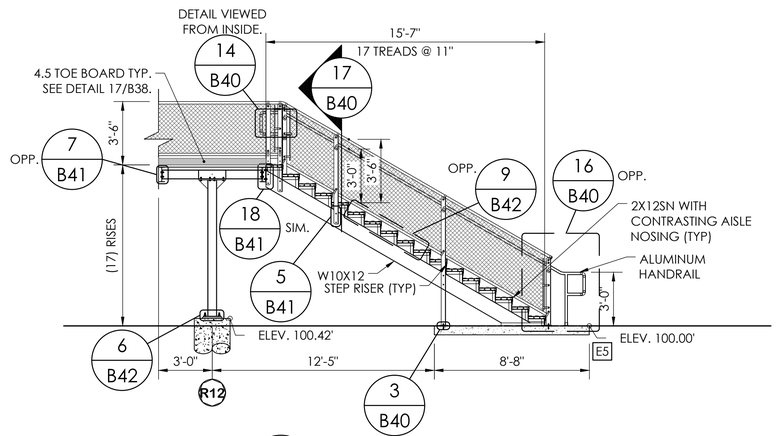

6 B19 **END EXIT STAIRS**
SCALE:1/4"=1'-0"

THIS DRAWING AND ALL INFORMATION THEREIN IS THE PROPERTY OF THE SOUTHERN BLEACHER COMPANY, MCB & SYKAN AND IS CONFIDENTIAL AND MUST NOT BE MADE PUBLIC OR COPIED. THIS DRAWING IS LOANED SUBJECT TO RE-TURN UPON DEMAND AND, IS NOT TO BE USED DIRECTLY OR INDIRECTLY IN ANY WAY DETRIMENTAL TO OUR INTERESTS.

STRUCTURAL ENGINEERS
TAYLOR & SYKAN
CENTRAL Ph: (626) 793-7438
PACIFIC Fax: (626) 793-3881
FOR (800) 379-3881
553 S. Old Randall Ave. Pasadena, CA 91101
http://www.tsinaturals.com/

Southern®
BLEACHER COMPANY
GRANDSTANDS •BLEACHERS •STADIUMS
Established 1946
PO Box One, Graham, Texas 76450
801 Fifth Street Phone: 940-549-0733 Fax: 940-549-1365

REGISTERED PROFESSIONAL ENGINEER
BRIAN T. DEAN
S 6087
STRUCTURAL
STATE OF CALIFORNIA
S&S 06/17/26
PRINCIPAL

TYPE: RIGHT EXIT VIEWS
12/14" RISE X 26/26" TREAD / 3331-6" (5/13 ROWS)
TITLE:

PARLIER UNIFIED SCHOOL DISTRICT
PARLIER HIGH SCHOOL
PARLIER, CALIFORNIA

REV	BY	DATE	DESCRIPTION

DATE 02/09/26 | DRAWN JOA | CHECKED DMC

JOB NUMBER #26011R2

SHEET B19 | OF B43

22" X 34" (1:1 x17 = 1/2 indicated scale)

26011R2

CBC 2025:
PROVIDE 0.08" WIDTH PER SEAT FOR AISLES & STAIRS:
EQUIVALENT TO 150 PEOPLE PER FOOT.
PROVIDE 0.06" WIDTH PER SEAT FOR RAMPS:
EQUIVALENT TO 200 PEOPLE PER FOOT.

692 "L" BRACKETS (14 X 26 JIG)
178 "L" BRACKETS (12 X 26 JIG)
62 MAVERICK BENCH LEGS

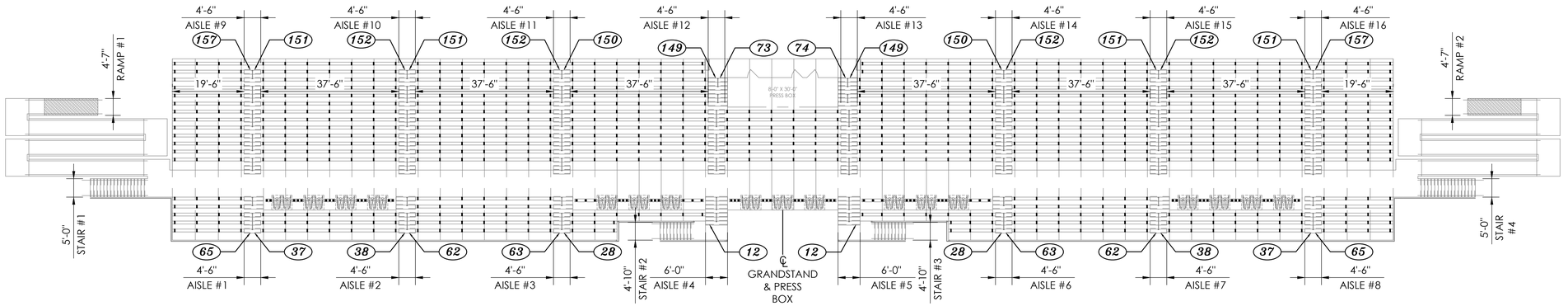

1 B20 **SEAT BRACKET LAYOUT**
SCALE:1/16"=1'-0"

AISLE WIDTH CALCULATIONS:

AISLE #1 & #8
REQUIRED AISLE WIDTH = 102 SEATS X 0.08" PER SEAT = 0'-8 13/16"
<4'-0" CODE MINIMUM <4'-6" PROVIDED - OK

AISLE #2 & #7
REQUIRED AISLE WIDTH = 100 SEATS X 0.08" PER SEAT = 0'-8"
<4'-0" CODE MINIMUM <4'-6" PROVIDED - OK

AISLES #3 & #6
REQUIRED AISLE WIDTH = 91 SEATS X 0.08" PER SEAT = 0'-7 1/4"
<4'-0" CODE MINIMUM <4'-6" PROVIDED - OK

AISLE #4 & #5
REQUIRED AISLE WIDTH = 12 SEATS X 0.08" PER SEAT = 0'-0 15/16"
<4'-0" CODE MINIMUM <6'-0" PROVIDED - OK

AISLE #9 & #16
REQUIRED AISLE WIDTH = 308 SEATS X 0.08" PER SEAT = 2'-0 5/8"
<4'-0" CODE MINIMUM <4'-6" PROVIDED - OK

AISLE #10 & #15
REQUIRED AISLE WIDTH = 303 SEATS X 0.08" PER SEAT = 2'-0 1/4"
<4'-0" CODE MINIMUM <4'-6" PROVIDED - OK

AISLE #11 & #14
REQUIRED AISLE WIDTH = 302 SEATS X 0.08" PER SEAT = 2'-0 3/16"
<4'-0" CODE MINIMUM <4'-6" PROVIDED - OK

AISLE #12
REQUIRED AISLE WIDTH = 222 SEATS X 0.08" PER SEAT = 1'-5 3/4"
<4'-0" CODE MINIMUM <4'-6" PROVIDED - OK

AISLE #13
REQUIRED AISLE WIDTH = 223 SEATS X 0.08" PER SEAT = 1'-5 13/16"
<4'-0" CODE MINIMUM <4'-6" PROVIDED - OK

AISLE ACCESSWAY (DEAD END AISLE):
26" TREAD DEPTH
CLEAR WIDTH = DEPTH (26") LESS SEAT WIDTH (9.5") = 16.5"
10 SEATS FIRST 12" CLEAR = 10 SEATS
0.6" EACH ADDITIONAL SEAT: 16.5"-12" / 0.6" = 7 SEATS
MAXIMUM SEATS BETWEEN AISLES: 17 SEATS
MAXIMUM WIDTH BETWEEN AISLES: 17 X 1.5' / SEAT = 25'-6"
MAXIMUM ROW LENGTH SHOWN = 19'-6"

AISLE ACCESSWAY (SEATING EACH SIDE):
26" TREAD DEPTH
CLEAR WIDTH = DEPTH (26") LESS SEAT WIDTH (9.5") = 16.5"
21 SEATS FIRST 12" CLEAR = 21 SEATS
0.3" EACH ADDITIONAL SEAT: 16.5"-12" / 0.3" = 15 SEATS
MAXIMUM SEATS BETWEEN AISLES: 36 SEATS
MAXIMUM WIDTH BETWEEN AISLES: 36 X 1.5' / SEAT = 54'-0"
MAXIMUM ROW LENGTH SHOWN = 37'-6"

EXIT WIDTH CALCULATIONS:
STAIRS #1 & #4 @ 5'-0" = 10'-0"
STAIRS #2 & #3 @ 4'-10" = 9'-8"
19'-8" TOTAL STAIR EXIT WIDTH

RAMPS #1 & #2 @ 4'-7" = 9'-2"
9'-2" TOTAL RAMP EXIT WIDTH

STAIR EXIT CAPACITY
19'-9" X 150 PEOPLE PER FOOT = 2950 STAIR EXIT CAPACITY FURNISHED
RAMP EXIT CAPACITY
9'-2" X 200 PEOPLE PER FOOT = 1833 RAMP EXIT CAPACITY FURNISHED
4783 TOTAL EXIT CAPACITY
(ACTUAL CAPACITY 3123)

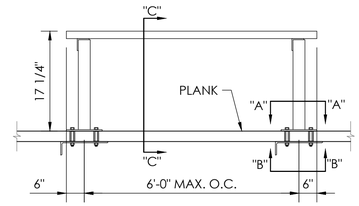

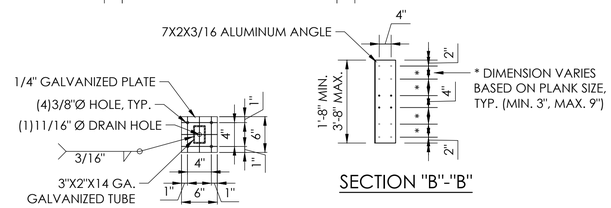

SECTION "A"-"A"

SECTION "B"-"B"

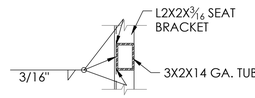

SECTION "D"-"D"

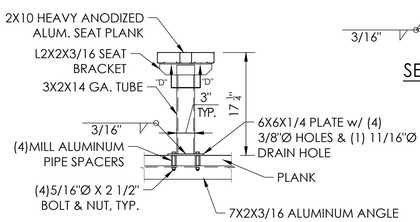

SECTION "C"-"C"

4 B20 **MAVERICK BENCH DETAIL**
NOT TO SCALE

NOTE:
ALL DIMENSIONS SHOWN ON SEAT BRACKET LAYOUT ARE TO/FROM THE WELDED EDGE OF THE BRACKET

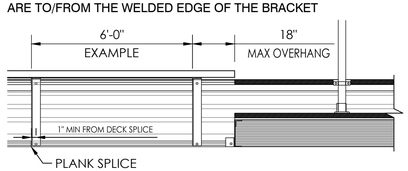

2 B20 **SEAT BRACKET SPACING**
NOT TO SCALE

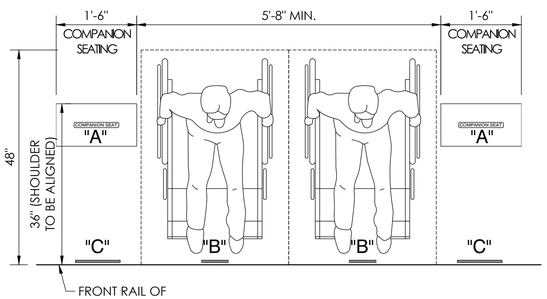

3 B20 **SIGN DETAIL**
NOT TO SCALE

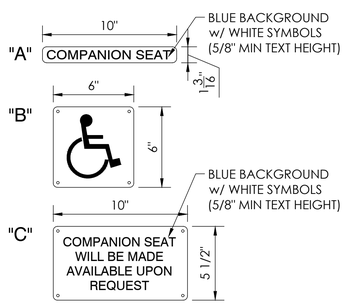

SIGNAGE TYP. @ WHEELCHAIR AREAS
A = COMPANION: 1 3/16" X 10" PLASTIC
B = ACCESSIBLE: 6" X 6" 0.040 ALUM.
C = COMPANION: 5 1/2" X 10" 0.040 ALUM.

THIS DRAWING AND ALL INFORMATION THEREIN IS THE PROPERTY OF THE SOUTHERN BLEACHER COMPANY, INC(A §1544 ACE) CONFIDENTIAL AND NOT TO BE MADE PUBLIC OR COPIED. THIS DRAWING IS LOANED SUBJECT TO RE-TURN UPON DEMAND AND, IS NOT TO BE USED DIRECTLY OR INDIRECTLY IN ANY WAY DETRIMENTAL TO OUR INTERESTS.

STRUCTURAL ENGINEERS
CONTACT: Ryan Dent
OFFICE: (626) 792-7438
FAX: (626) 792-7439
553 S. Oak Knoll Ave. Pasadena, CA 91101
http://www.taylorandyoffa.com/

TAYLOR & YOFFA

Southern® BLEACHER COMPANY
GRANDSTANDS •BLEACHERS •STADIUMS
PO Box One, Graham, Texas 76450
801 Fifth Street Phone: 940/549-0733 Fax: 940/540-1365
Established 1946

REGISTERED PROFESSIONAL ENGINEER BRIAN T. DENT S 6087 STRUCTURAL STATE OF CALIFORNIA
S&S 06/17/26
PRINCIPAL

SEAT BRACKET LAYOUT
12/14" RISE X 26/26" TREAD / 331'-6" (5/13 ROWS)

PARLIER UNIFIED SCHOOL DISTRICT
PARLIER HIGH SCHOOL
PARLIER, CALIFORNIA

REV	BY	DATE	DESCRIPTION

DATE 02/09/26 | DRAWN JOA | CHECKED DMC
JOB NUMBER #26011R2
SHEET B20 | OF B43

22" X 34" (11x17 = 1/2 indicated scale)

26011R2

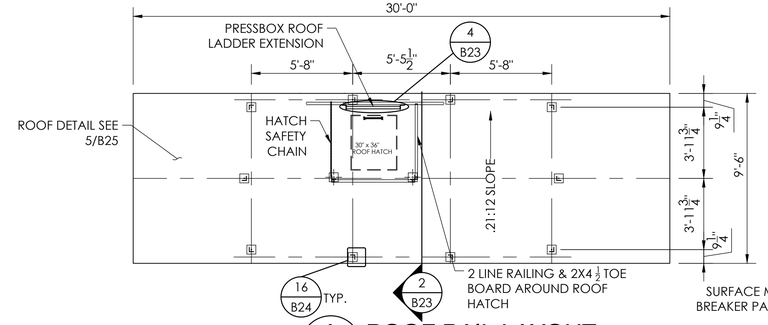

1 B21 ROOF RAIL LAYOUT
SCALE: 1/4"=1'-0"

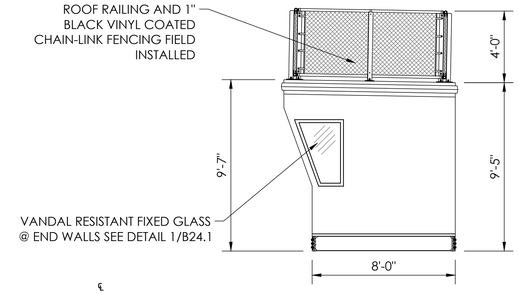

5 B21 SIDE VIEW
SCALE: 1/4"=1'-0"

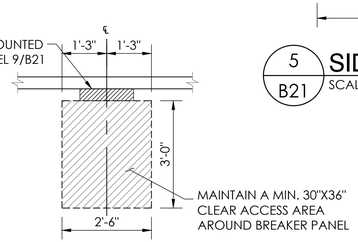

7 B21 BREAKER PANEL ACCESS
NOT TO SCALE

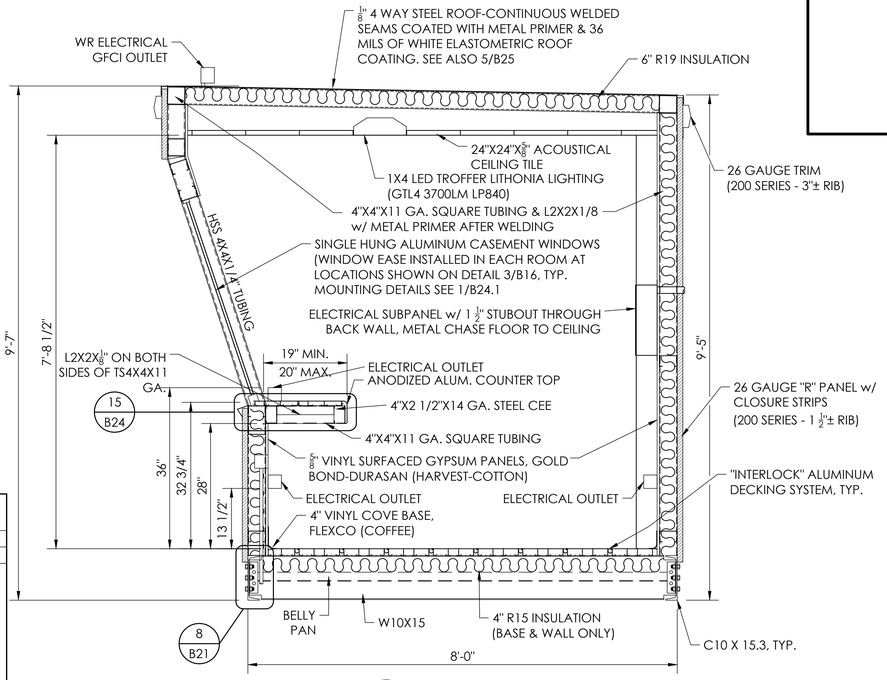

6 B21 SECTION VIEW
SCALE: 3/4"=1'-0"

NOTES:

WALL PANELS ARE ATTACHED: #12 TEK SCREWS, 5/16" WASHER HEAD AND SEALER. SCREWS EACH SIDE OF HIGH RIB: 6 TOP, 6 INTERMEDIATE & 6 BOTTOM.

LAP SCREWS ARE PLACED AT EACH END OF THE PANELS, AT THE INTERMEDIATE SUPPORT AND AT THE MID POINT BETWEEN SUPPORTS (TEK #14)

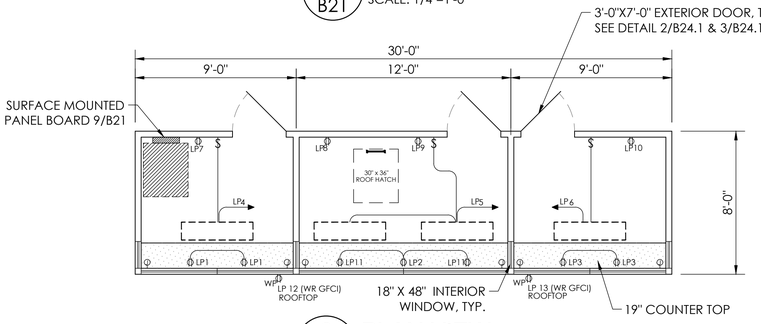

2 B21 PLAN VIEW
SCALE: 1/4"=1'-0"

PANEL BOARD SCHEDULE

PANEL LP — 100 AMP - 16 CIRCUIT W/ EQUIPMENT GROUND — 240/120 VOLTS — 1 PH.

MOUNTING: ☐ FLUSH ☒ SURFACE — 10,000 SYN. A.I.C. MIN. — 100 AMP MAIN BREAKER

	BREAKER SIZE	BREAKER POLE	CIR. #	BUS A	BUS B	CIR. #	BREAKER SIZE	BREAKER POLE	
RECPT. FRONT WALL	20	1	1			2	20	1	RECPT. FRONT WALL
RECPT. FRONT WALL	20	1	3			4	20	1	(1) LED FIXTURES
(2) LED FIXTURES	20	1	5			6	20	1	(1) LED FIXTURES
RECPT. BACK WALL	20	1	7			8	20	1	RECPT. BACK WALL
RECPT. BACK WALL	20	1	9			10	20	1	RECPT. BACK WALL
(2) RECPT. FRONT WALL	20	1	11			12	20	1	RECPT. ROOF
RECPT. ROOF	20	1	13			14			SPACE
SPACE			15			16			SPACE
SPACE			17			18			SPACE
SPACE			19			20			SPACE
SPACE			21			22			SPACE
SPACE			23			24			SPACE
SPACE			25			26			SPACE
SPACE			27			28			SPACE
SPACE			29			30			SPACE

- 20A. 125V. DUPLEX RECPT.
- $3 20A. 125V. 3 POLE SWITCH
- $ 20A. 125V. SINGLE POLE SWITCH
- (J) 4X4X2 1/8" JUNCTION BOX W/ 3/4"C STUBOUT
- LED FIXTURE; INDY, LOW PROFILE, LAY-IN FIXTURE (S1X4BL-5550U-WH3)

CONDUIT WILL BE 1/2" EMT, 1/2" STEELFLEX, OR SURFACE RACEWAY UNLESS OTHERWISE NOTED

WIRING ON 20A BREAKERS WILL BE #12 = THWN - THHN

EQUIPMENT GROUND RUN IN ALL CONDUITS OR NON-METALLIC SURFACE RACEWAYS

PRESS BOX COLOR SELECTION SCHEDULE

EXTERIOR SHEET METAL COMPONENTS

SIGNATURE 200 STANDARD COLORS FOR PRESS BOX COLOR SELECTION. PLEASE MARK COLOR SELECTIONS FOR EACH MATERIAL ON THIS COLOR SCHEDULE.	MATERIALS: EXTERIOR SIDING	ROOF TRIM	WINDOW / DOOR TRIM	EXTERIOR DOORS
HAWAIIAN BLUE				
CRIMSON RED				
FERN GREEN				
BURNISHED SLATE				
POLAR WHITE				
ASH GREY				
SADDLE TAN				
DESERT SAND				
KOKO BROWN				
SOLAR WHITE				
CHARCOAL GREY				
COBALT BLUE				
RUSTIC RED				
LIGHT STONE				

WINDOW FRAMES	
WHITE	
BRONZE	
TAN	
SILVER	

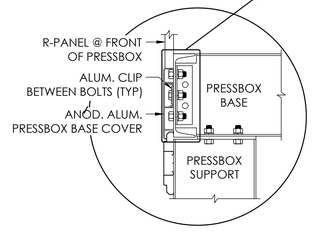

8 B21 PRESS BOX BASE TRIM DETAIL
NOT TO SCALE

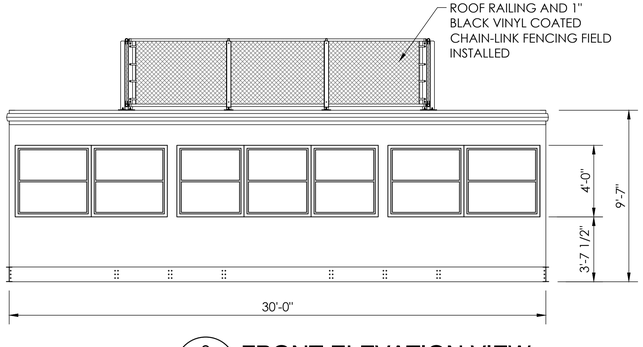

3 B21 FRONT ELEVATION VIEW
SCALE: 1/4"=1'-0"

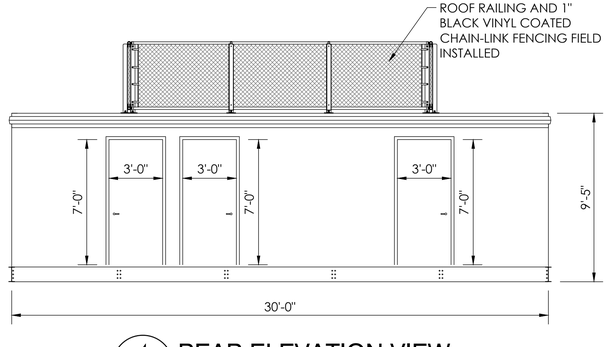

4 B21 REAR ELEVATION VIEW
SCALE: 1/4"=1'-0"

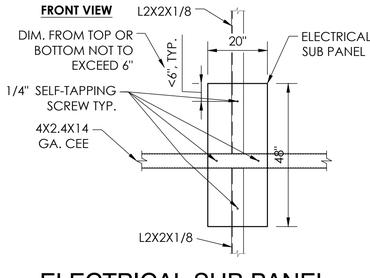

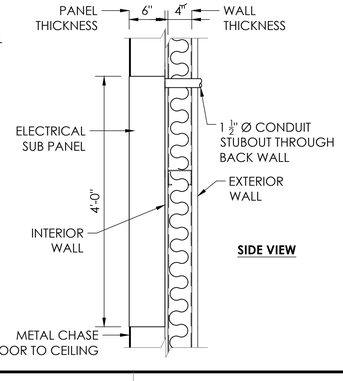

9 B21 ELECTRICAL SUB PANEL MOUNTING DETAIL
NOT TO SCALE

PANEL BOARD MAX OPERATING WEIGHT: 100 LBS.

THIS DRAWING AND ALL INFORMATION THEREIN IS THE PROPERTY OF THE SOUTHERN BLEACHER COMPANY, MOBILE, AL AND IS CONFIDENTIAL AND MUST NOT BE MADE PUBLIC OR COPIED. THIS DRAWING IS LOANED SUBJECT TO RE-TURN UPON DEMAND AND, IS NOT TO BE USED DIRECTLY OR INDIRECTLY IN ANY WAY DETRIMENTAL TO OUR INTERESTS.

STRUCTURAL ENGINEERS
CONTACT: BRIAN T. DEAN, P.E.
PH: (626) 793-7438
FAX: (626) 793-7388
553 S. Oakhurst Drive, Arcadia, CA 91101
http://www.tsmarchitects.com/

TAYLOR & YEAN
Southern BLEACHER COMPANY
GRANDSTANDS • BLEACHERS • STADIUMS
PO Box One, Graham, Texas 76450
801 Fifth Street
Phone: 940-549-0733 Fax: 940-549-1365
Established 1946

REGISTERED PROFESSIONAL ENGINEER — BRIAN T. DEAN — S 6087 — STRUCTURAL — STATE OF CALIFORNIA
S&S 06/17/26
PRINCIPAL

REV	BY	DATE	DESCRIPTION

DATE 02/09/26 | DRAWN JOA | CHECKED DMC

JOB NUMBER #26011R2

SHEET B21 OF B43

TYPE: PRESS BOX LAYOUT 12/14" RISE X 26/26" TREAD / 331'-6" (5/13 ROWS)

TITLE: PARLIER UNIFIED SCHOOL DISTRICT PARLIER HIGH SCHOOL PARLIER, CALIFORNIA

22" X 34" (11X17 = 1/2 indicated scale)

26011R2

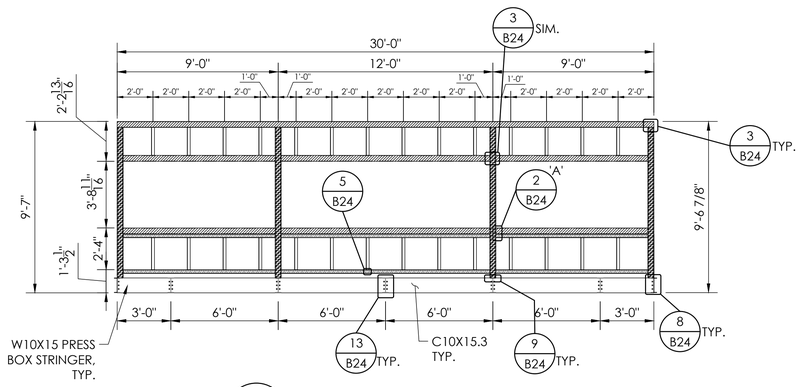

1 B22 **FRONT ELEVATION FRAMING**
SCALE: 1/4"=1'-0"

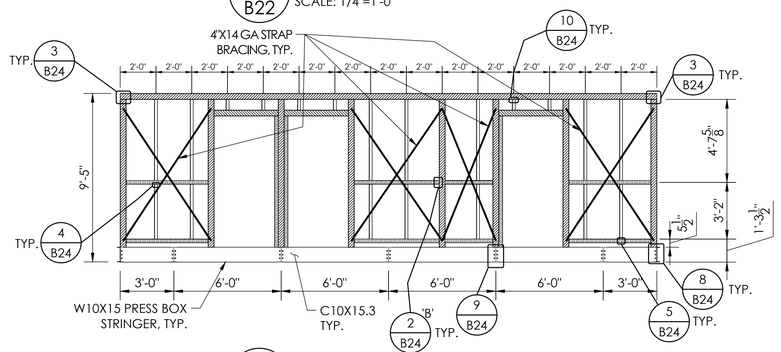

2 B22 **REAR ELEVATION FRAMING**
SCALE: 1/4"=1'-0"

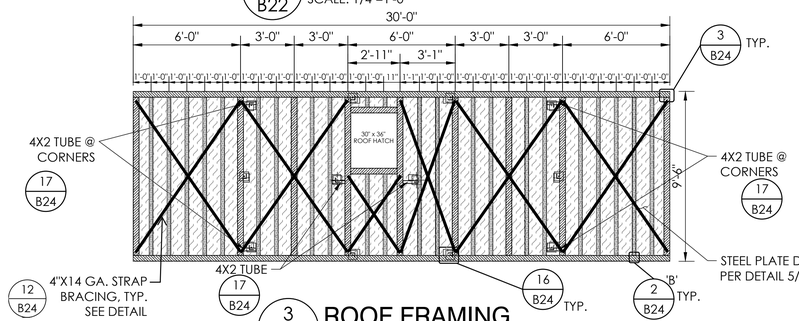

3 B22 **ROOF FRAMING**
SCALE: 1/4"=1'-0"

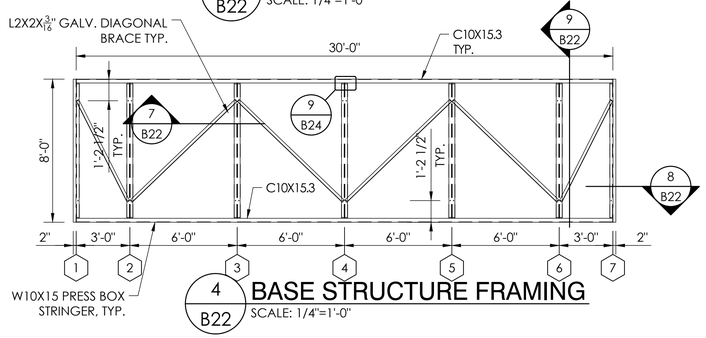

4 B22 **BASE STRUCTURE FRAMING**
SCALE: 1/4"=1'-0"

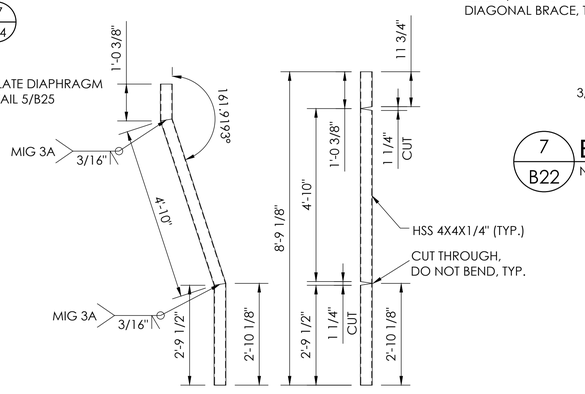

10 B22 **COLUMN SPLICE DETAIL WITH SHUTTERS**
SCALE:1/2"=1'-0"

STEEL KEY

- = HSS4X4X1/4 TUBING TYP.
- = 4" SQUARE X 11 GA. TUBING TYP.
- = 4X2 1/2X14 GA. CEE
- = 2 X 2 X 1/8" ANGLE
- = 4"X14 GA. STRAP BRACING, TYP. SEE DETAIL 12 B24

STEEL PROPERTIES

TUBE	4" SQUARE X 11 GA. TUBE	A500 GRADE B	Fy = 46ksi, MIN.
TUBE	HSS4X4X1/4"	A500 GRADE B	Fy = 46ksi, MIN.
TUBE	4" X 2" X 1/8" TUBE	A500 GRADE B	Fy = 46ksi, MIN.
DIAGONAL ANGLE	L2 X 2 X 3/16"	A572 / A529	Fy = 50ksi, MIN.
BELLY PAN ANGLE & WALL FRAMING	L2 X 2 X 1/8"	A572 / A529	Fy = 50ksi, MIN.
CEES	4 X 2 1/2 X 14 GA.	A1011 / A653	Fy = 55ksi, MIN.
FLAT STRAP	4" X 14 GA.	A1011 / A653	Fy = 55ksi, MIN.
ROOF PLATE	11GA. OR 1/8"	A1011 / A653 / A786	Fy = 27ksi, MIN.

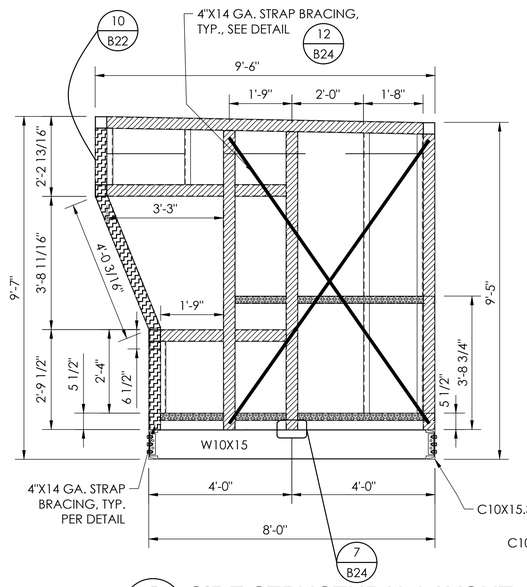

5 B22 **SIDE STRUCTURAL LAYOUT**
SCALE: 1/2"=1'-0" (RIGHT END)

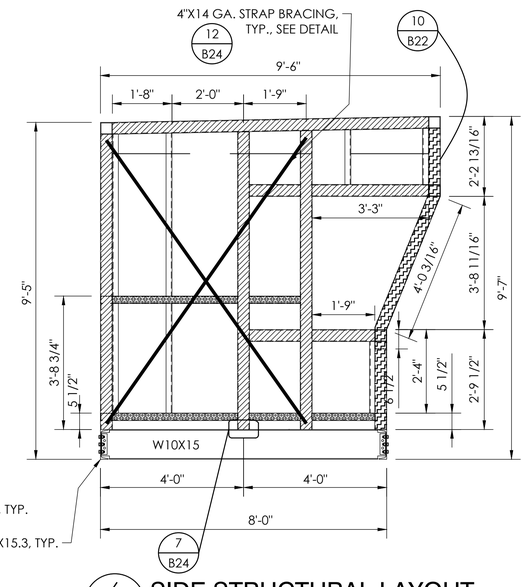

6 B22 **SIDE STRUCTURAL LAYOUT**
SCALE: 1/2"=1'-0" (LEFT END)

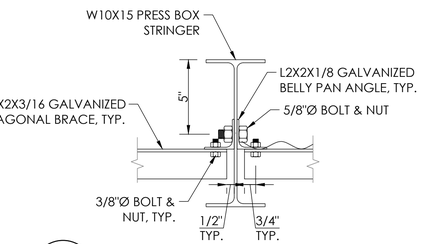

7 B22 **BELLY PAN ATTACHMENT**
NOT TO SCALE

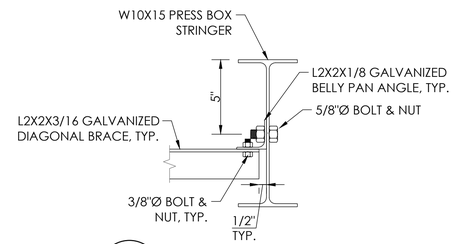

8 B22 **BELLY PAN ATTACHMENT**
NOT TO SCALE

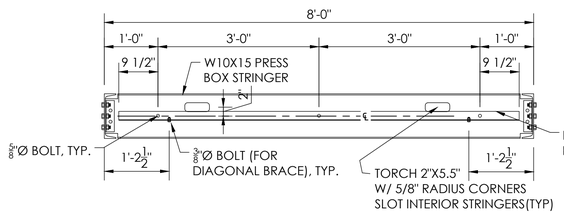

9 B22 **BELLY PAN ANGLE ATTACHMENT**
NOT TO SCALE

THIS DRAWING AND ALL INFORMATION THEREIN IS THE PROPERTY OF THE SOUTHERN BLEACHER COMPANY, MCD & SYKAN AND IS CONFIDENTIAL AND MUST NOT BE MADE PUBLIC OR COPIED. THIS DRAWING IS LOANED SUBJECT TO RE-TURN UPON DEMAND AND, IS NOT TO BE USED DIRECTLY OR INDIRECTLY IN ANY WAY DETRIMENTAL TO OUR INTERESTS.

STRUCTURAL ENGINEERS
TAYLOR & SYKAN
CONTACT: Phn: (626) 793-7438
OFFICE: Fax: (626) 793-7381
Email: Kevin@taylorsykan.com
http://www.taylorsykan.com
553 S. Oak Knoll Ave. Pasadena, CA 91101

Southern® BLEACHER COMPANY
GRANDSTANDS •BLEACHERS •STADIUMS
Established 1946
PO Box One, Graham, Texas 76450
801 Fifth Street Phone: 940-549-0733 Fax: 940-549-1365

REGISTERED PROFESSIONAL ENGINEER BRIAN T. DEAN S 6087 STRUCTURAL STATE OF CALIFORNIA
S&S 06/17/26
PRINCIPAL

REV	BY	DATE	DESCRIPTION

DATE 02/09/26 | DRAWN JOA | CHECKED DMC
JOB NUMBER #26011R2
SHEET B22 | OF B43

TYPE: PRESS BOX FRAMING PLAN
12/14" RISE X 26/26" TREAD / 331'-6" (5/13 ROWS)
TITLE: PARLIER UNIFIED SCHOOL DISTRICT
PARLIER HIGH SCHOOL
PARLIER, CALIFORNIA

22" X 34" (11x17 = 1/2 indicated scale)

26011R2

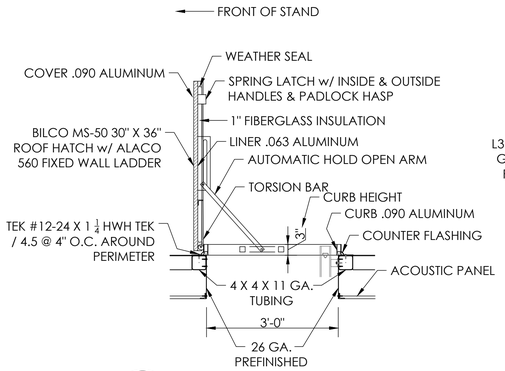

1 B23 ROOF HATCH DETAIL
NOT TO SCALE

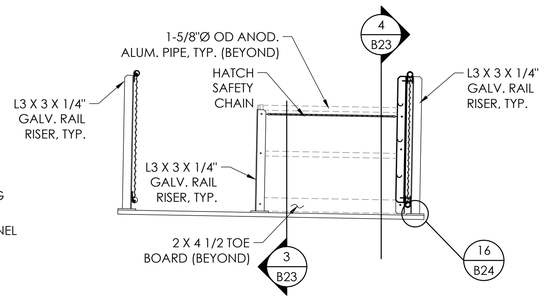

2 B23 HATCH SAFETY CHAIN & RAIL DETAIL
NOT TO SCALE

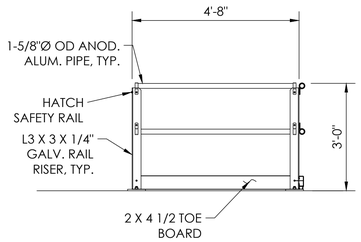

3 B23 SAFETY RAIL DETAIL
NOT TO SCALE

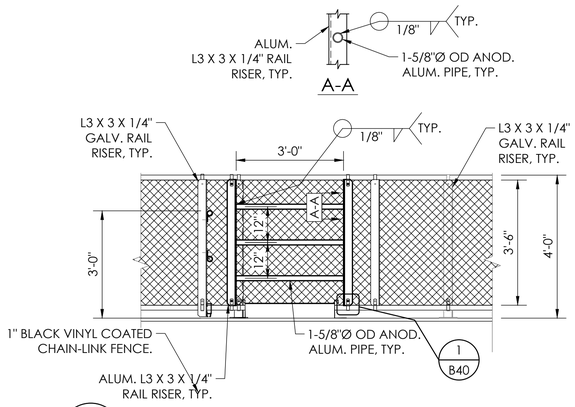

4 B23 ROOF HATCH ASSIST
NOT TO SCALE

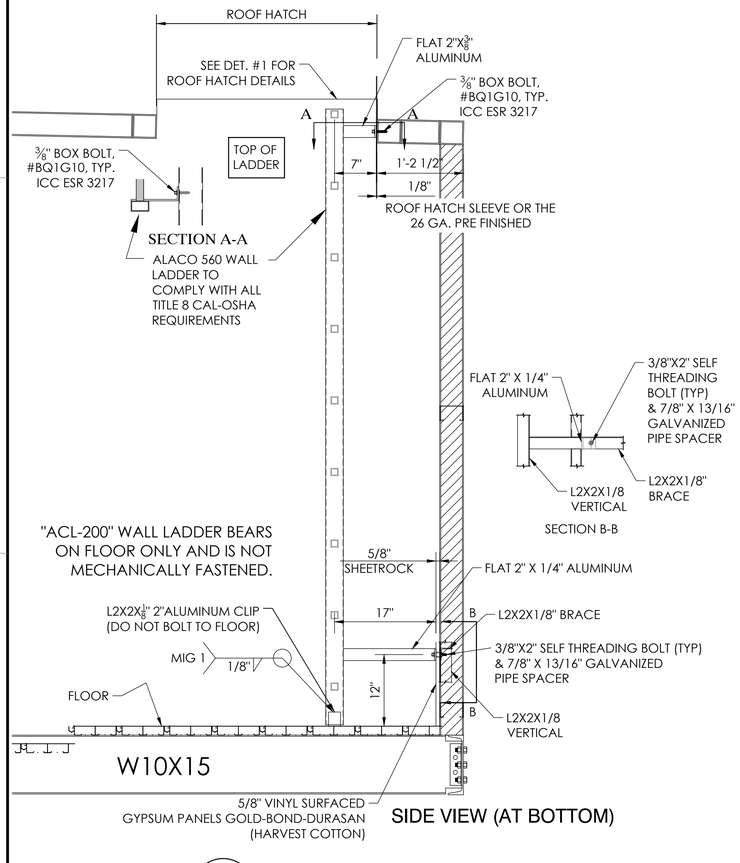

5 B23 LADDER CONNECTION DETAIL
NOT TO SCALE

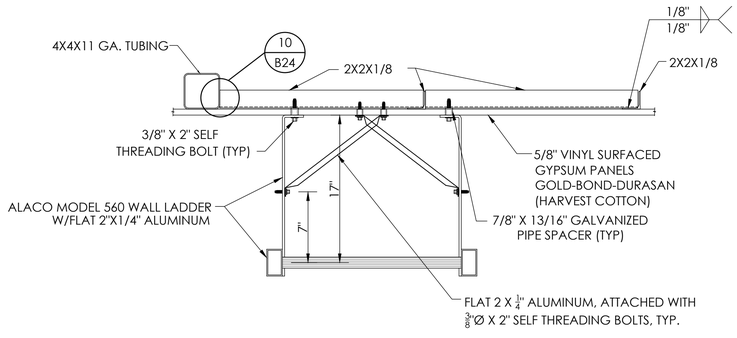

TOP VIEW (AT BOTTOM)

THIS DRAWING AND ALL INFORMATION THEREIN IS THE PROPERTY OF THE SOUTHERN BLEACHER COMPANY. IMOR § 9.9 AND IS CONFIDENTIAL AND MUST NOT BE COPIED. THIS DRAWING IS LOANED SUBJECT TO RE-TURN UPON DEMAND AND, IS NOT TO BE USED DIRECTLY OR INDIRECTLY IN ANY WAY DETRIMENTAL TO OUR INTERESTS.

STRUCTURAL ENGINEERS
TAYLOR & SYFAN
CONTACT: Scott Kelly
OFFICE: (626) 792-7458
FAX: (626) 792-3881
553 S. Oak Knoll Ave. Pasadena, CA 91101
http://www.tsmanet.com/
Southern®
BLEACHER COMPANY
GRANDSTANDS •BLEACHERS •STADIUMS
PO Box One, Graham, Texas 76450
801 Fifth Street Phone: 940/549-0733 Fax: 940/549-1365
Established 1946

REGISTERED PROFESSIONAL ENGINEER
BRIAN T. DEAN
S 6087
STRUCTURAL
STATE OF CALIFORNIA
S&S 06/17/26
PRINCIPAL

TYPE: PRESS BOX ROOF HATCH DETAILS
TITLE: 12/14" RISE X 26/26" TREAD / 331'-6" (5/13 ROWS)

PARLIER UNIFIED SCHOOL DISTRICT
PARLIER HIGH SCHOOL
PARLIER, CALIFORNIA

REV	BY	DATE	DESCRIPTION

DATE 02/09/26 | DRAWN JOA | CHECKED DMC

JOB NUMBER #26011R2

SHEET B23 | OF B43

22" X 34" (11x17 = 1/2 indicated scale)

26011R2

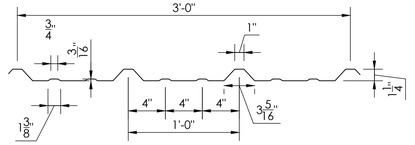

SECTION PROPERTIES								
			NEGATIVE BENDING			POSITIVE BENDING		
PANEL	Fy	WEIGHT	Ixe	Sxe	Maxo	Ixe	Sxe	Maxo
GAUGE	(KSI)	(PSF)	(IN.4/FT.)	(IN.3/FT.)	(KIP-IN.)	(IN.4/FT.)	(IN.3/FT.)	(KIP-IN.)
26	60*	0.94	0.0309	0.0449	1.8019	0.0382	0.0381	1.6759

*Fy IS 80 ksi REDUCED TO 60 ksi IN ACCORDANCE WITH THE 2020 EDITION OF THE NORTH AMERICAN SPECIFICATION FOR DESIGN OF COLD-FORMED STEEL STRUCTURAL MEMBERS. - A3.1.3

1 B24 **"R" PANEL DETAIL**
NOT TO SCALE

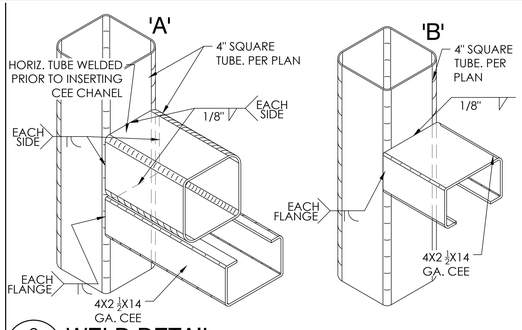

2 B24 **WELD DETAIL**
NOT TO SCALE

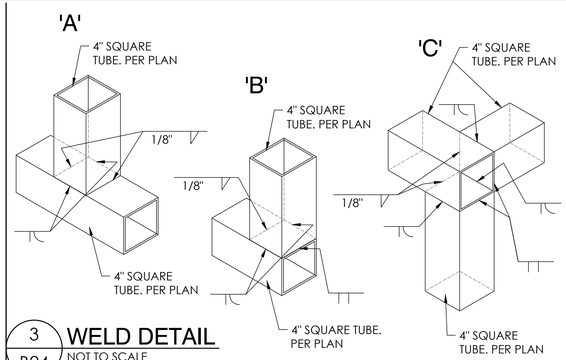

3 B24 **WELD DETAIL**
NOT TO SCALE

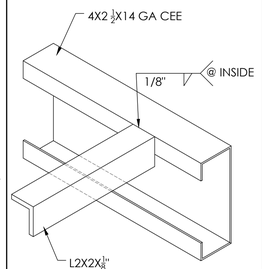

4 B24 **WELD DETAIL**
NOT TO SCALE

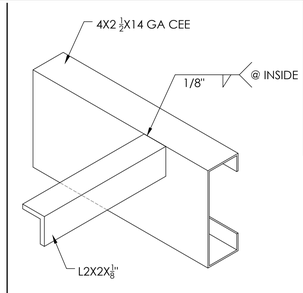

5 B24 **WELD DETAIL**
NOT TO SCALE

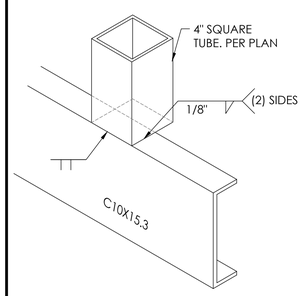

6 B24 **WELD DETAIL**
NOT TO SCALE

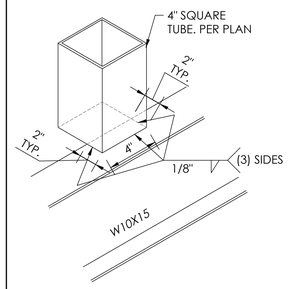

7 B24 **WELD DETAIL**
NOT TO SCALE

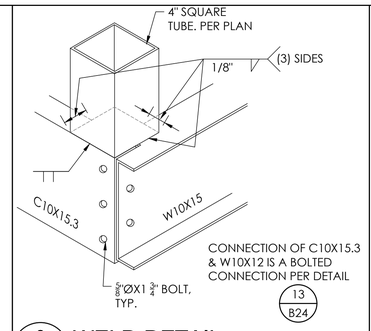

8 B24 **WELD DETAIL**
NOT TO SCALE

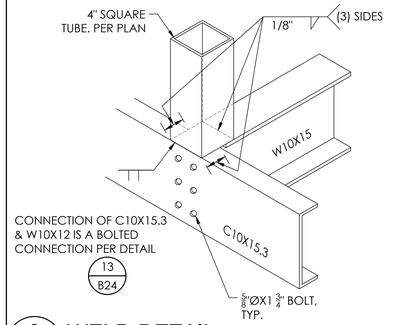

9 B24 **WELD DETAIL**
NOT TO SCALE

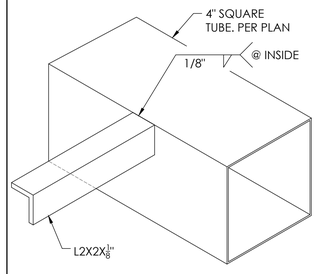

10 B24 **WELD DETAIL**
NOT TO SCALE

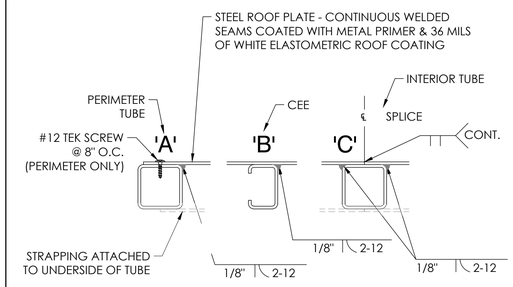

11 B24 **STEEL ROOF TO TUBING**
NOT TO SCALE

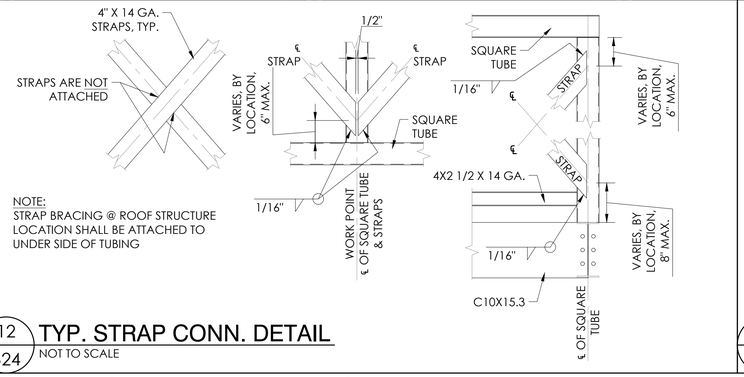

12 B24 **TYP. STRAP CONN. DETAIL**
NOT TO SCALE

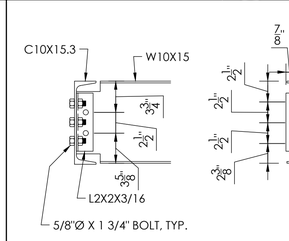

13 B24 **CHANNEL CONN. DETAIL**
NOT TO SCALE

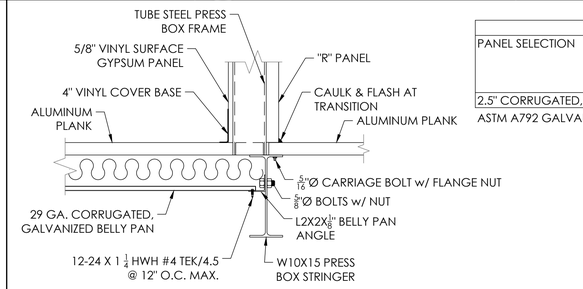

SECTION PROPERTIES							
PANEL SELECTION	WIDTH in.	YIELD ksi	WEIGHT psf	TOP IN COMPRESSION		BOTTOM IN COMPRESSION	
				Ixx (IN.4/FT.)	Sxx (IN.3/FT.)	Ixx (IN.4/FT.)	Sxx (IN.3/FT.)
2.5" CORRUGATED, 29 GA.	24	60	.62	0.0050	0.0191	0.0050	0.0185

ASTM A792 GALVALUME

14 B24 **LANDING TRANSITION DETAIL**
NOT TO SCALE

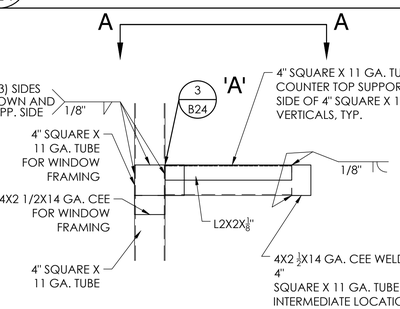

15 B24 **COUNTER TOP DETAIL**
NOT TO SCALE

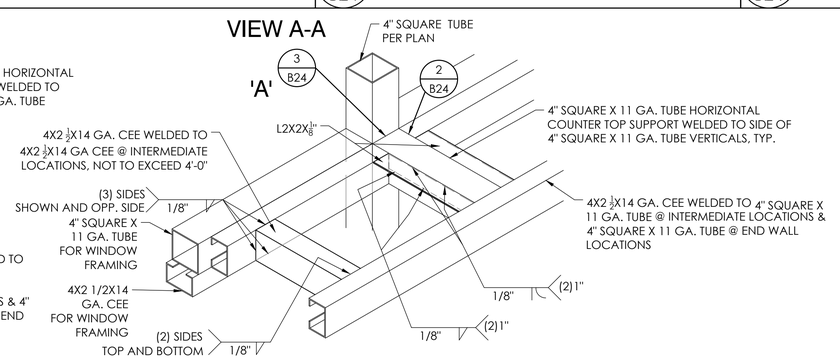

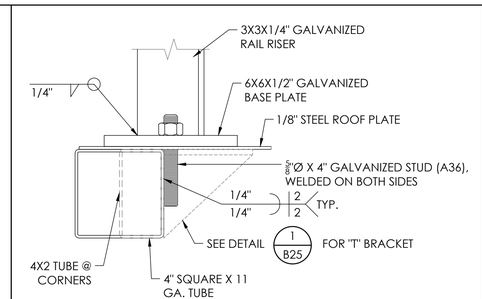

16 B24 **ROOF RAIL ATTACHMENT**
NOT TO SCALE

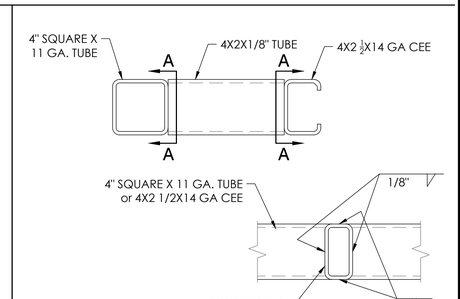

17 B24 **WELD DETAIL**
NOT TO SCALE

THIS DRAWING AND ALL INFORMATION THEREIN IS THE PROPERTY OF THE SOUTHERN BLEACHER COMPANY, MCD § 1714 IN ITS CONFIDENTIAL AND NOT TO BE MADE PUBLIC OR COPIED. THIS DRAWING IS LOANED SUBJECT TO RE-TURN UPON DEMAND AND, IS NOT TO BE USED DIRECTLY OR INDIRECTLY IN ANY WAY DETRIMENTAL TO OUR INTERESTS.

STRUCTURAL ENGINEERS
553 S. Oak Knoll Ave. Pasadena, CA 91101
CONTACT: Eric Carroll
PHONE: (626) 792-7458
FAX: (626) 792-3881
http://www.rcmanuel.com/

TAYLOR & YEAH
Southern® BLEACHER COMPANY
GRANDSTANDS •BLEACHERS •STADIUMS
Established 1946
PO Box One, Graham, Texas 76450
801 Fifth Street Phone: 940-549-0733 Fax: 940-549-1365

REGISTERED PROFESSIONAL ENGINEER BRIAN T. DEAN S 6087 STRUCTURAL STATE OF CALIFORNIA
S&S 06/17/26
PRINCIPAL

PRESS BOX DETAILS
12/14" RISE X 26/26" TREAD / 331'-6" (5/13 ROWS)

PARLIER UNIFIED SCHOOL DISTRICT
PARLIER HIGH SCHOOL
PARLIER, CALIFORNIA

REV	BY	DATE	DESCRIPTION

DATE 02/09/26 | DRAWN JOA | CHECKED DMC
JOB NUMBER #26011R2
SHEET B24 | OF B43

22" X 34" (1:1x17 = 1/2 indicated scale)

26011R2

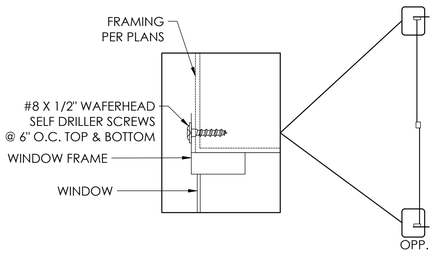

1 B24.1 **WINDOW INSTALLATION**
NOT TO SCALE

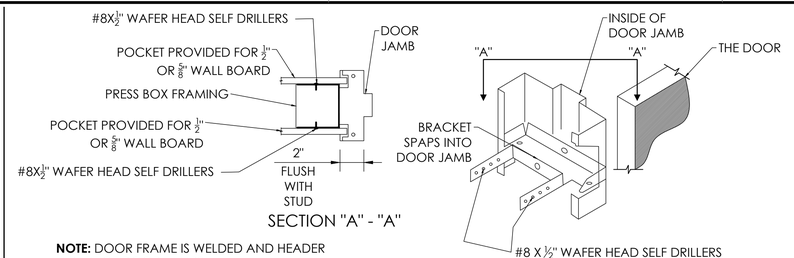

NOTE: DOOR FRAME IS WELDED AND HEADER IS PART OF DOOR JAMBS.

#8 X ½" WAFER HEAD SELF DRILLERS
(4) EACH SIDE OF JAMB
(2) LOCATED 1-½" - 2-½" ABOVE TOP HINGE & BOTTOM HINGE EACH SIDE.
(2) EQUALLY SPACED BETWEEN ABOVE TWO
(1) SCREW EACH SIDE @ EACH LOCATION

2 B24.1 **DOOR JAMB INSTALLATION DETAIL**
NOT TO SCALE

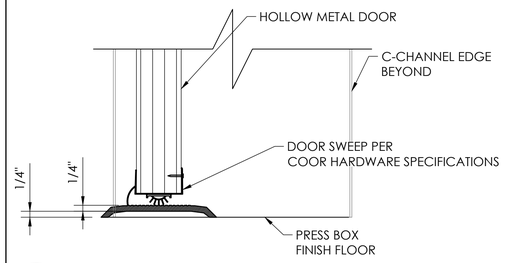

3 B24.1 **HOLLOW METAL DOOR SILL**
NOT TO SCALE

THIS DRAWING AND ALL INFORMATION THEREIN IS THE PROPERTY OF THE SOUTHERN BLEACHER COMPANY, MOB.§ 19.44 AND IS CONFIDENTIAL AND MUST NOT BE MADE PUBLIC OR COPIED. THIS DRAWING IS LOANED SUBJECT TO RE-TURN UPON DEMAND AND, IS NOT TO BE USED DIRECTLY OR INDIRECTLY IN ANY WAY DETRIMENTAL TO OUR INTERESTS.

STRUCTURAL ENGINEERS
TAYLOR & SYFAN
CENTRAL OFFICE
Ph: (626) 793-7438
Fax: (626) 793-3881
553 S. Oak Knoll Ave. Pasadena, CA 91101
http://www.tsstructural.com/

Southern® BLEACHER COMPANY
GRANDSTANDS •BLEACHERS •STADIUMS
PO Box One, Graham, Texas 76450
801 Fifth Street
Phone: 940-549-0733 Fax: 940-549-1368
Established 1946

REGISTERED PROFESSIONAL ENGINEER
BRIAN T. DEAKEN
S 6087
STRUCTURAL
STATE OF CALIFORNIA
S&S
06/17/26
PRINCIPAL

TYPE: PRESS BOX DETAILS
12/14" RISE X 26/26" TREAD / 331'-6" (5/13 ROWS)

TITLE:
PARLIER UNIFIED SCHOOL DISTRICT
PARLIER HIGH SCHOOL
PARLIER, CALIFORNIA

REV	BY	DATE	DESCRIPTION

DATE	DRAWN	CHECKED
02/09/26	JOA	DMC

JOB NUMBER
#26011R2

SHEET	OF
B24.1	**B43**

22" X 34" (1:1x17 = 1/2 indicated scale)

26011R2

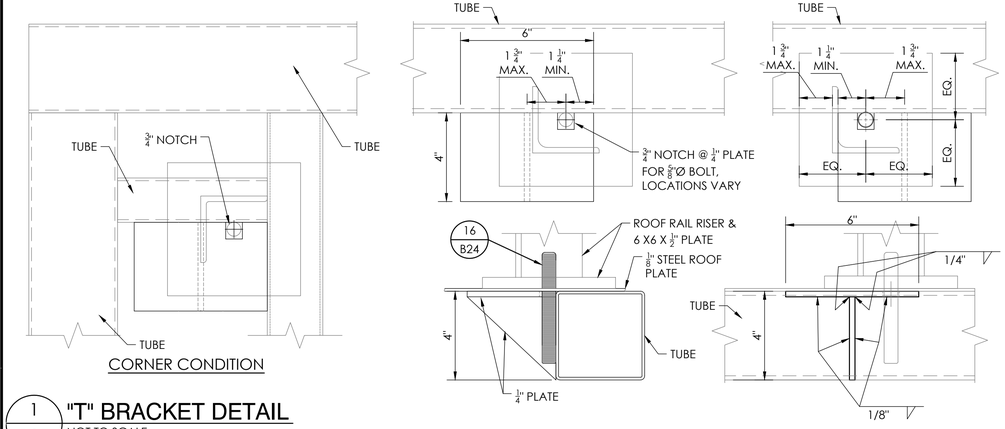

1 B25 "T" BRACKET DETAIL
NOT TO SCALE

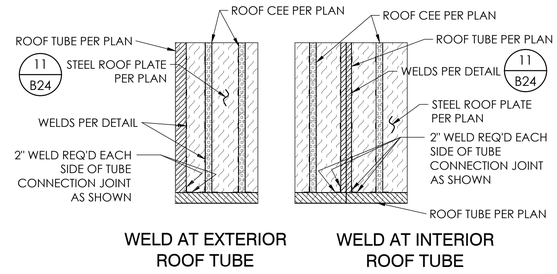

WELD AT EXTERIOR ROOF TUBE

WELD AT INTERIOR ROOF TUBE

5 B25 ROOF PLATE WELDING
NOT TO SCALE

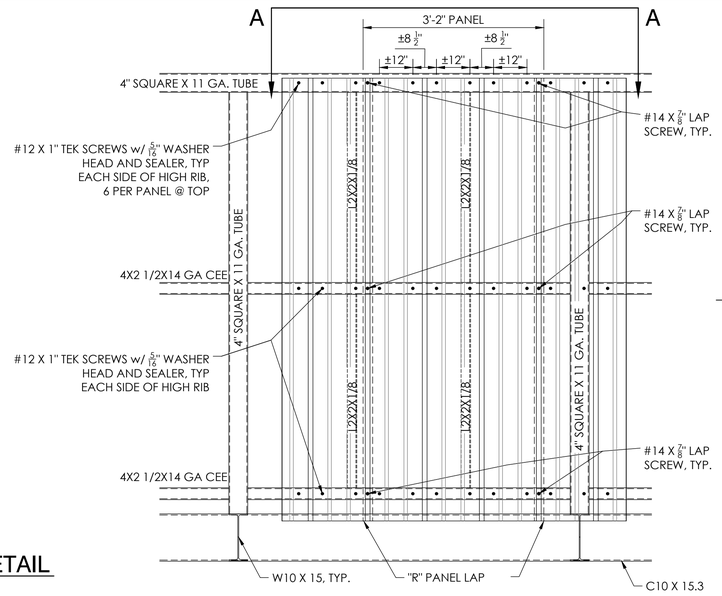

6 B25 "R" PANEL ATTACHMENT DETAIL
NOT TO SCALE

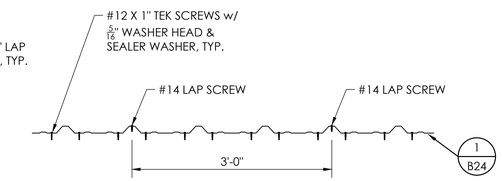

SECTION A-A

THIS DRAWING AND ALL INFORMATION THEREIN IS THE PROPERTY OF THE SOUTHERN BLEACHER COMPANY, TAYLOR & SYFAN AND IS CONFIDENTIAL AND MUST NOT BE MADE PUBLIC OR COPIED. THIS DRAWING IS LOANED SUBJECT TO RE-TURN UPON DEMAND AND, IS NOT TO BE USED DIRECTLY OR INDIRECTLY IN ANY WAY DETRIMENTAL TO OUR INTERESTS.

STRUCTURAL ENGINEERS
CENTRAL COAST OFFICE
Ph: (626) 793-7438
Fax: (626) 793-7439
Tel: (800) 379-3881
553 S. Oak Knoll Ave. Pasadena, CA 91101
http://www.structural.com/
TAYLOR & SYFAN
Southern® BLEACHER COMPANY
GRANDSTANDS •BLEACHERS •STADIUMS
PO Box One, Graham, Texas 76450
801 Fifth Street
Phone: 940/549-0733 Fax: 940/549-1365
Established 1946

REGISTERED PROFESSIONAL ENGINEER
BRIAN T. DEAN
S 6087
STRUCTURAL
STATE OF CALIFORNIA
S&S 06/17/26
PRINCIPAL

TYPE: PRESS BOX DETAILS
12/14" RISE X 26/26" TREAD / 331'-6" (5/13 ROWS)

TITLE: PARLIER UNIFIED SCHOOL DISTRICT
PARLIER HIGH SCHOOL
PARLIER, CALIFORNIA

REV	BY	DATE	DESCRIPTION

DATE	DRAWN	CHECKED
02/09/26	JOA	DMC

JOB NUMBER #26011R2

SHEET B25 OF B43

22" X 34" (11x17 = 1/2 indicated scale)

26011R2

1.8 SERVICES WITHIN THE CEILING:

1.8.1 ALL FLEXIBLE SPRINKLER HOSE FITTINGS, CEILING-MOUNTED AIR TERMINALS OR OTHER SERVICES SHALL BE POSITIVELY ATTACHED TO THE CEILING SUSPENSION SYSTEMS BY MECHANICAL MEANS TO RESIST A HORIZONTAL FORCE EQUAL TO THE WEIGHT OF THE COMPONENT. SCREWS OR APPROVED FASTENERS ARE REQUIRED. A MINIMUM OF TWO ATTACHMENTS ARE REQUIRED AT EACH COMPONENT.

1.8.2 FLEXIBLE SPRINKLER HOSE FITTINGS, CEILING-MOUNTED AIR TERMINALS OR OTHER SERVICES WEIGHING LESS THAN OR EQUAL TO 20 lbs. SHALL HAVE (1) #12 GAGE SLACK SAFETY WIRE ATTACHED TO THE TERMINAL OR SERVICE TO THE STRUCTURE ABOVE.

1.8.3 FLEXIBLE SPRINKLER HOSE FITTINGS, CEILING-MOUNTED AIR TERMINALS OR OTHER SERVICES WEIGHING MORE THAN 20 lbs. SHALL BE SUPPORTED INDEPENDENTLY FROM THE STRUCTURE ABOVE BUT IF LESS THAN OR EQUAL TO 56 lbs SHALL HAVE TWO (2) #12 GAUGE SLACK SAFETY WIRES AT DIAGONAL CORNERS ATTACHED TO THE TERMINAL OR SERVICE AND TO THE STRUCTURE ABOVE.

1.8.4 FLEXIBLE SPRINKLER HOSE FITTINGS, CEILING MOUNTED AIR TERMINALS OR OTHER SERVICES WEIGHING MORE THAN 56 lbs. SHALL BE INDEPENDENTLY SUPPORTED DIRECTLY FROM THE STRUCTURE ABOVE BY NOT LESS THAN FOUR (4) TAUT #12 GAUGE WIRES ATTACHED TO THE TERMINAL OR SERVICE AND TO THE STRUCTURE ABOVE.

1.9 OTHER DEVISES WITHIN THE CEILING:

MISCELLANEOUS LIGHTWEIGHT DEVICES WEIGHING 20 POUNDS OR LESS, SUCH AS STROBE LIGHTS, OCCUPANCY SENSORS, SPEAKERS, EXIT SIGNS, ETC., SHALL BE ATTACHED TO THE CEILING GRID PER SECTION 1.8.1 ABOVE. IN ADDITION, DEVICES WEIGHING MORE THAN 10 POUNDS SHALL HAVE ONE #12-GAUGE SLACK SAFETY WIRE ANCHORED TO THE STRUCTURE ABOVE PER SECTION 1.8.2 ABOVE.

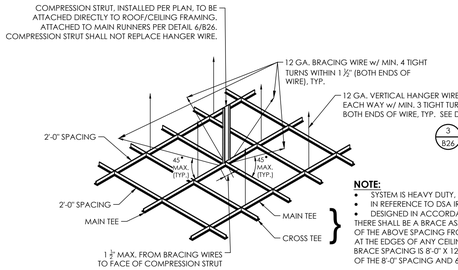

NOTE:
BRACING NOT TO BE MORE THAN 12'-0" BY 12'-0" O.C.

NOTE:
- SYSTEM IS HEAVY DUTY, COMPLIES w/ ASCE7
- IN REFERENCE TO DSA IR A-5,
- DESIGNED IN ACCORDANCE w/ IR 25-2.19 (REVISED 03/18/22)

THERE SHALL BE A BRACE ASSEMBLY A DISTANCE OF NOT MORE THAN ONE HALF OF THE ABOVE SPACING FROM EACH SURROUNDS WALL, EXPANSION JOINT AND AT THE EDGES OF ANY CEILING VERTICAL OFFSET. FOR EXAMPLE: WHERE THE BRACE SPACING IS 8'-0" X 12'-0", THE DISTANCE SHALL BE 4'-0" IN THE DIRECTION OF THE 8'-0" SPACING AND 6'-0" IN THE DIRECTION OF THE 12'-0" SPACING.

2 / B26 SUSPENDED CEILING BRACING ASSEMBLY
NOT TO SCALE

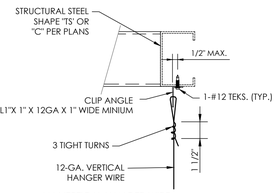

(A) VERTICAL HANGER WIRE ATTACHMENT

3 / B26 VERTICAL HANGER WIRE ATTACHMENT
NOT TO SCALE

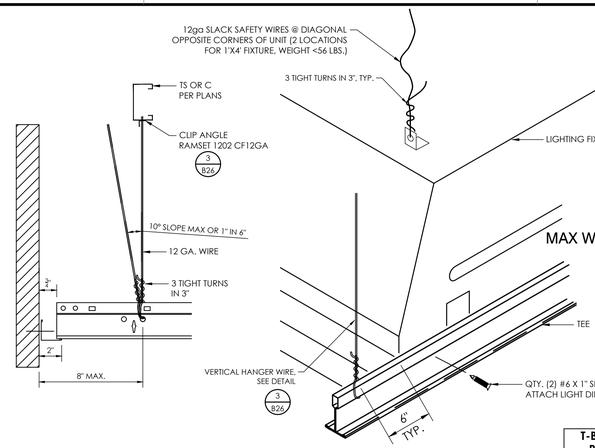

5 / B26 ISOMETRIC VIEW OF LIGHT FIXTURE @ RUNNER
NOT TO SCALE

T-BAR ACOUSTICAL CEILING PANEL SYSTEM SCHEDULE

HEAVY DUTY / ASTM CLASS / FIRE RATED

USG BRANDS: ICC-ES ESR-1222

USG - DXL-26 HD/FR (12' MAINS)
USG - DXL-424 FR (4' CROSS T's)
USG - DXL-216 FR (2' CROSS T's)
M7HD 12' ANGLES 7/8 (ALTERNATE)
DXF - DXF-129 (1' CROSS T's)
2" WALL ANGLE

ARMSTRONGS BRAND: ICC-ES ESR-1308

PRELUDE FIRE GUARD
8301 12' MAINS
XL8341 4' CROSS T's
XL8323 2' CROSS T's
XL8313 1' CROSS T's
(DC7301) 7/8" ANGLE HD (ALTERNATE)
2" WALL ANGLE

NOTE:
RUNNER MUST HAVE AN INTEGRAL SPLICE JOINT WHEN JOINED WITH ADJACENT RUNNERS.

TYPICAL DESIGN WHEN USING 2" ANGLE HORIZONTAL SPREADER STRUT

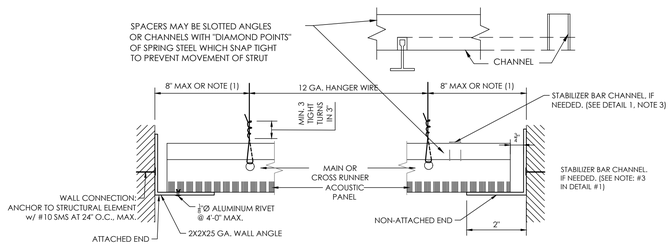

"FIXED" END **"FREE" END**

NOTE:
(1) 8" FROM WALL OR ¼ OF THE LENGTH OF THE END RUNNER, WHICHEVER IS LESS, WHEN RUNNER EXCEEDS 8"

4 / B26 MAIN OR CROSS RUNNER DETAIL
NOT TO SCALE

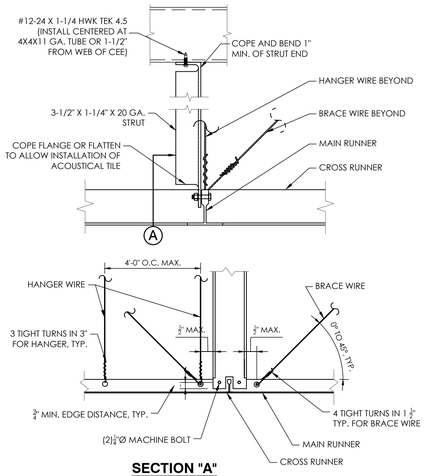

SECTION "A"

6 / B26 COMPRESSION STRUT DETAIL
NOT TO SCALE

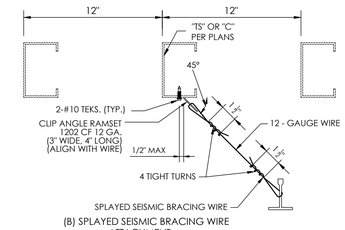

(B) SPLAYED SEISMIC BRACING WIRE ATTACHMENT

7 / B26 SPLAYED SEISMIC BRACING WIRE ATTACHMENT
NOT TO SCALE

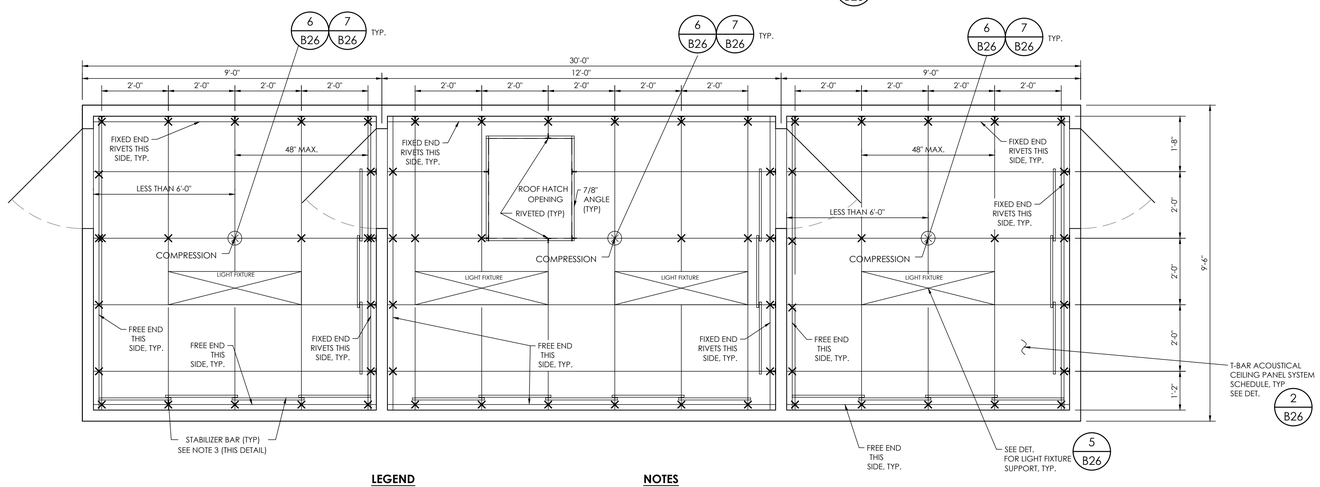

1 / B26 REFLECTED CEILING PLAN
NOT TO SCALE

LEGEND

- **12-GAUGE HANGER WIRE** (SEE DETAIL 2 AND NOTE #2, RIGHT)
- **LATERAL BRACING LOCATION** (USE WHEN CEILING EXCEEDS 12'-0" X 12'-0" AND ARE DIRECTLY ATTACHED TO ROOF FRAMING)
- **RIVITED**

NOTES

1. WALLS SHALL BE ATTACHED WITH ⅜" RIVETS ADJACENT WALL SHALL REST ON 2" WALL ANGLE (4/B26)
2. ADDITIONAL HANGER WIRES ARE REQUIRED AT ALL WALLS, 8" MAX DISTANCE FROM WALL OR 1/4 DISTANCES THE LENGTH OF THE MEMBER, WHICHEVER IS SHORTER. HANGER MAY BE OMITTED WHEN GRID MEMBERS ARE 8" OR LESS. (4/B26)
3. INTERCONNECTION BETWEEN THE RUNNERS AT WALL WHEN RUNNER EXCEEDS 12" @ UNATTACHED WALLS (TYP. DESIGN). OMIT SPACERS WHEN SEISMIC CLIPS ARE USED. (1/B26)
4. COMPRESSION STRUT AND BRACING OCCURS AT LOCATIONS NOTED IN DETAIL AND WHERE SHOWN ON CEILING PLAN.

NOTE: ALL SUSPENSION SYSTEM WORK TO COMPLY WITH ASTM C636 AND SECTION 5.2 OF ASTM E580.

THIS DRAWING AND ALL INFORMATION THEREIN IS THE PROPERTY OF THE SOUTHERN BLEACHER COMPANY, MOBILE, ALABAMA AND IS CONFIDENTIAL AND MUST NOT BE COPIED. THIS DRAWING IS LOANED SUBJECT TO RE-TURN UPON DEMAND AND, IS NOT TO BE USED DIRECTLY OR INDIRECTLY IN ANY WAY DETRIMENTAL TO OUR INTERESTS.

STRUCTURAL ENGINEERS
TAYLOR & YEAH
CONTACT: Ph: (626) 793-7438
DAVID C. YEAH Fax: (626) 793-7381
http://www.taylorandyeah.com/
553 S. Oak Knoll Ave. Pasadena, CA 91101

Southern® BLEACHER COMPANY
GRANDSTANDS • BLEACHERS • STADIUMS
Established 1946
PO Box One, Graham, Texas 76450
801 Fifth Street Phone: 940-549-0733 Fax: 940-549-1365

REGISTERED PROFESSIONAL ENGINEER BRIAN T. DEAVER S 6087 STRUCTURAL STATE OF CALIFORNIA
S&S 06/17/26
PRINCIPAL

TYPE: PRESS BOX CEILING DETAILS
SIZE: 12/14" RISE X 26/26" TREAD / 331'-6" (5/13 ROWS)

PARLIER UNIFIED SCHOOL DISTRICT
PARLIER HIGH SCHOOL
PARLIER, CALIFORNIA

REV	BY	DESCRIPTION	DATE

DATE 02/09/26 | DRAWN JOA | CHECKED DMC
JOB NUMBER #26011R2
SHEET B26 | OF B43

22" X 34" (1 1x17 = 1/2 indicated scale)

26011R2

A.1 STEEL STRUCTURAL SYSTEM

	ENGINEERED PER:
4" X 4" X 1/8" (11 GA.) SQUARE TUBING	ASTM A500 GRADE 'B' 46ksi
2" X 2" X 1/8" ANGLE	ASTM A572 GRADE 50
WIDE FLANGE BEAM	ASTM A992 Fy=50ksi
CHANNEL	ASTM A572 GRADE 50
1/8" ROOF PLATE	ASTM A653 A786 Fy=27ksi
4" X 2" 14-GAUGE CEE	ASTM A1011 Fy=55ksi
PLATE UP TO 1/2" THICK	ASTM A36
11 GA STRAPS AND CEES WELDS: TYPE ER70S-6 WIRE MIG	A 1011 / A653 Fy=55ksi, min
4" X 4" X 1/4" HSS	ASTM A500 GRADE 'B' 46ksi
4" PUNCHED CEE STUD 3-5/8" UN-PUNCHED DEEP LEG TRACK 4" UN-PUNCHED DEEP LEG TRACK	25 GA. - ASTM C645-04 20 GA. CW - ASTM C645-04 20 GA. STRUCT. - ASTM C955-03 18 GA. STRUCT. - ASTM C955-03 25 GA. - ASTM C645-04 20 GA. CW - ASTM C645-04 20 GA. STRUCT. - ASTM C955-04 18 GA. STRUCT. - ASTM C955-04

A.2 SIDING/ACCESSORIES

	(MFG. COLOR DESIGNATION)
26-GA. (0.0181") MBCI PBR PANEL	ASTM A792-03, A924-04, AZ50, AZ55 NON-COMBUSTIBLE, CLASS A Fy=60ksi, Fu=61.5KSI
#14 X 7/8" LAP SCREWS	
SCREWS-METAL TO METAL #12 - 1" W/ 5/16" WASHER HEAD & WASHER	
PANEL CLOSURES STRIPS	(MFG. COLOR DESIGNATION)
26-GA. FLAT	ASTM A792-03, A924-04, AZ50, AZ55 NON-COMBUSTIBLE, CLASS A
SEALANT, DEGUSSA, SONOLASTIC NP1, ONE-COMPONENT ELASTOMERIC, GUN-GRADE POLYURETHANE SEALANT	UL = TYPE II / CLASS I

A.3 WINDOWS

WINDOW, SINGLE SERIES 8200 SINGLE HUNG - U FACTOR .420 THERMALLY BROKEN ALUMINUM BY DON YOUNG COMPANY TEMPERED GLASS BY CARDINAL IG, UNLIMITED IN SIZE	AAMA / NWWDA 101 / I.S.2. RATED H-C30 54X90 SGCC #2328, LAB ID #550

A.4 ELECTRICAL SPECIAL NOTE: ALL ELECTRICAL COMPONENTS SHALL BE APPROVED PER NEC AND UL /CSA LISTED.

A.4.1 BREAKER PANEL

_LUG_AMP PANEL W/ MAIN DISCONNECT	UL LISTED EQUAL TO HOMELINE, GE, WESTINGHOUSE LOAD CENTERS BEARING A UL LABEL SIZED PER DRAWINGS
FLUSH MOUNT BREAKER COVER	UL LISTED EQUAL TO HOMELINE, GE, WESTINGHOUSE LOAD CENTERS BEARING A UL LABEL SIZED PER DRAWINGS
20 AMP SINGLE POLE BREAKERS	UL LISTED EQUAL TO HOMELINE, GE, WESTINGHOUSE LOAD CENTERS BEARING A UL LABEL SIZED PER DRAWINGS
DOUBLE POLE BREAKERS	UL LISTED EQUAL TO HOMELINE, GE, WESTINGHOUSE LOAD CENTERS BEARING A UL LABEL SIZED PER DRAWINGS

A.4.2 J-BOXES

4" X 4" X 2-1/8" - 1/2 & 3/4 KO-RACO #235 OR #4SDVB-SPL-PL W/FLANGE	UL LISTED, EQUAL TO RACO, BOWERS, STEEL CITY
4" X 4" X 1-1/2" - 1/2 & 3/4 KO-RACO #196 OR #4SDVB-SPL-PL W/FLANGE	UL LISTED, EQUAL TO RACO, BOWERS, STEEL CITY
4" X 4" X 1-1/2" METAL BOXES W/ 1/2", 3/4" KO, RACO #192 OR #4S-SPL-DR	UL LISTED, EQUAL TO RACO, BOWERS, STEEL CITY
4" X 4" X 2-1/8" METAL BOXES RACO #232 OR #4SD-SPL	UL LISTED, EQUAL TO RACO, BOWERS, STEEL CITY
PLASTER RINGS, 1 GANG, RACO #768 OR #8468C	UL LISTED, EQUAL TO RACO, BOWERS, STEEL CITY
PLASTER RINGS, 2 GANG, RACO #769 OR #8470A	UL LISTED, EQUAL TO RACO, BOWERS, STEEL CITY
WEATHER TIGHT, 1 GANG BOX #21H4-2	UL LISTED, EQUAL TO RACO, BOWERS, STEEL CITY
EXTENSION RINGS, RACO #187 OR #4SSBESPL	UL LISTED, EQUAL TO RACO, BOWERS, STEEL CITY

A.4.3 CONDUIT

EMT CONDUIT	UL LISTED, EQUAL TO RACO, ALLIED, BOWERS APPROVED PER NEC
FLEXIBLE METAL CONDUIT (FMC)	UL LISTED, EQUAL TO RACO, ALLIED, BOWERS APPROVED PER NEC

A.4.4 CONNECTORS

S.S. EMT CONNECTOR	UL LISTED, EQUAL TO RACO, BOWERS, STEEL CITY, NEER, APPROVED PER NEC
3/4" S.S. EMT CONNECTOR TC-502	UL LISTED, EQUAL TO RACO, BOWERS, STEEL CITY, NEER, APPROVED PER NEC
1/2" S.S. EMT CONNECTOR TC-501	UL LISTED, EQUAL TO RACO, BOWERS, STEEL CITY, NEER, APPROVED PER NEC
1/2" FLEX CONNECTOR SC50	UL LISTED, EQUAL TO RACO, BOWERS, STEEL CITY, NEER, APPROVED PER NEC
3/4" FLEX CONNECTOR SC75	UL LISTED, EQUAL TO RACO, BOWERS, STEEL CITY, NEER, APPROVED PER NEC
1/2" FLEX COUPLING, RACO #2272	UL LISTED, EQUAL TO RACO, BOWERS, STEEL CITY, NEER, APPROVED PER NEC
1/2" FLEX COUPLING, RACO #2273	UL LISTED, EQUAL TO RACO, BOWERS, STEEL CITY, NEER, APPROVED PER NEC
1/2" FLEX TO ½" EMT COUPLING NEE EFC-75	UL LISTED, EQUAL TO RACO, BOWERS, STEEL CITY, NEER, APPROVED PER NEC
1/2" EMT COUPLINGS	UL LISTED, EQUAL TO RACO, BOWERS, STEEL CITY, NEER, APPROVED PER NEC
1/2" EMT OFF-SET CONNECTORS, NEE #TN-50	UL LISTED, EQUAL TO RACO, BOWERS, STEEL CITY, NEER, APPROVED PER NEC

A.4.5 RECEPTACLES - SWITCHES

DUPLEX RCPT-LIGHT ALMOND 20A, 120V P&S 26352-LA 20A 5-20R	UL LISTED, APPROVED PER NEC
DUPLEX RCPT-LIGHT ALMOND-WR-GFCI, 20A, 120V P&S 2097TRWRLA GFCI	UL LISTED, APPROVED PER NEC
SINGLE POLE DECORATOR SWITCH LIGHT ALMOND P&S #TM870LA, 15A, 120V OR EQUAL	UL LISTED, APPROVED PER NEC
3-WAY DECORATOR SWITCH LIGHT ALMOND P&S #TM873LA, 15A, 120V OR EQUAL	UL LISTED, APPROVED PER NEC
OCCUPANCY SENSOR DECORATOR SWITCH - 15A, 120V, W/ MANUAL ON/OFF SINGLE POLE LIGHT ALMOND - P&S RWU600BICC4 3-WAY LIGHT ALMOND - P&S RW3U600I OR EQUAL	UL LISTED, APPROVED PER NEC

A.4.6 COVER PLATES

SWITCH COVER-LIGHT ALMOND #2132V	UL LISTED, EQUAL TO LEVITON, HUBBELL, P&S
PLUG COVER-LIGHT ALMOND #2134V	UL LISTED, EQUAL TO LEVITON, HUBBELL, P&S
BLANK METAL COVER-1 GANG.-LEV #84014	UL LISTED, EQUAL TO LEVITON, HUBBELL, P&S
PLUG COVER-SURFACE, RACO #902 OR #8365N	UL LISTED, EQUAL TO RACO, BOWERS, STEEL CITY
FLAT COVER PLATE-SURFACE, RACO #752 OR #8465	UL LISTED, EQUAL TO RACO, BOWERS, STEEL CITY APPROVED PER NEC
WEATHER TIGHT COVER-PLUGS-1GANG #2CCD	UL LISTED, EQUAL TO RED DOT

A.4.7 LIGHTS

1'X4' LED TROFFER LITHONIA LIGHTING GTL4 3700LM LP840 DRIVER INFO: CONSTANT CURRENT, CLASS 2, 4 CHANNEL W/ 0-10V DIMMING. 120-277VAC 0.29A @ 120V. INPUT WATTS: 35W	UL LISTED & LABELED PER MANUFACTURER IESNA LM-79 AND LM-80 TESTED D.O.E. "LIGHTING FACTS" LABEL DESIGN LIGHTS CONSORTIUM (DLC) LISTED. DLC PRODUCT CODE: P76QGDBU
LED INFO: 30W-4000K-81CRI-3451 LUMENS-3745 L-70 LIFESPAN: 75,000 HR	IES LM-80 AND TM-21
ASTRALITE EEU-3-RW 7 WATT LED COMBO EXIT/EMERGENCY LIGHT 120/277V. (2) FULLY ADJUSTABLE LIGHTING HEADS 90 MIN. BATTERY BACK-UP	DAMP LOCATION LISTED U.L. 924 ETL LISTED
PROFESSIONAL GRADE VINYL ELECTRICAL TAPE SCOTCH 3M	UL LISTED 539H INSULATING TAPE FLAME RETARDANT

A.4.8 WIRE & MISC.

12 AWG-600V-THHN-THWN-COPPER/SOLID	UL LISTED, EQUAL TO GENERAL CABLE CORP.
IDEAL INDUSTRIES IN SURE PUSH-IN CONNECTORS MOD. 32/33/34	UL LISTED, CSA CERTIFIED, 105°C 600V. RATED (1000V. IN SIGNS & LIGHT FIXTURES)
IDEAL INDUSTRIES B-CAP WIRE NUTS OR EQUAL	UL LISTED, CSA CERTIFIED, 105°C 600V. RATED
REDUCING WASHERS	UL LISTED, EQUAL TO RACO, BOWERS, STEEL CITY
3/4" STRAPS FOR EMT-RACO #2083 OR #MED45	UL LISTED, EQUAL TO RACO, BOWERS, STEEL CITY
STRAPS FOR FLEX	UL LISTED, EQUAL TO RACO, BOWERS, STEEL CITY
CONDUIT BUSHINGS	
J-BOX PLUGS SNAP IN SEALS	UL LISTED EQUAL TO GB ELECTRICAL
IDS CADDY FASTENERS W/ BOLTS & NUTS	UL LISTED EQUAL TO ERICO, IDS
BAR HANGER SUPPORTS	UL LISTED EQUAL TO ERICO

A.4.9 WIREMOLD

#2300BC-BASE-COVER-8' LENGTH	UL LISTED RACEWAY, E90378, RJTX,UL5 UL94V-0, E90377, RJYT, NEC 352B
#2300WC-WIRE CLIP	UL LISTED RACEWAY, E90378, RJTX,UL5 UL94V-0, E90377, RJYT, NEC 352B
#2306-COVER CLIP	UL LISTED RACEWAY, E90378, RJTX,UL5 UL94V-0, E90377, RJYT, NEC 352B
#2310A-ENTRANCE END FITTING	UL LISTED RACEWAY, E90378, RJTX,UL5 UL94V-0, E90377, RJYT, NEC 352B
#2310B-BLANK END FITTING	UL LISTED RACEWAY, E90378, RJTX,UL5 UL94V-0, E90377, RJYT, NEC 352B
#2311-90* FLAT ELBOW	UL LISTED RACEWAY, E90378, RJTX,UL5 UL94V-0, E90377, RJYT, NEC 352B
#2315-TEE	UL LISTED RACEWAY, E90378, RJTX,UL5 UL94V-0, E90377, RJYT, NEC 352B
#2317-INTERNAL ELBOW	UL LISTED RACEWAY, E90378, RJTX,UL5 UL94V-0, E90377, RJYT, NEC 352B
#2318-EXTERNAL ELBOW	UL LISTED RACEWAY, E90378, RJTX,UL5 UL94V-0, E90377, RJYT, NEC 352B
#2347-DEVICE BOX-1 GANG	UL LISTED RACEWAY, E90378, RJTX,UL5 UL94V-0, E90377, RJYT, NEC 352B
32347-2-DEVICE BOX-2 GANG	UL LISTED RACEWAY, E90378, RJTX,UL5 UL94V-0, E90377, RJYT, NEC 352B

A.4.10 MISCELLANEOUS

3/4" X 4" GALVANIZED NIPPLE	
GALVANIZED FLOOR FLANGE 3/4"	ASTM C665, CLASS I UL FHC 25/50

A.5 INTERIOR FINISHES

A.5.1 CEILING

CERTAINTEED HHF-154 BIOSHIELD 2'X2'X5/8" CEILING TILE	UL LISTED CLASS I FLAME 15/SMOKE 5
WALL ANGLE - GALV. WA15-15 12'	FIREGUARD, CLASS I
MAIN TEE - CS12-12-15 MR X 12'	FIREGUARD, CLASS I
CROSS TEE - CS2-12-12 CT X 2'	FIREGUARD, CLASS I
RIVETS	
12-GA. WIRE (GALVANIZED)	
14-GA. HANGER CLIPS	UL LISTED EQUAL TO RAMSET 1202 CF

A.5.2 VINYL INTERIOR

WALLBOARDS - DURASAN VINYL COVERD GYPSUM SHEETROCK, COLOR: HARVEST COTTON 5/8" THICK, 4' X 8'	VINYL - UL LISTED CLASS I, ASTM E84-04, C960-04, C1396-02, FLAME 25 / SMOKE 50 OR LESS
OUTSIDE CORNER - 10' OUTSIDE CORNER, DURASAN, 2-PART SNAP ON, INTERIOR-GALVANIZED STEEL, VINYL EXTERIOR, SANTA FE-PORCELAIN	CLASS A ASTM E84-04, FLAME 25 / SMOKE 50 OR LESS
INSIDE CORNER - 10' INSIDE CORNER, DURASAN, 1 PIECE, INTERIOR-GALVANIZED STEEL, VINYL EXTERIOR, SANTA FE-PORCELAIN	CLASS A ASTM E84-04, FLAME 25 / SMOKE 50 OR LESS
8' BATT STRIPS-DURASAN, 2-PART SNAP ON, INTERIOR-GALVANIZED STEEL, VINYL EXTERIOR, SANTA FE-PORCELAIN	CLASS I FLAME 25 / SMOKE 50 OR LESS
ADHESIVE, DAP - DRYWALL	ASTM C557

A.5.3 FLOORING & BASE

VINYL BASE-COLOR: FLEXCO (COFFEE)

VINYL BASE ADHESIVE, DURABOND D-731

A.5.4 INTERIOR DOORS

3' X 6'-8" BIRCH DOOR UNIT INTERIOR W/ 5-1/2" TIMELY METAL FRAMES, SOLID CORE DOOR	
LATEX CAULK, EQUAL TO ACE ACRYLINK LATEX CAULK, GENERAL PURPOSE	ASTM-C-834-95
GALS EXT OIL BASE / RUST NOT METAL PAINT	NFPA CLASS II
PAINT INT. LATEX / WATER BASE	NON FLAMMABLE
PASSAGE HARDWARE / COMMERCIAL / GRADE, LIGHT DUTY SCHLAGE, ELAN COMMERCIAL PASSAGE F10 ELA 626	ADA APPROVED ANSI GRADE 2

A.5.5 COUNTER TOP

TOWER ANODIZED ALUMINUM 2 -PIECE INTERLOCKING 1" THICK COUNTERTOP	EXTRUDED ALUMINUM

A.6 HARDWARE

A.6.1 EXTERIOR DOORS

DOOR FRAME CECO, SERIES SU WELDED STEEL FRAMES, 5'-3/4" X 3' X 7'-0" WITH WOOD STUD ANCHORS, 16 GA., HEAVY DUTY, PRIMER PAINT COAT	UL LISTED 10B, EQUAL TO CECO, STEEL DOOR FRAME ANSI A250.8 -1998, ASTM A366, A620, A568 PRIMER PAINT COAT ANSI A250.10
DOOR CECO - HMD CP 18 A60 3068 F BW 1 3/4" (C1; LC1) POLYSTYRENE INSULATION PRIMER PAINT COAT R-11.1 AS CALCULATED	UL LISTED 10B, EQUAL TO CECO, STEEL DOOR ANSI A250.4 PERFORMANCE TEST, 18 AND 16 GAGE: LEVEL A (1,000,000 CYCLES) PRIMER PAINT COAT ANSI A250.10
ANCHORS WOOD & METAL STUD ANCHORS/ TYPE WS PER DOOR MANUFACTURER	UL LISTED, EQUAL TO CECO
HINGES PBB INC., FULL MORTISE TEMPLATE HINGES 4-1/2"X4" GA. 0.134 +\- .005 PB81	UL LISTED EQUAL TO PBB ANSI TEMPLATE ANSI A8133
THRESHOLD PEMKO-171 A36, MILL FINISH ALUMINUM 5"X1/2"	UL LISTED EQUAL TO HAGER ADA APPROVED
DOOR SWEEP-WEATHERSTRIP NATIONAL GUARD 101VA	
DOOR CLOSURE CAL-ROYAL CR441 ALUMINUM	ANSI/BHMA A1564.4 GRADE 1
1/4" FOAM WEATHER STRIPPING	
EXIT DEVICE, CAL-ROYAL A2200EO36-ALUM	ANSI/BHMA A156.3 GRADE 1
TRIM, CAL-ROYAL ENTOOL, US26D	ANSI/BHMA A156.3 GRADE 1

A.7 ROOFING

ADHESIVE MULE-HIDE, ACRYLIC WATER BASE BONDING	NON-FLAMMABLE, NON-TOXIC UL LISTED AS EXTERNAL FIRE EXPOSURE ONLY
ADHESIVE MULE-HIDE, BLACK SEAM ADHESIVE	AS EXTERNAL FIRE EXPOSURE ONLY
ROOF HATCH (OPTIONAL) 14 GA. GALV. STEEL, INSULATED, NON-COMBUSTIBLE 30" X 36" TYPE 'S' BILCO (LADDER) 30" X 54" TYPE 'NB' BILCO (SHIP STAIR)	COVER: 40 psf MIN. LIVE LOAD OR 20 psf WIND UPLOAD
ROOF COATING ACRYLINK G ACRYLIC ROOF COATING BY ISOPRIME ACRYLIC ROOF COATINGS, INC. ACRYCAULK	UL 790, CLASS A, ASTM E108 ASTM D 6083 UL 790, CLASS A

A.8 INSULATION

POLY ENCAPSULATED FIBERGLASS INSULATION - JOHNS MANVILLE - JM COMFORTTHERM INSULATION R-VALUE PER PLAN	ATSM C665, TYPE II, CLASS A, CAT. 1 OR 2 IBC, ALL TYPES ATSM E84 FLAME SPREAD <25 ATSM E84 SMOKE DEVELOPMENT <50
ARMORFLECT WHITE CONTINUOUS WRAP INSULATION: R-8.7 CONT. 1/4" FIBERGLASS CORE BONDED TO REINFORCED SCRIM FACING	ATSM C518, ASTM E84, ASTM E96, ASTM C1104 FLAME SPREAD <25, SMOKE DEVELOPED <50 VAPOR RETARDER (PERMS) <0.5 WATER VAPOR SORPTION LESS THAN 5%

NOTES:

STANDARDS LISTED ARE REFERENCE TO THE MANUFACTURERS PRODUCT REFERENCE STANDARD OR IBC REFERENCE STANDARD NUMBER.

1 / B27 APPENDIX "A" - MATERIAL SPECS

NOT TO SCALE

DCM Inc.

DOYLES CONSTRUCTION & MFG.
624 Sixth Street
P.O. Box 451
Graham, Texas 76450
Phone: (940) 549-5517
Fax: (940) 549-9438

THIS DRAWING AND ALL INFORMATION THEREIN IS THE PROPERTY OF THE SOUTHERN BLEACHER COMPANY, TAYLOR & SYFAN AND IS CONFIDENTIAL AND MUST NOT BE MADE PUBLIC OR COPIED. THIS DRAWING IS LOANED SUBJECT TO RE-TURN UPON DEMAND AND, IS NOT TO BE USED DIRECTLY OR INDIRECTLY IN ANY WAY DETRIMENTAL TO OUR INTERESTS.

TAYLOR & SYFAN
STRUCTURAL ENGINEERS
CENTRAL COAST OFFICE | Ph: (626) 793-7438 Fax: (626) 793-7439 Toll: (800) 579-3881
553 S. Oak Knoll Ave. Pasadena, CA 91101
http://www.tsstructural.com/

Southern® BLEACHER COMPANY
GRANDSTANDS ▪BLEACHERS ▪STADIUMS
PO Box One, Graham, Texas 76450
801 Fifth Street.
Phone: 940/549-0733 Fax: 940/549-1365
Established 1946

REGISTERED PROFESSIONAL ENGINEER
BRIAN T. DEAN
S 6087
STRUCTURAL
STATE OF CALIFORNIA
S&S
06/17/26
PRINCIPAL

TYPE: APPENDIX "A" MATERIAL SPECS
12/14" RISE X 26/26" TREAD / 331'-6" (5/13 ROWS)

TITLE: PARLIER UNIFIED SCHOOL DISTRICT
PARLIER HIGH SCHOOL
PARLIER, CALIFORNIA

REV	BY	DATE	DESCRIPTION

DATE	DRAWN	CHECKED
02/09/26	JOA	DMC

JOB NUMBER **#26011R2**

SHEET	OF
B27	B43

22" X 34" (11x17 = 1/2 indicated scale)

26011R2

A = GRID LETTERS

1 = GRID LINE

P1 = EXIT PAD (2 / B29)

R1 = RAMP PIER

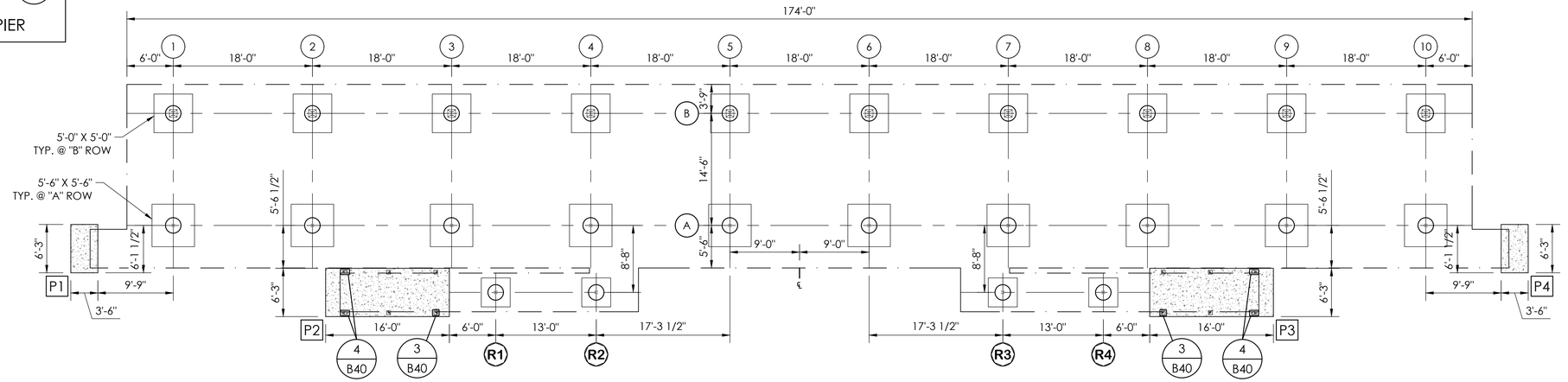

1 / B28 FOOTING LAYOUT
SCALE:1/8"=1'-0"

FOUNDATION NOTES

1. GENERAL CONTRACTOR SHALL VERIFY ALL DIMENSIONS PRIOR TO START OF CONSTRUCTION.
2. REINFORCING STEEL SHALL BE ASTM A615 GRADE 60.
3. CONCRETE SHALL HAVE A MINIMUM COMPRESSIVE STRENGTH OF 3000 PSI AT 28 DAYS.
4. MAXIMUM HORIZ. TOLERANCE OF ANCHOR BOLT PLACEMENT SHALL BE ±⅛".
5. ALL ANCHOR BOLTS SHALL HAVE A 3½" PROJECTION (±⅛") ABOVE THE TOP OF PIER ELEVATION, UNLESS SPECIFICALLY NOTED OTHERWISE.
6. THE CONCRETE FOUNDATION CONTRACTOR IS RESPONSIBLE FOR NON SHRINK GROUTING.
7. THE ELEVATION AT THE TOP OF THE CONCRETE PIER IS DESIGNED TO BE 1" BELOW THE BOTTOM OF STEEL ELEVATION. THE TOLERANCE FOR THE BOTTOM OF STEEL ELEVATION IS ±½". THE TOP OF CONCRETE ELEVATION MAY BE RAISED TO MATCH THE BOTTOM OF STEEL ELEVATION, AT THE CONCRETE CONTRACTORS DISCRETION. THE CONTRACTOR OF THE CONCRETE FOUNDATIONS IS RESPONSIBLE FOR ANY ADJUSTMENTS REQUIRED.
8. ALL UNDERGROUND UTILITIES ARE TO BE LOCATED AND MARKED DURING THE REVIEW PROCESS BY THE OWNERS REPRESENTATIVE PRIOR TO FOUNDATION EXCAVATION.
9. REMOVE/RELOCATE THE UNDERGROUND UTILITIES AS REQUIRED WHERE UNDERGROUND UTILITIES CONFLICT WITH THE NEW FOOTINGS.

THIS DRAWING AND ALL INFORMATION THEREIN IS THE PROPERTY OF THE SOUTHERN BLEACHER COMPANY, MOBILEPAN AND CONFIDENTIAL AND MUST NOT BE LOANED OR COPIED. THIS DRAWING IS LOANED SUBJECT TO RE-TURN UPON DEMAND AND, IS NOT TO BE USED DIRECTLY OR INDIRECTLY IN ANY WAY DETRIMENTAL TO OUR INTERESTS.

STRUCTURAL ENGINEERS
TAYLOR & SYFAN
CONTACT: Phn: (626) 793-7438
OFFICE: Fax: (626) 793-3881
Email: Ronald Taylor (rtaylor@tsmanuals.com)
http://www.tsmanuals.com)
553 S. Oak Knoll Ave. Pasadena, CA 91101

Southern® BLEACHER COMPANY
GRANDSTANDS •BLEACHERS •STADIUMS
PO Box One, Graham, Texas 76450
801 Fifth Street
Phone: 940/549-0733 Fax: 940/549-1368
Established 1946

REGISTERED PROFESSIONAL ENGINEER
BRIAN T. DEATHERAGE
S 6087
STRUCTURAL
STATE OF CALIFORNIA
S&S
06/17/26
PRINCIPAL

TYPE: FOOTING LAYOUT
12" RISE X 25" TREAD / 174'-0" (10 ROWS)

TITLE: PARLIER UNIFIED SCHOOL DISTRICT
PARLIER HIGH SCHOOL
PARLIER, CALIFORNIA

REV	BY	DATE	DESCRIPTION

DATE	DRAWN	CHECKED
02/09/26	JOA	DMC

JOB NUMBER #26011R2

SHEET	OF
B28	B43

22" X 34" (11x17 = 1/2 indicated scale)

26011R2

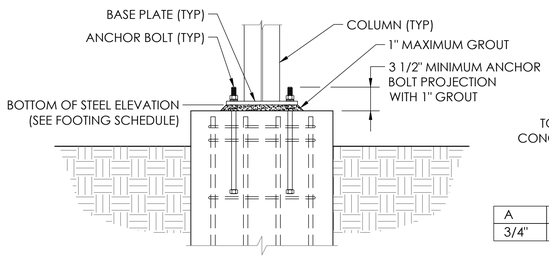

@ COLUMN

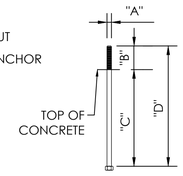

A	B	C	D	TYPE
3/4"	3.5"	14.5"	18"	F1554 Gr. 55

1 B29 TOP OF PIER DETAIL
NOT TO SCALE

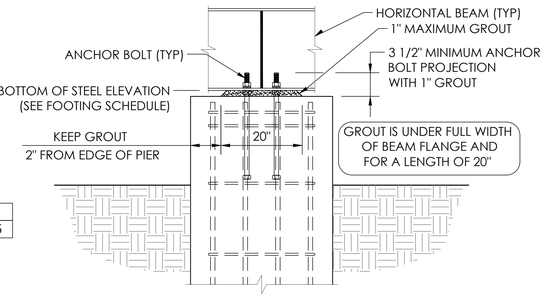

@ HORIZONTAL BEAM

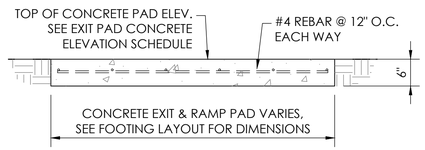

2 B29 MINIMUM EXIT PAD DETAIL
NOT TO SCALE

EXIT PAD CONCRETE ELEVATION SCHEDULE

(P = CONCRETE PAD)	TOP OF CONCRETE ELEV.
P1	100.000'
P2	100.000'
P3	100.000'
P4	100.000'

A	B	C
3/8"	2-7/8"	5"
1/2"	3-7/8"	7"
5/8"	3-5/8"	7"

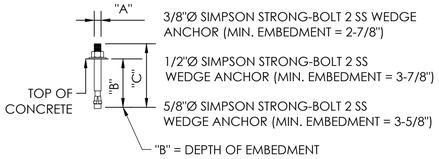

3 B29 WEDGE ANCHOR DETAIL
NOT TO SCALE

FOOTING SCHEDULE

NOTE: WHEN PEDESTAL HEIGHT IS 16" OR LESS, PEDESTALS SHALL BE POURED MONOLITHICALLY WITH PAD FOOTING

FOOTING # (A = GRIDLINE) (R = RAMP PIER)	TOP OF PIER ELEV.	BOTTOM OF STEEL ELEV.	GROUT	"H"	"D"	"H2"	"W"	FOOTING REINFORCEMENT	PIER DIAMETER	ANCHOR BOLTS
A - G.L. 1-3 & 8-10	100.304'	100.398'	1-1/8"	14"	19"	26" MAX.	5'-6" X 5'-6"	(6) #6 EACH WAY BOTTOM & #5 @ 18" O.C. TOP	24"Ø	(4)3/4"Ø X 18" HEADED ANCHOR BOLTS
A - G.L. 4 - 7	100.304'	100.387'	1"	14"	19"	26" MAX.	5'-6" X 5'-6"	(6) #6 EACH WAY BOTTOM & #5 @ 18" O.C. TOP	24"Ø	(4)3/4"Ø X 18" HEADED ANCHOR BOLTS
B	100.304'	100.387'	1"	14"	19"	26" MAX.	5'-0" X 5'-0"	(5) #6 EACH WAY BOTTOM	24"Ø	(4)3/4"Ø X 18" HEADED ANCHOR BOLTS
R1 & R4	100.730'	100.813'	1"	14"	19"	38" MAX.	3'-9" X 3'-9"	(4) #6 EACH WAY BOTTOM	24"Ø	(4)3/4"Ø X 18" HEADED ANCHOR BOLTS
R2 & R3	101.622'	101.705'	1"	14"	19"	38" MAX.	3'-9" X 3'-9"	(4) #6 EACH WAY BOTTOM	24"Ø	(4)3/4"Ø X 18" HEADED ANCHOR BOLTS

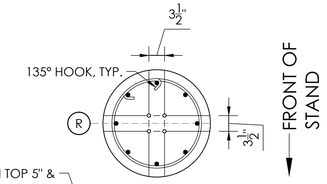

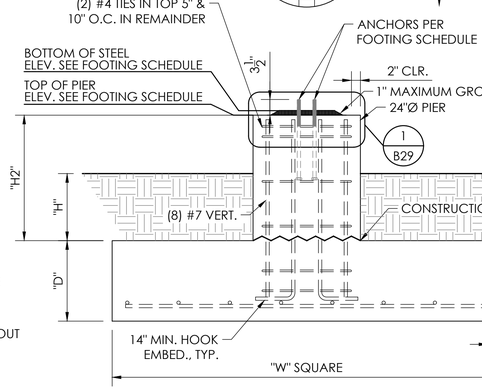

7 B29 FOOTING & PIER DETAIL
NOT TO SCALE

THE ENDS OF THE CIRCULAR TIE SHALL OVERLAP BY NOT LESS THAN 6" AND TERMINATE WITH STANDARD HOOKS THAT ENGAGE A VERTICAL BAR. OVERLAPS AT ENDS OF ADJACENT CIRCULAR TIES SHALL BE STAGGERED AROUND THE PERIMETER ENCLOSING THE LONGITUDINAL BARS, TYP.

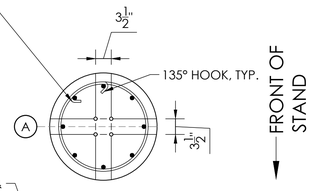

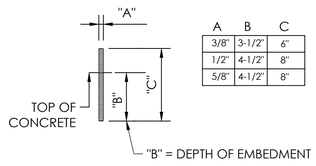

A	B	C
3/8"	3-1/2"	6"
1/2"	4-1/2"	8"
5/8"	4-1/2"	8"

3/8"Ø X 6" HDG ALL THREADED ROD w/ SIMPSON AT-3G
ICC-ES ESR-5026 & 1" MAX. GROUT
(MIN. EMBEDMENT = 3-1/2")

1/2"Ø X 8" HDG ALL THREADED ROD w/ SIMPSON AT-3G
ICC-ES ESR-5026 & 1" MAX. GROUT
(MIN. EMBEDMENT = 4-1/2")

5/8"Ø X 8" HDG ALL THREADED ROD w/ SIMPSON AT-3G
ICC-ES ESR-5026 & 1" MAX. GROUT
(MIN. EMBEDMENT = 4 1/2")

THREADED ROD WITH EPOXY MAY BE USED IN LIEU OF SIMPSON STRONG-BOLT 2 SS WEDGE ANCHOR

4 B29 THREADED ROD DETAIL
NOT TO SCALE

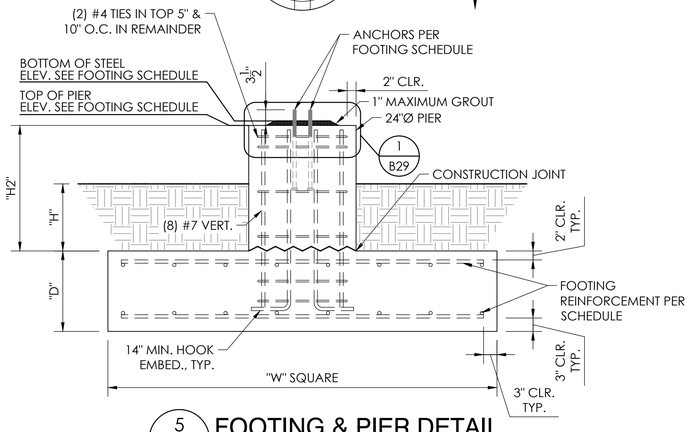

5 B29 FOOTING & PIER DETAIL
NOT TO SCALE

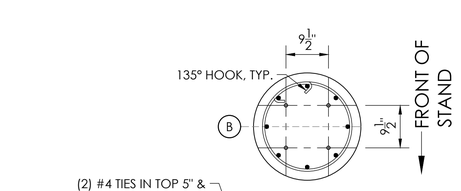

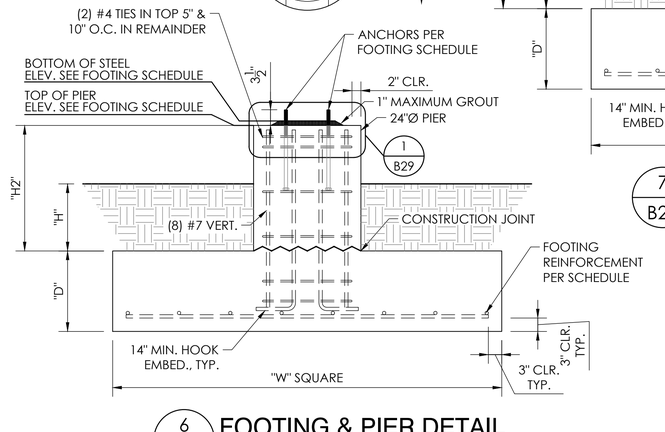

6 B29 FOOTING & PIER DETAIL
NOT TO SCALE

THIS DRAWING AND ALL INFORMATION THEREIN IS THE PROPERTY OF THE SOUTHERN BLEACHER COMPANY, MCB & SYHA AND IS CONFIDENTIAL AND MUST NOT BE MADE PUBLIC OR COPIED. THIS DRAWING IS LOANED SUBJECT TO RE-TURN UPON DEMAND AND, IS NOT TO BE USED DIRECTLY OR INDIRECTLY IN ANY WAY DETRIMENTAL TO OUR INTERESTS.

STRUCTURAL ENGINEERS
CENTRAL OFFICE
553 S. Oak Knoll Ave. Pasadena, CA 91101
Ph: (626) 793-7438
Fax: (626) 793-3881
http://www.tsmstructural.com/

TAYLOR & SYFAN

Southern®
BLEACHER COMPANY
GRANDSTANDS •BLEACHERS •STADIUMS
Established 1946

PO Box One, Graham, Texas 76450
801 Fifth Street
Phone: 940-549-0733 Fax: 940-549-1368

REGISTERED PROFESSIONAL ENGINEER
BRIAN T. DEAN
S 6087
STRUCTURAL
STATE OF CALIFORNIA
S&S
06/17/26
PRINCIPAL

ITEM	DESCRIPTION
1	PIER DETAILS
2	12" RISE X 25" TREAD / 174'-0" (10 ROWS)

PARLIER UNIFIED SCHOOL DISTRICT
PARLIER HIGH SCHOOL
PARLIER, CALIFORNIA

REV	BY	DATE	DESCRIPTION

DATE	DRAWN	CHECKED
02/09/26	JOA	DMC

JOB NUMBER #26011R2

SHEET B29 OF B43

22" X 34" (11x17 = 1/2 indicated scale)

26011R2

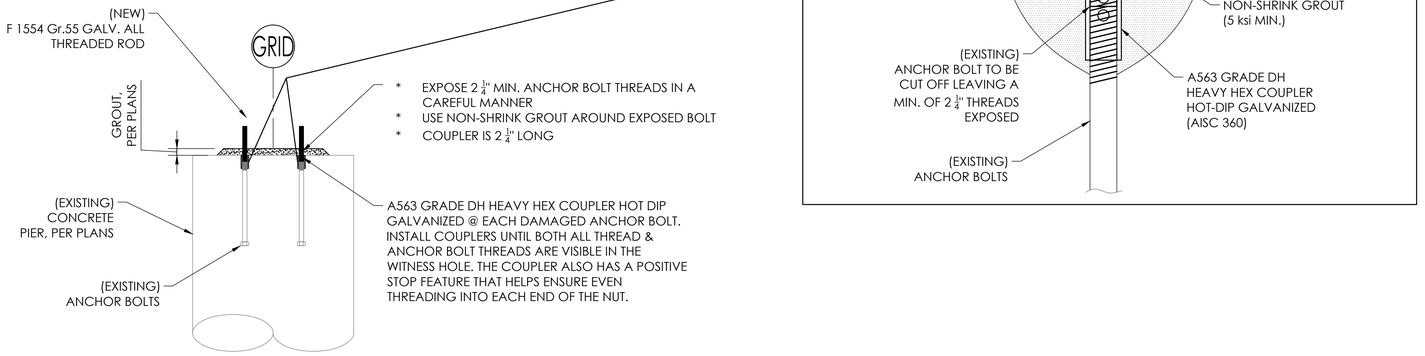

1 / B30 DETAIL @ DAMAGED F1554 Gr. 55 BOLTS
NOT TO SCALE

DETAIL TO BE USED IF REQUIRED WITH SEOR APPROVAL OF EACH USE

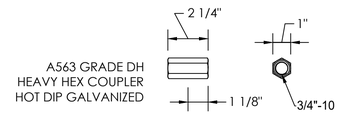

3 / B30 3/4" COUPLER
SCALE:3"=1'-0"

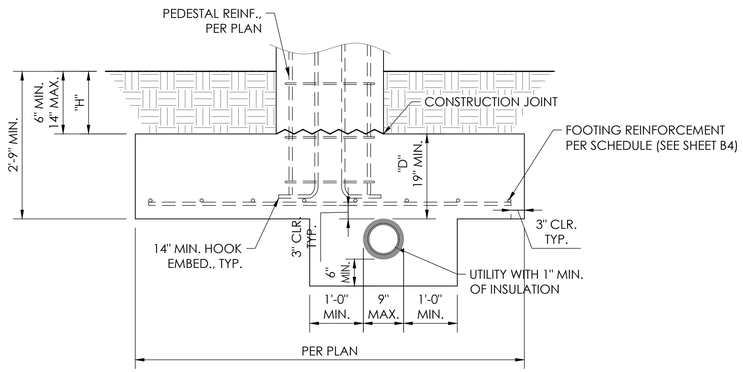

2 / B30 FOOTING DETAIL @ UTILITY
NOT TO SCALE

DETAIL TO BE USED IF REQUIRED

THIS DRAWING AND ALL INFORMATION THEREIN IS THE PROPERTY OF THE SOUTHERN BLEACHER COMPANY, MCB § 1714 AND IS CONFIDENTIAL AND MUST NOT BE MADE PUBLIC OR COPIED. THIS DRAWING IS LOANED SUBJECT TO RE-TURN UPON DEMAND AND, IS NOT TO BE USED DIRECTLY OR INDIRECTLY IN ANY WAY DETRIMENTAL TO OUR INTERESTS.

STRUCTURAL ENGINEERS
TAYLOR & SYFAN
553 S. Oak Knoll Ave., Pasadena, CA 91101
CENTRAL Ph: (626) 793-7438
COAST Fax: (626) 793-3881
http://www.tsmanet.com
Southern BLEACHER COMPANY
GRANDSTANDS • BLEACHERS • STADIUMS
PO Box One, Graham, Texas 76450
801 Fifth Street Phone: 940/549-0733 Fax: 940/540-1365
Established 1946

REGISTERED PROFESSIONAL ENGINEER
BRIAN T. DEAKEN
S 6087
STRUCTURAL
STATE OF CALIFORNIA
S&S 06/17/26
PRINCIPAL

TYPE: PIER DETAILS
12" RISE X 25" TREAD / 174'-0" (10 ROWS)
TITLE: PARLIER UNIFIED SCHOOL DISTRICT
PARLIER HIGH SCHOOL
PARLIER, CALIFORNIA

REV	BY	DATE	DESCRIPTION

DATE 02/09/26 | DRAWN JOA | CHECKED DMC

JOB NUMBER #26011R2

SHEET B30 | OF B43

22" X 34" (11x17 = 1/2 indicated scale)

26011R2

A = GRID LINE
1 = STRINGER NUMBERS
B1 = BEAM NUMBERS
= SPLICE LOCATION
S1 = RAMP STRINGER
R1 = RAMP PIER

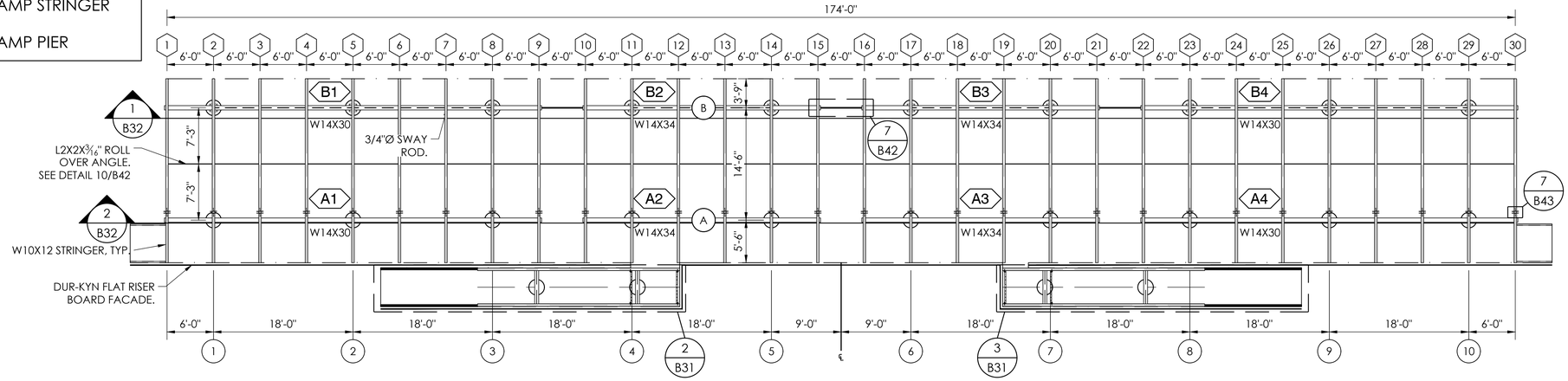

1 B31 UNDERSTRUCTURE LAYOUT
SCALE:1/8"=1'-0"

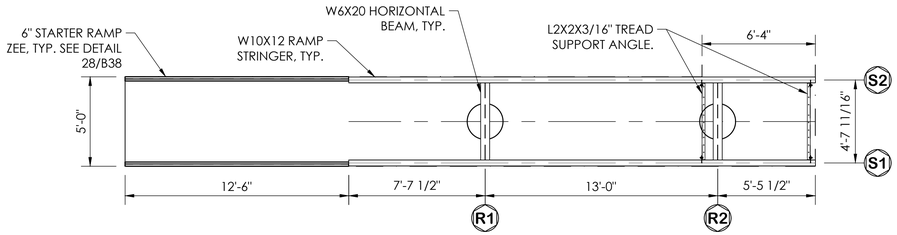

2 B31 LEFT RAMP UNDERSTRUCTURE LAYOUT
SCALE:NTS

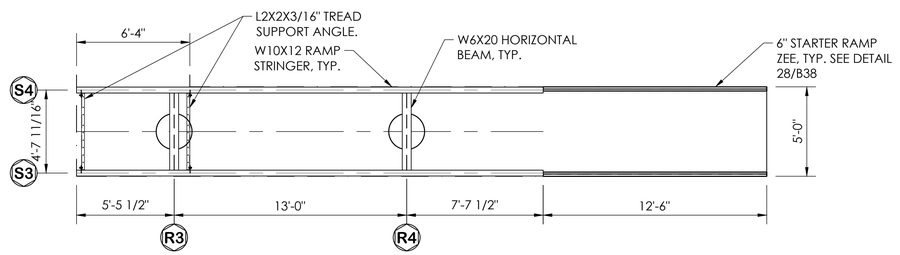

3 B31 RIGHT RAMP UNDERSTRUCTURE LAYOUT
SCALE:NTS

THIS DRAWING AND ALL INFORMATION THEREIN IS THE PROPERTY OF THE SOUTHERN BLEACHER COMPANY, TAYLOR & SYFAN AND IS CONFIDENTIAL AND MUST NOT BE MADE PUBLIC OR COPIED. THIS DRAWING IS LOANED SUBJECT TO RE-TURN UPON DEMAND AND, IS NOT TO BE USED DIRECTLY OR INDIRECTLY IN ANY WAY DETRIMENTAL TO OUR INTERESTS.

STRUCTURAL ENGINEERS
CENTRAL COAST OFFICE
Ph: (626) 793-7438
Fax: (626) 793-7439
Toll: (800) 579-3881
553 S. Oak Knoll Ave. Pasadena, CA 91101
http://www.ssructural.com/
TAYLOR & SYFAN
Southern® BLEACHER COMPANY
GRANDSTANDS • BLEACHERS • STADIUMS
PO Box One, Graham, Texas 76450
801 Fifth Street
Phone: 940/549-0733 Fax: 940/549-1365
Established 1946

REGISTERED PROFESSIONAL ENGINEER
BRIAN T. DEAN
S 6087
STRUCTURAL
STATE OF CALIFORNIA
S&S 06/17/26
PRINCIPAL

TYPE: UNDERSTRUCTURE LAYOUT
12" RISE X 25" TREAD / 174'-0" (10 ROWS)

TITLE: PARLIER UNIFIED SCHOOL DISTRICT
PARLIER HIGH SCHOOL
PARLIER, CALIFORNIA

REV	BY	DATE	DESCRIPTION

DATE	DRAWN	CHECKED
02/09/26	JOA	DMC

JOB NUMBER #26011R2

SHEET B31 OF B43

22" X 34" (11x17 = 1/2 indicated scale)

26011R2

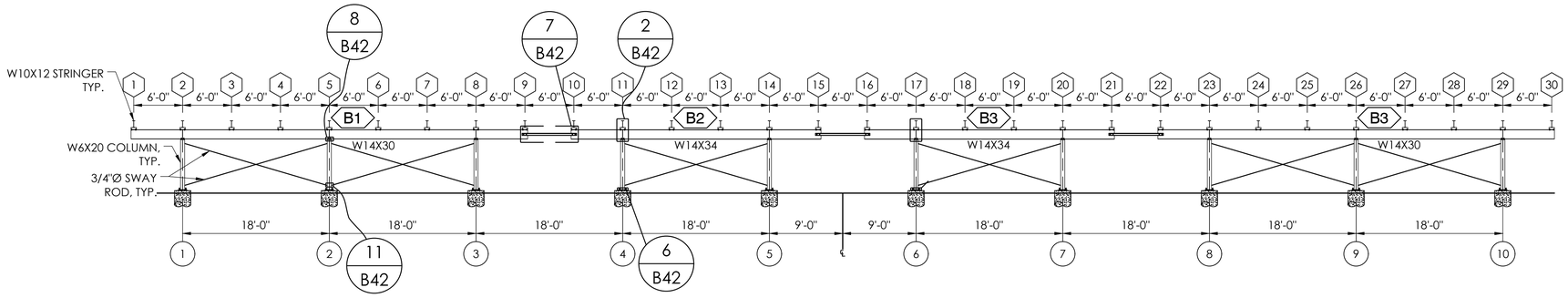

1 / B32 "B" ROW ELEVATION VIEW
SCALE:1/8"=1'-0"

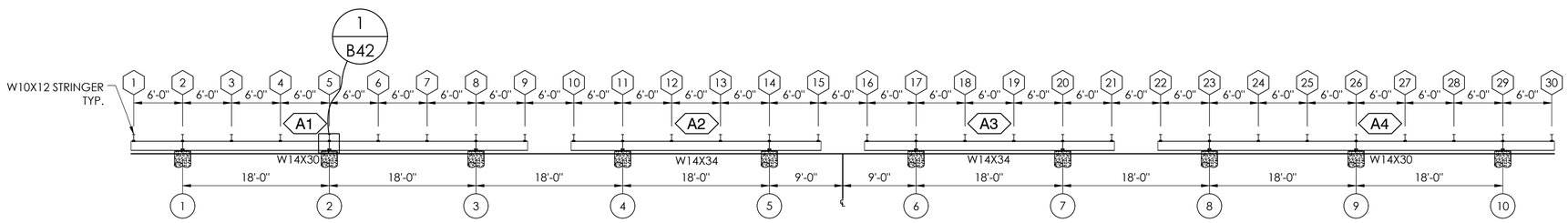

2 / B32 "A" ROW ELEVATION VIEW
SCALE:1/8"=1'-0"

THIS DRAWING AND ALL INFORMATION THEREIN IS THE PROPERTY OF THE SOUTHERN BLEACHER COMPANY, MOBILE, ALABAMA AND IS CONFIDENTIAL AND MUST NOT BE MADE PUBLIC OR COPIED. THIS DRAWING IS LOANED SUBJECT TO RE-TURN UPON DEMAND AND, IS NOT TO BE USED DIRECTLY OR INDIRECTLY IN ANY WAY DETRIMENTAL TO OUR INTERESTS.

STRUCTURAL ENGINEERS
TAYLOR & SYFAN
CENTRAL OFFICE
553 S. Oak Knoll Ave. Pasadena, CA 91101
Ph: (626) 792-7458
Fax: (626) 792-7461
FOR BIDS: 349-3881
http://www.tsmanuals.com/

Southern®
BLEACHER COMPANY
GRANDSTANDS •BLEACHERS •STADIUMS
PO Box One, Graham, Texas 76450
801 Fifth Street
Phone: 940/549-0733 Fax: 940/549-1365
Established 1946

REGISTERED PROFESSIONAL ENGINEER
BRIAN T. DEATHERAGE
S 6087
STRUCTURAL
STATE OF CALIFORNIA
S&S
06/17/26
PRINCIPAL

TYPE: ELEVATION VIEWS
12" RISE X 25" TREAD / 174'-0" (10 ROWS)

TITLE: PARLIER UNIFIED SCHOOL DISTRICT
PARLIER HIGH SCHOOL
PARLIER, CALIFORNIA

REV	BY	DATE	DESCRIPTION

DATE	DRAWN	CHECKED
02/09/26	JOA	DMC

JOB NUMBER #26011R2

SHEET B32 OF B43

22" X 34" (11x17 = 1/2 indicated scale)

26011R2

ITEM DESCRIPTION

1. W 14 X 30 (50 ksi)
2. W 14 X 34 (50 ksi)
3. W 10 X 12 (50 ksi)
4. W 6 X 20 (50 ksi)
5. L 3 X 3 X 1/4 (50 ksi)
6. L 2 X 2 X 3/16 (50 ksi)
7. 12 X 12 X 5/8 PLATE
8. 6 X 6 X 3/8 PLATE
9. 3/4 X REQ'D LENGTH SWAY ROD (50 ksi)
10. 3/4 X 18 ANCHOR BOLT W/2 HEX HEAD NUTS & FLAT WASHER
11. 1" BLACK VINYL COATED CHAIN-LINK FENCE
12. ANODIZED ALUMINUM RAIL (SEE NOTES)
13. 3 X 3/8 GUSSET PLATE (A36)
14. 5 X 3/8 GUSSET PLATE (A36)
15. 2 X 1/4 GUSSET PLATE (A36)
16. 2" BLACK VINYL COATED CHAIN-LINK FENCE

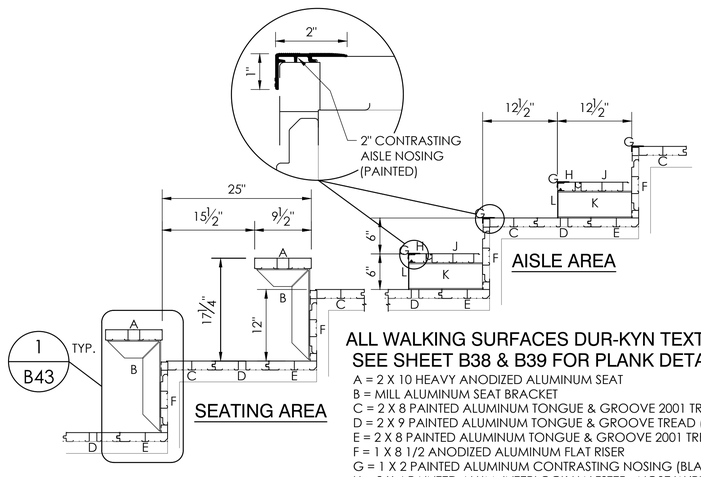

ALL WALKING SURFACES DUR-KYN TEXTURED GRAY
SEE SHEET B38 & B39 FOR PLANK DETAILS

A = 2 X 10 HEAVY ANODIZED ALUMINUM SEAT
B = MILL ALUMINUM SEAT BRACKET
C = 2 X 8 PAINTED ALUMINUM TONGUE & GROOVE 2001 TREAD - NOSE (TEXTURED GRAY)
D = 2 X 9 PAINTED ALUMINUM TONGUE & GROOVE TREAD (#69431) (TEXTURED GRAY)
E = 2 X 8 PAINTED ALUMINUM TONGUE & GROOVE 2001 TREAD - HEEL (TEXTURED GRAY)
F = 1 X 8 1/2 ANODIZED ALUMINUM FLAT RISER
G = 1 X 2 PAINTED ALUMINUM CONTRASTING NOSING (BLACK)
H = 2 X 4 PAINTED ALUM. INTERLOCK HALFSTEP - NOSE W/RISER (TEXTURED GRAY)
J = 2 X 8 PAINTED ALUM. INTERLOCK HALFSTEP - DECK (TEXTURED GRAY)
K = 4 1/2" MILL ALUMINUM HALFSTEP BRACKET
L = 4 1/2" ANODIZED ALUMINUM INTERLOCK STEP RISER

3 B33 **PLANK ARRANGEMENT**
NOT TO SCALE 12" X 25"

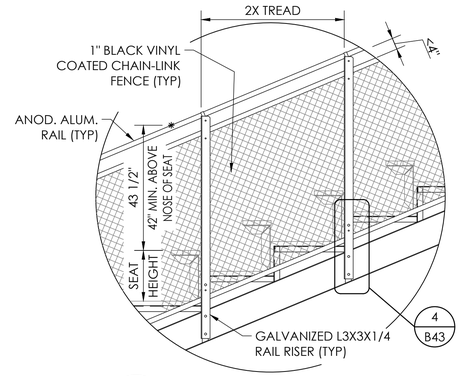

4 B33 **TYPICAL SIDE RAILING**
SCALE:1/2"=1'-0"

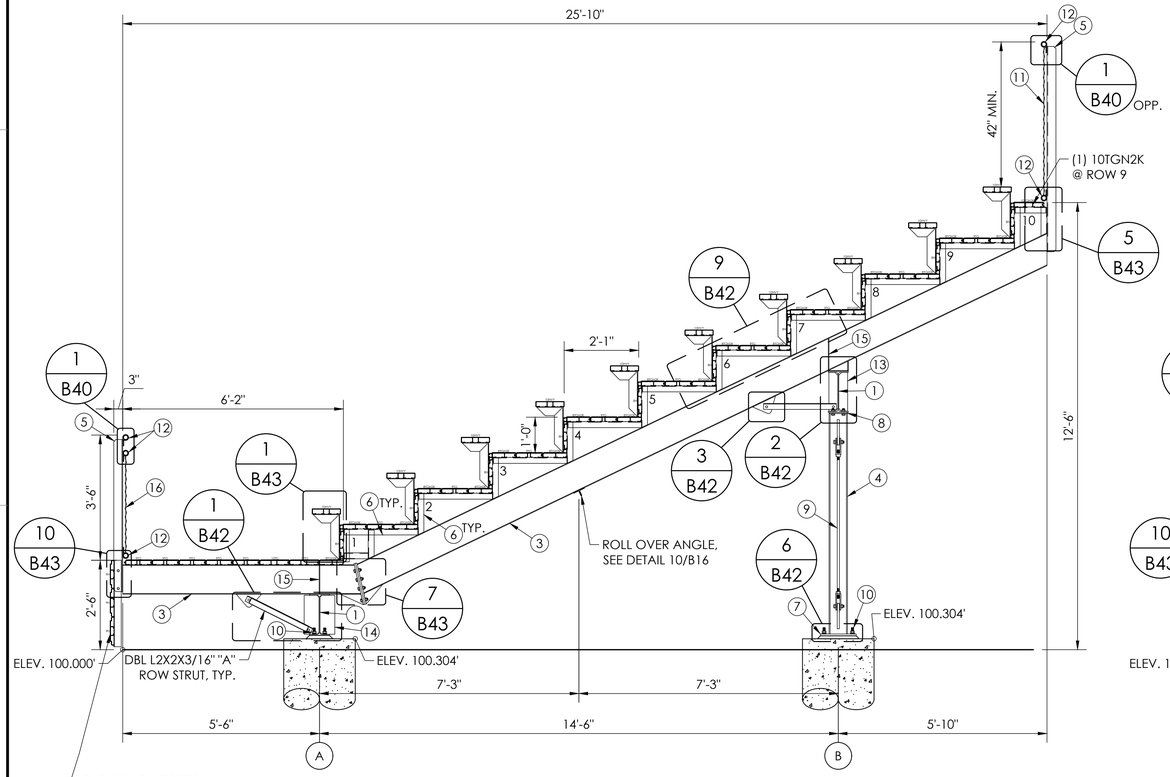

1 B33 **SECTION VIEW**
SCALE:1/2"=1'-0"

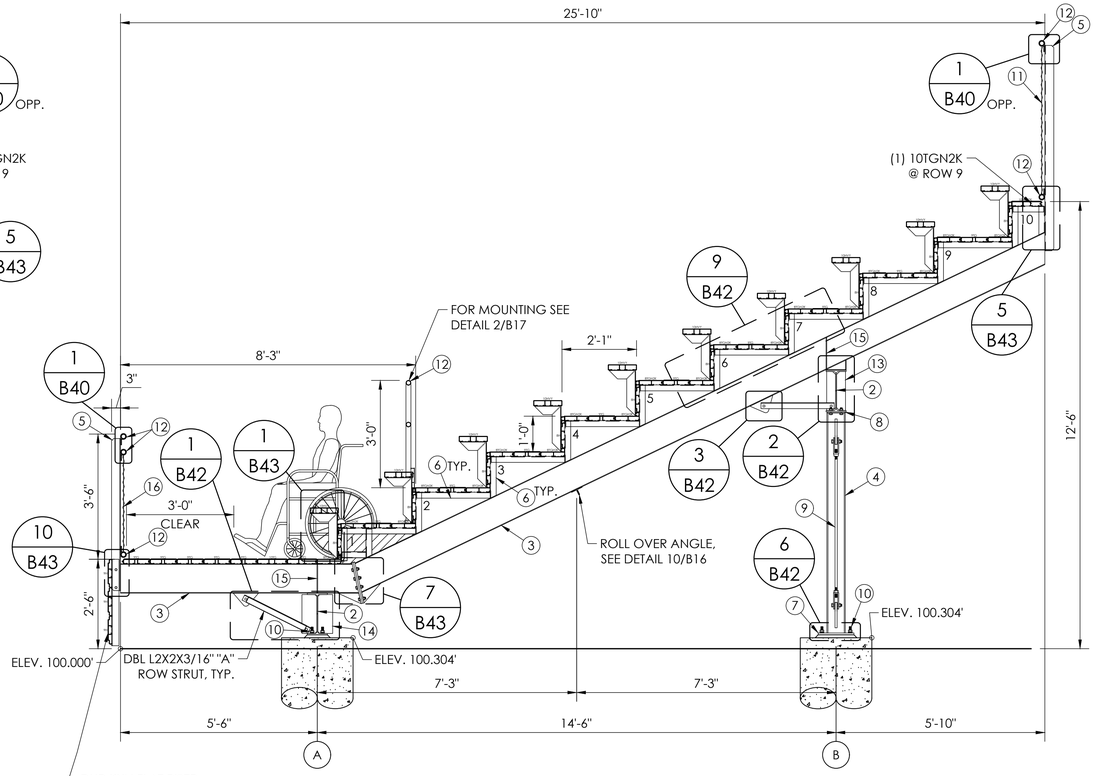

2 B33 **SECTION VIEW**
SCALE:1/2"=1'-0"

THIS DRAWING AND ALL INFORMATION THEREIN IS THE PROPERTY OF THE SOUTHERN BLEACHER COMPANY, AND IS STRICTLY AND CONFIDENTIAL AND MUST NOT BE MADE PUBLIC OR COPIED. THIS DRAWING IS LOANED SUBJECT TO RE-TURN UPON DEMAND AND, IS NOT TO BE USED DIRECTLY OR INDIRECTLY IN ANY WAY DETRIMENTAL TO OUR INTERESTS.

STRUCTURAL ENGINEERS
TAYLOR & SYFAN
CONTACT: Scott Kendall, P.E.
OFFICE: Ph: (626) 793-7438
FAX: Fax: (626) 793-7487
553 S. Oak Knoll Ave. Pasadena, CA 91101
http://www.tsinstructural.com/

Southern® BLEACHER COMPANY
GRANDSTANDS •BLEACHERS •STADIUMS
Established 1946
PO Box One, Graham, Texas 76450
801 Fifth Street Phone: 940-549-0733 Fax: 940-549-1365

REGISTERED PROFESSIONAL ENGINEER BRIAN T. DEAKEN S 6087 STRUCTURAL STATE OF CALIFORNIA
S&S 06/17/26
PRINCIPAL

TYPE: SECTION VIEW
12" RISE X 25" TREAD / 174'-0" (10 ROWS)
TITLE: PARLIER UNIFIED SCHOOL DISTRICT
PARLIER HIGH SCHOOL
PARLIER, CALIFORNIA

REV	BY	DATE	DESCRIPTION

DATE 02/09/26 | DRAWN JOA | CHECKED DMC
JOB NUMBER #26011R2
SHEET B33 | OF B43

22" X 34" (11x17 = 1/2 indicated scale)

26011R2

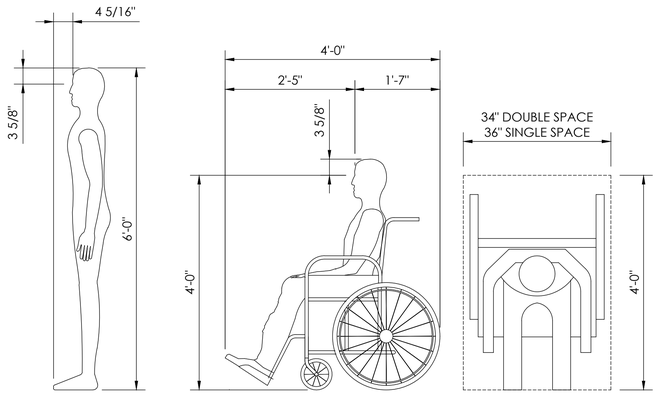

2 / B34 SIGHT LINE PARAMETERS
SCALE: 3/4"=1'-0"

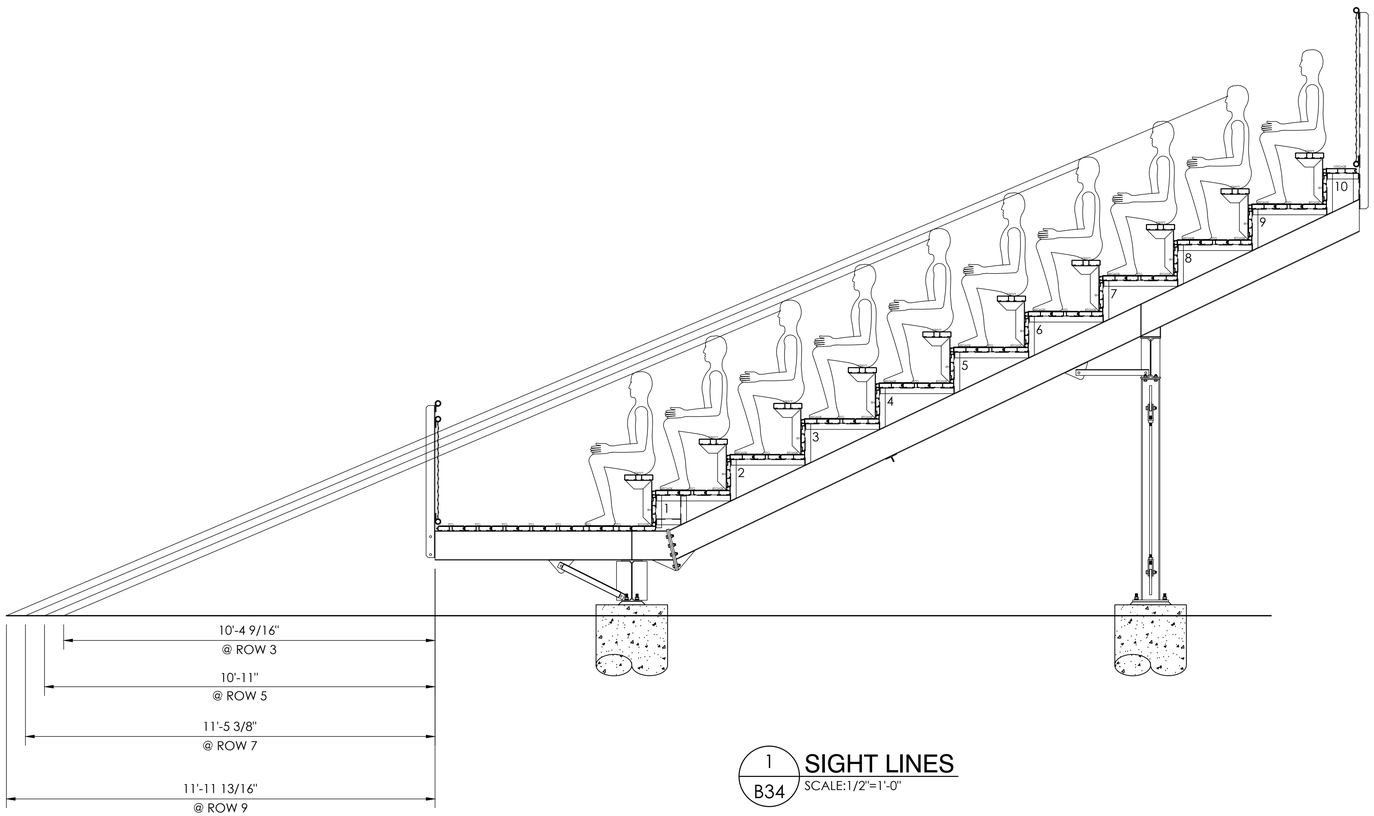

1 / B34 SIGHT LINES
SCALE:1/2"=1'-0"

THIS DRAWING AND ALL INFORMATION THEREIN IS THE PROPERTY OF THE SOUTHERN BLEACHER COMPANY, INC. & SYKAN AND IS CONFIDENTIAL AND MUST NOT BE MADE PUBLIC OR COPIED. THIS DRAWING IS LOANED SUBJECT TO RE-TURN UPON DEMAND AND, IS NOT TO BE USED DIRECTLY OR INDIRECTLY IN ANY WAY DETRIMENTAL TO OUR INTERESTS.

STRUCTURAL ENGINEERS
TAYLOR & SYKAN
CENTRAL OFFICE: 553 S. Oak Knoll Ave. Pasadena, CA 91101
Ph: (626) 793-7438
Fax: (626) 793-7481
For (800) 379-3881
http://www.tsinaturals.com/

Southern® BLEACHER COMPANY
GRANDSTANDS •BLEACHERS •STADIUMS
PO Box One, Graham, Texas 76450
801 Fifth Street
Phone: 940-549-0733 Fax: 940-549-1365
Established 1946

REGISTERED PROFESSIONAL ENGINEER
BRIAN T. DEAN
S 6087
STRUCTURAL
STATE OF CALIFORNIA
S&S
06/17/26
PRINCIPAL

TYPE: SIGHT LINES
12" RISE X 25" TREAD / 174'-0" (10 ROWS)

TITLE: PARLIER UNIFIED SCHOOL DISTRICT
PARLIER HIGH SCHOOL
PARLIER, CALIFORNIA

REV	BY	DATE	DESCRIPTION

DATE: 02/09/26 | DRAWN: JOA | CHECKED: DMC

JOB NUMBER: #26011R2

SHEET: B34 OF: B43

22" X 34" (11x17 = 1/2 indicated scale)

26011R2

5'-0" X 150 = 750 PEOPLE CAPACITY

174'-0" + 20'-11 3/4" = 194'-11 3/4" BELOW 400'

CBC 1019.3: Exception 7
Exit access stairways and ramps serving open-air seating complying with exit access travel distance required by 1030.7

CBC 1030.7: Exception 2.
Travel distance from each seat to building exterior shall not exceed 400' and unlimited for Type I and Type II construction.

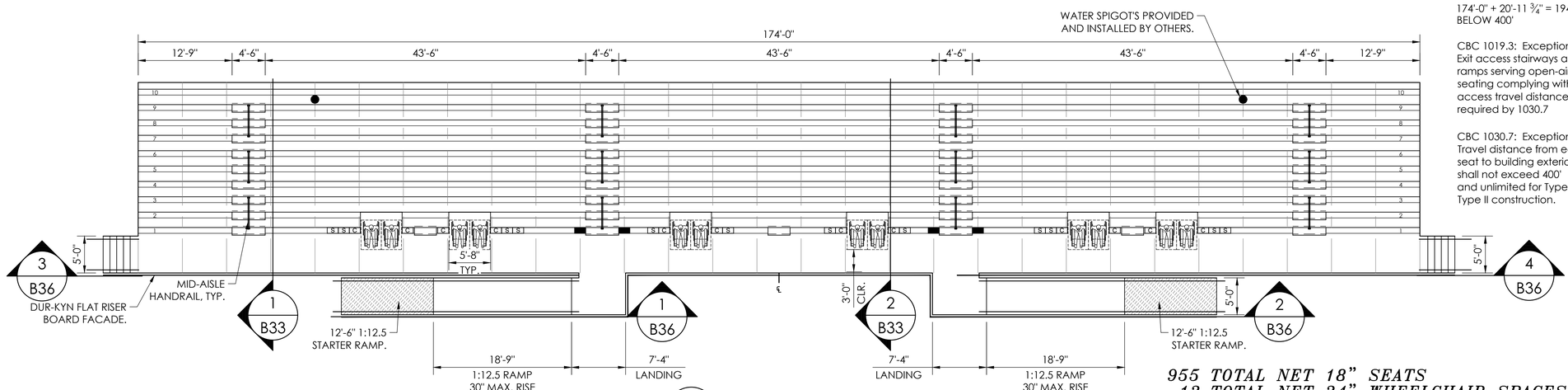

1 / B35 SEATING LAYOUT
SCALE:1/8"=1'-0"

955 TOTAL NET 18" SEATS
12 TOTAL NET 34" WHEELCHAIR SPACES
12 TOTAL NET 18" COMPANION SEATS = C
12 TOTAL NET 18" SEMI-AMBULANT SEATS = S
4 TOTAL NET 18" AISLE SEATS = ■
995 TOTAL SEATING CAPACITY

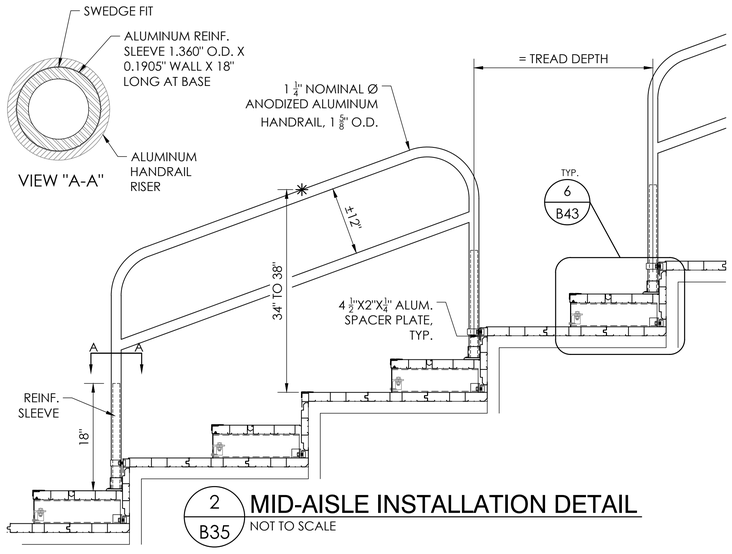

2 / B35 MID-AISLE INSTALLATION DETAIL
NOT TO SCALE

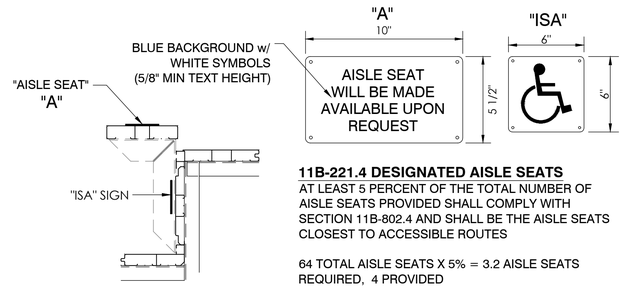

11B-221.4 DESIGNATED AISLE SEATS
AT LEAST 5 PERCENT OF THE TOTAL NUMBER OF AISLE SEATS PROVIDED SHALL COMPLY WITH SECTION 11B-802.4 AND SHALL BE THE AISLE SEATS CLOSEST TO ACCESSIBLE ROUTES

64 TOTAL AISLE SEATS X 5% = 3.2 AISLE SEATS REQUIRED, 4 PROVIDED

■ = AISLE SEATS

3 / B35 DESIGNATED AISLE SEATS
NOT TO SCALE

THIS DRAWING AND ALL INFORMATION THEREIN IS THE PROPERTY OF THE SOUTHERN BLEACHER COMPANY, MCD & SYKAN AND IS CONFIDENTIAL AND MUST NOT BE MADE PUBLIC OR COPIED. THIS DRAWING IS LOANED SUBJECT TO RE-TURN UPON DEMAND AND, IS NOT TO BE USED DIRECTLY OR INDIRECTLY IN ANY WAY DETRIMENTAL TO OUR INTERESTS.

STRUCTURAL ENGINEERS
553 S. Oak Knoll Ave. Pasadena, CA 91101
CENTRAL Ph: (626) 793-7438
OFFICE Fax: (626) 793-7441
FOR Ph: (805) 379-3881
PROJECT http://www.tsmstructural.com/

TAYLOR & SYKAN

Southern BLEACHER COMPANY
GRANDSTANDS • BLEACHERS • STADIUMS
Established 1946

PO Box One, Graham, Texas 76450
801 Fifth Street Phone: 940-549-0733 Fax: 940-549-1365

REGISTERED PROFESSIONAL ENGINEER
BRIAN T. DEAN
S 6087
STRUCTURAL
STATE OF CALIFORNIA
S&S 06/17/26
PRINCIPAL

TITLE: SEATING LAYOUT
12" RISE X 25" TREAD / 174'-0" (10 ROWS)

PARLIER UNIFIED SCHOOL DISTRICT
PARLIER HIGH SCHOOL
PARLIER, CALIFORNIA

REV	BY	DATE	DESCRIPTION

DATE 02/09/26 | DRAWN JOA | CHECKED DMC

JOB NUMBER #26011R2

SHEET B35 | OF B43

22" X 34" (11x17 = 1/2 indicated scale)

26011R2

P1 = EXIT PAD (2/B4)

R1 = RAMP PIER

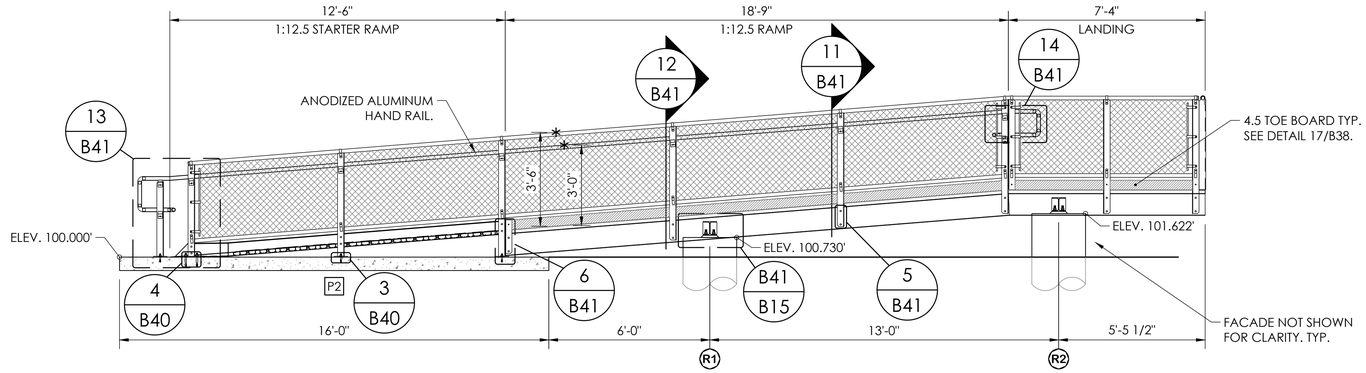

1/B36 LEFT SIDE 1:12.5 RAMP
SCALE:3/8"=1'-0"

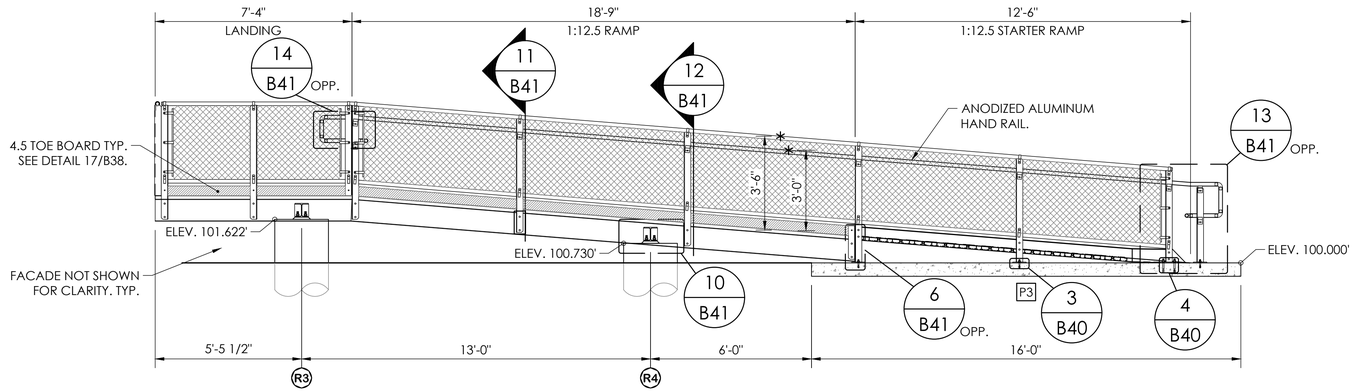

2/B36 RIGHT SIDE 1:12.5 RAMP
SCALE:3/8"=1'-0"

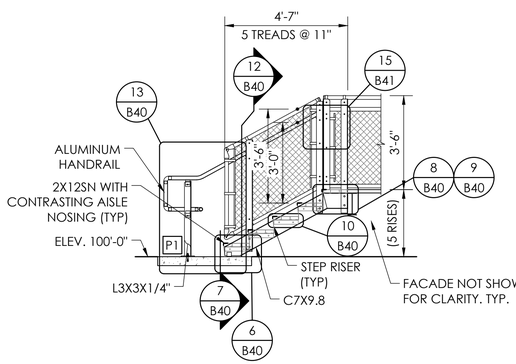

3/B36 LEFT SIDE END EXIT STAIR
SCALE:3/8"=1'-0"

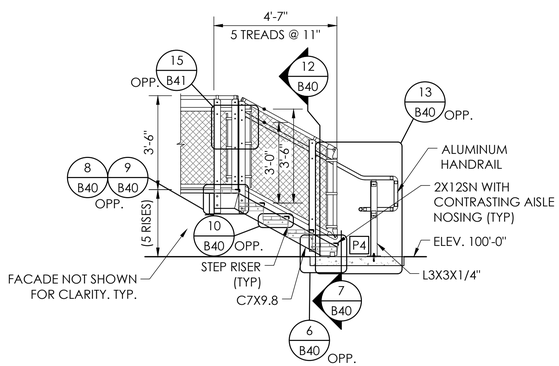

4/B36 RIGHT SIDE END EXIT STAIR
SCALE:3/8"=1'-0"

THIS DRAWING AND ALL INFORMATION THEREIN IS THE PROPERTY OF THE SOUTHERN BLEACHER COMPANY, MOB & SYHA AND IS CONFIDENTIAL AND MUST NOT BE MADE PUBLIC OR COPIED. THIS DRAWING IS LOANED SUBJECT TO RE-TURN UPON DEMAND AND, IS NOT TO BE USED DIRECTLY OR INDIRECTLY IN ANY WAY DETRIMENTAL TO OUR INTERESTS.

STRUCTURAL ENGINEERS
TAYLOR & SYFAN
CENTRAL OFFICE
553 S. Oak Knoll Ave. Pasadena, CA 91101
Ph: (626) 792-7458
Fax: (626) 792-3881
FOR JOBS: (877) 379-3881
http://www.tsinaturist.com/

Southern® BLEACHER COMPANY
GRANDSTANDS •BLEACHERS •STADIUMS
PO Box One, Graham, Texas 76450
801 Fifth Street
Phone: 940/549-0733 Fax: 940/540-1365
Established 1946

REGISTERED PROFESSIONAL ENGINEER
BRIAN T. DEAN
S 6087
STRUCTURAL
STATE OF CALIFORNIA
S&S 06/17/26
PRINCIPAL

TYPE: EXITS
SIZE: 12" RISE X 25" TREAD / 174'-0" (10 ROWS)

REV	BY	DATE	DESCRIPTION

DATE 02/09/26 | DRAWN JOA | CHECKED DMC

JOB NUMBER #26011R2

SHEET B36 | OF B43

PARLIER UNIFIED SCHOOL DISTRICT
PARLIER HIGH SCHOOL
PARLIER, CALIFORNIA

22" X 34" (11x17 = 1/2 indicated scale)

26011R2

CBC 2022:
PROVIDE 0.08" WIDTH PER SEAT FOR AISLES & STAIRS:
EQUIVALENT TO 150 PEOPLE PER FOOT.
PROVIDE 0.06" WIDTH PER SEAT FOR RAMPS:
EQUIVALENT TO 200 PEOPLE PER FOOT.

▯ 312 "L" BRACKETS (12 X 25 JIG)
(*) SEATING PER SECTION

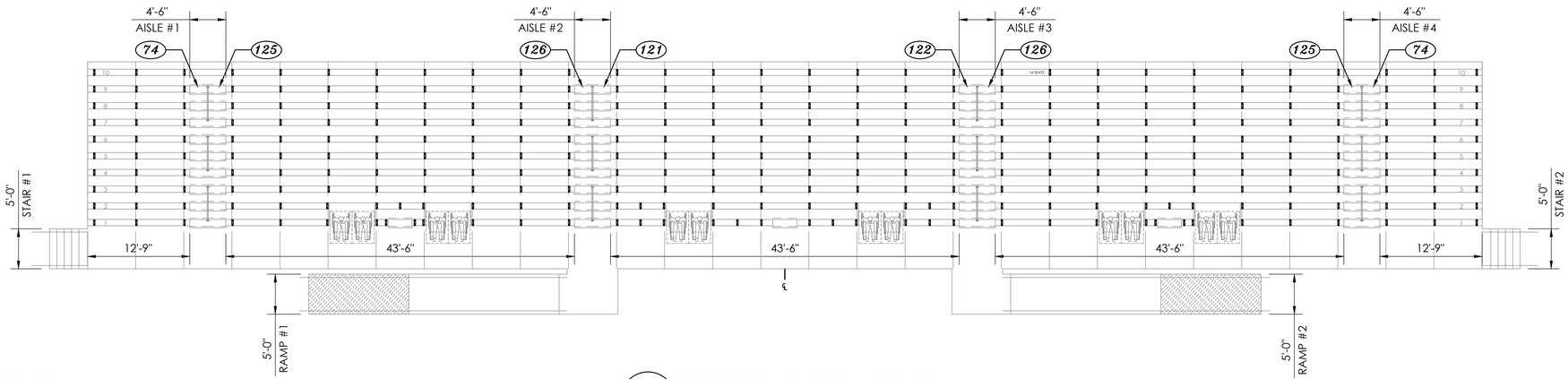

1 B37 SEAT BRACKET LAYOUT
SCALE:1/8"=1'-0"

AISLE ACCESSWAY (DEAD END AISLE):
25" TREAD DEPTH
CLEAR WIDTH = DEPTH (25") LESS SEAT WIDTH (9.5") = 15.5"
10 SEATS FIRST 12" CLEAR = 10 SEATS
0.3" EACH ADDITIONAL SEAT: 15.5"-12" / 0.6" = 5 SEATS
MAXIMUM SEATS BETWEEN AISLES: 15 SEATS
MAXIMUM WIDTH BETWEEN AISLES: 15 X 1.5' / SEAT = 22'-6"
MAXIMUM ROW LENGTH SHOWN = 12'-9"

AISLE ACCESSWAY (SEATING EACH SIDE):
25" TREAD DEPTH
CLEAR WIDTH = DEPTH (25") LESS SEAT WIDTH (9.5") = 15.5"
21 SEATS FIRST 12" CLEAR = 21 SEATS
0.3" EACH ADDITIONAL SEAT: 15.5"-12" / 0.3" = 11 SEATS
MAXIMUM SEATS BETWEEN AISLES: 32 SEATS
MAXIMUM WIDTH BETWEEN AISLES: 32 X 1.5' / SEAT = 48'-0"
MAXIMUM ROW LENGTH SHOWN = 43'-6"

AISLE WIDTH CALCULATIONS OPEN AIR STRUCTURE:
AISLE #1 & #4
REQUIRED AISLE WIDTH = 199 SEATS X 0.08" PER SEAT = 1'-3 15/16"
<4'-0" CODE MINIMUM <4'-6" PROVIDED - OK

AISLE #2
REQUIRED AISLE WIDTH = 247 SEATS X 0.08" PER SEAT = 1'-7 3/4"
<4'-0" CODE MINIMUM <4'-6" PROVIDED - OK

AISLES #3
REQUIRED AISLE WIDTH = 248 SEATS X 0.08" PER SEAT = 1'-7 13/16"
<4'-0" CODE MINIMUM <4'-6" PROVIDED - OK

EXIT WIDTH CALCULATIONS:
STAIRS #1 & #2 @ 5'-0" = 10'-0" / 10'-0" TOTAL STAIR EXIT WIDTH

RAMPS #1 & #2 @ 5'-0" = 10'-0" / 10'-0" TOTAL RAMP EXIT WIDTH

STAIR EXIT CAPACITY
10'-0" X 150 PEOPLE PER FOOT = 1500 STAIR EXIT CAPACITY FURNISHED
RAMP EXIT CAPACITY
10'-0" X 200 PEOPLE PER FOOT = 2000 RAMP EXIT CAPACITY FURNISHED
3500 TOTAL EXIT CAPACITY
(ACTUAL CAPACITY 995)

NOTE:
ALL DIMENSIONS SHOWN ON SEAT BRACKET LAYOUT
ARE TO/FROM THE WELDED EDGE OF THE BRACKET

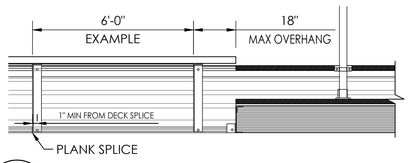

2 B37 SEAT BRACKET SPACING
NOT TO SCALE

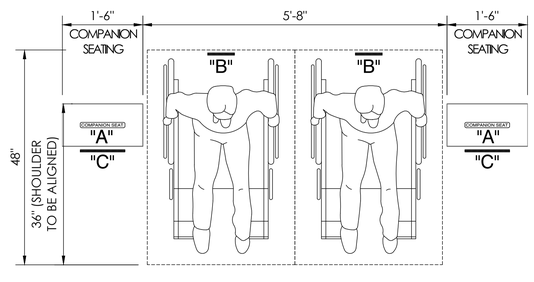

3 B37 SIGN DETAIL
NOT TO SCALE

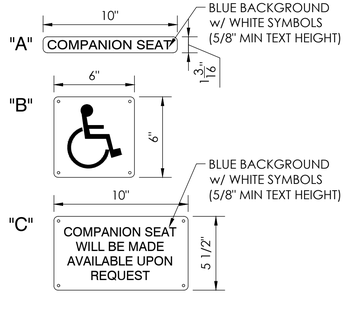

SIGNAGE TYP. @ WHEELCHAIR AREAS
A = COMPANION: 1 3/16" X 10" PLASTIC
B = ACCESSIBLE: 6" X 6" 0.040 ALUM.
C = COMPANION: 5 1/2" X 10" 0.040 ALUM.

THIS DRAWING AND ALL INFORMATION THEREIN IS THE PROPERTY OF THE SOUTHERN BLEACHER COMPANY, MOBILE, ALABAMA AND IS CONFIDENTIAL AND MUST NOT BE MADE PUBLIC OR COPIED. THIS DRAWING IS LOANED SUBJECT TO RE-TURN UPON DEMAND AND, IS NOT TO BE USED DIRECTLY OR INDIRECTLY IN ANY WAY DETRIMENTAL TO OUR INTERESTS.

STRUCTURAL ENGINEERS
CONTACT: Scott Powell
OFFICE: Ph: (626) 793-7438
Fax: (626) 793-7487
Cell: (909) 379-3881
553 S. Oak Knoll Ave. Pasadena, CA 91101
http://www.tsmstructural.com/

TAYLOR & SYFAN
Southern®
BLEACHER COMPANY
GRANDSTANDS • BLEACHERS • STADIUMS
PO Box One, Graham, Texas 76450
801 Fifth Street
Phone: 940/549-0733 Fax: 940/549-1365
Established 1946

REGISTERED PROFESSIONAL ENGINEER
BRIAN T. DEAN
S 6087
STRUCTURAL
STATE OF CALIFORNIA
S&S 06/17/26
PRINCIPAL

REV	BY	DATE	DESCRIPTION

DATE 02/09/26 | DRAWN JOA | CHECKED DMC
JOB NUMBER #26011R2
SHEET B37 | OF B43

TYPE: SEAT BRAKET LAYOUT
12" RISE X 25" TREAD / 174'-0" (10 ROWS)
TITLE: PARLIER UNIFIED SCHOOL DISTRICT
PARLIER HIGH SCHOOL
PARLIER, CALIFORNIA

22" X 34" (1:1x17 = 1/2 indicated scale)

26011R2

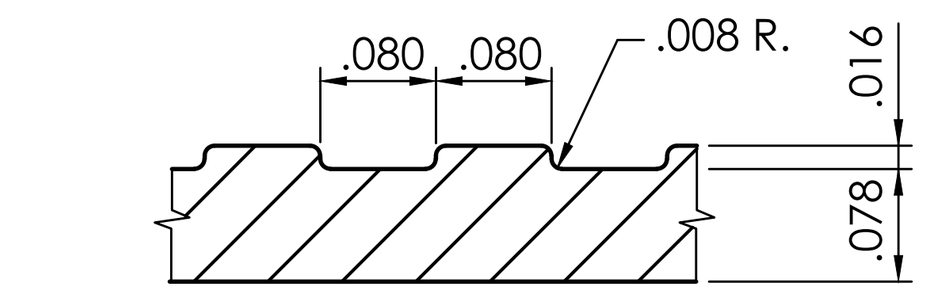

NOTE: TYPICAL FOR ALL PLANKS.

1 / B38 — FLUTED SURFACE DETAIL
NOT TO SCALE

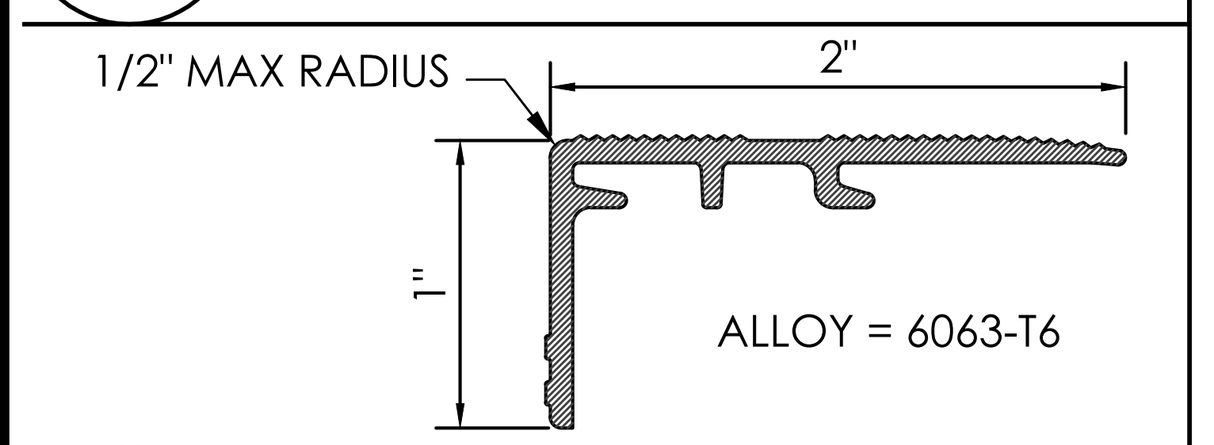

2 / B38 — ALUMINUM AISLE NOSING
NOT TO SCALE

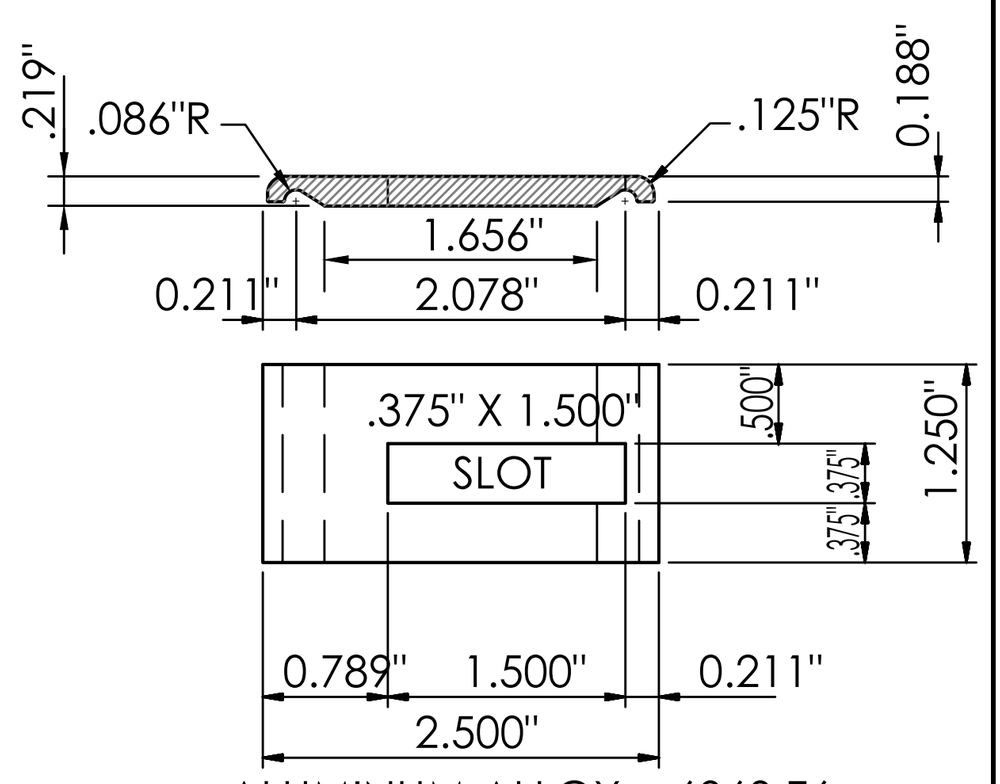

ALUMINUM ALLOY = 6063-T6
EST. AREA = .488 SQ. IN.
EST. WT/FT. = .586 LB.
EST. PERIMETER = 5.427 IN.

3 / B38 — HOLD DOWN CLIP DETAIL
NOT TO SCALE

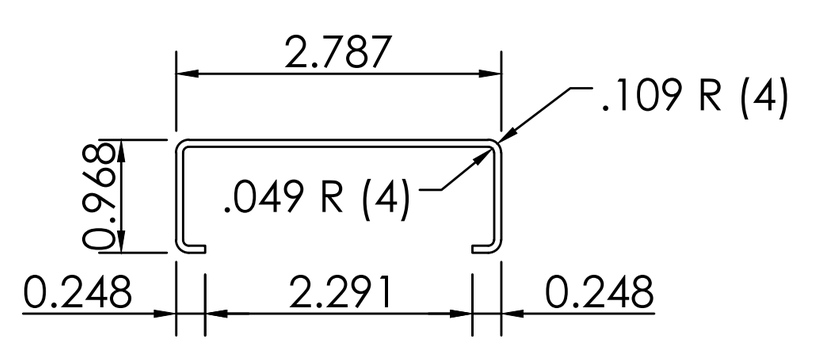

ALUMINUM JOINT SLEEVE
.060 WALL , 0.337#/FT.
1. Ix = .031 IN. e-4
2. MATERIAL - 6063 T-6
3. MIN. MAT. PROP. - 25000 PSI
4. E = 10,000,000 PSI
5. C = .699 IN.

4 / B38 — ALUMINUM JOINT SLEEVE DETAIL
NOT TO SCALE

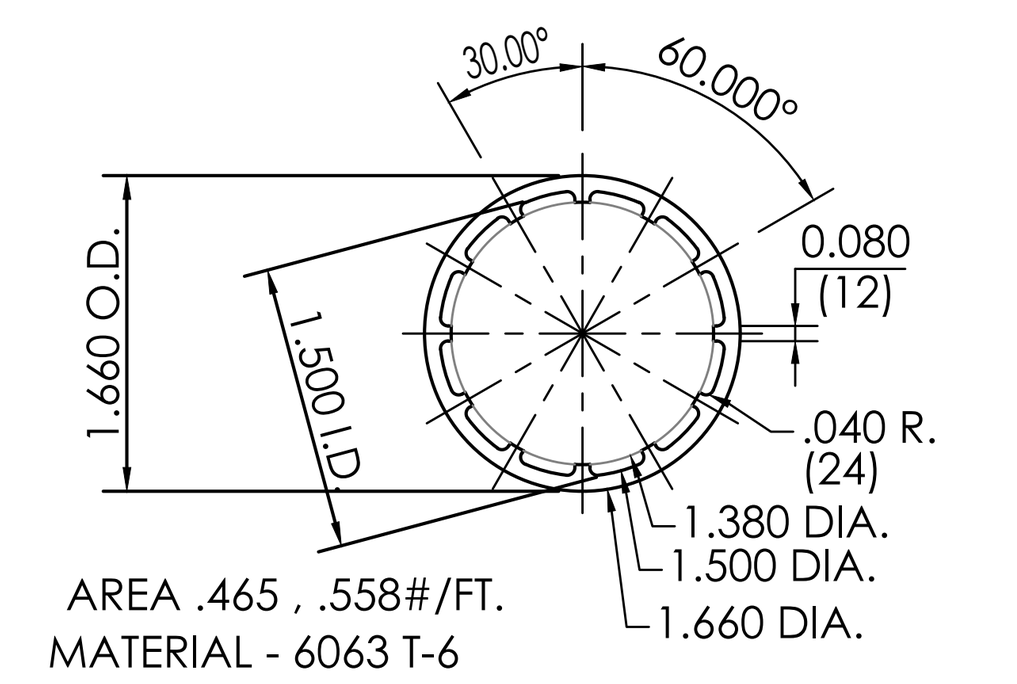

AREA .465 , .558#/FT.
MATERIAL - 6063 T-6

5 / B38 — 1 5/8" O.D. ALUMINUM RAIL DETAIL
NOT TO SCALE 6063 T6

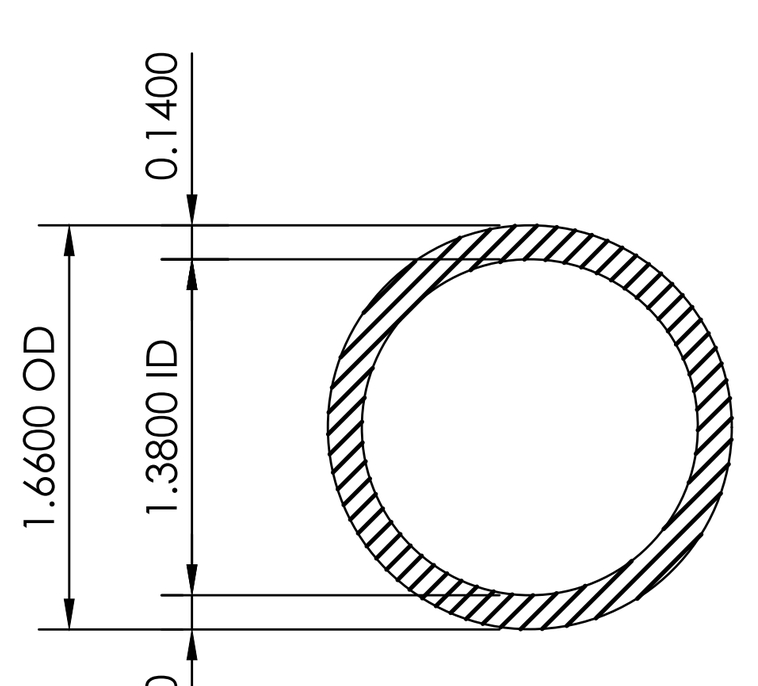

1. MATERIAL - 6061 T-6

6 / B38 — SCHED. 40 ALUMINUM PIPE DETAIL
NOT TO SCALE

NOTE: PLANK SHOWN IN DETAIL IS A 2X10. ALL OTHER PLANK USED SHALL BE SIMILAR.

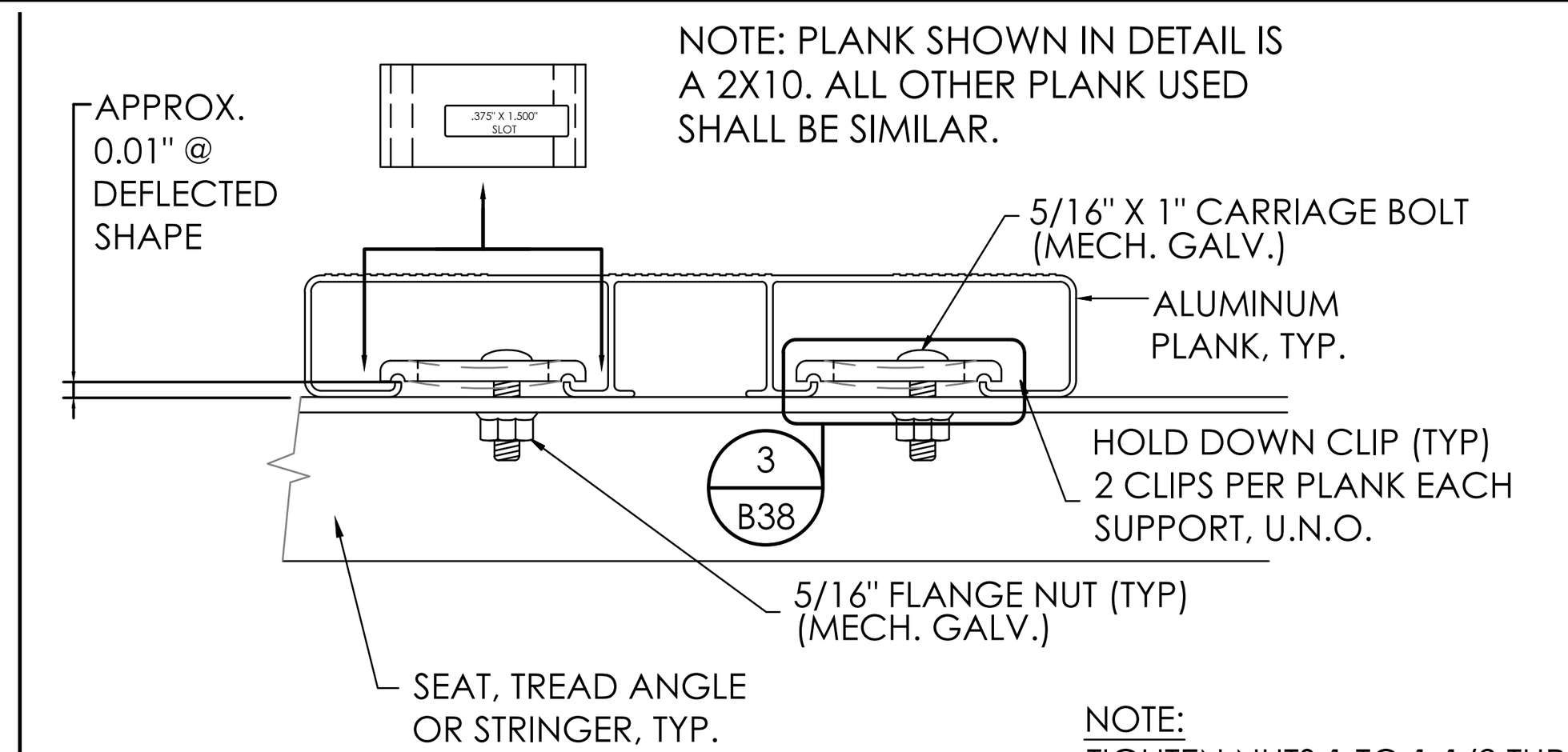

NOTE:
TIGHTEN NUTS 1 TO 1-1/2 TURNS FROM SNUG -OR- 15 FT-LB TORQUE -OR- UNTIL CLIP IS PARTIALLY DEFLECTED AND OBSERVED TO BE IN CONTACT WITH OR WITHIN 0.01" OF CONTACT WITH STRUCTURE BELOW.

7 / B38 — PLANK INSTALLATION DETAIL
NOT TO SCALE

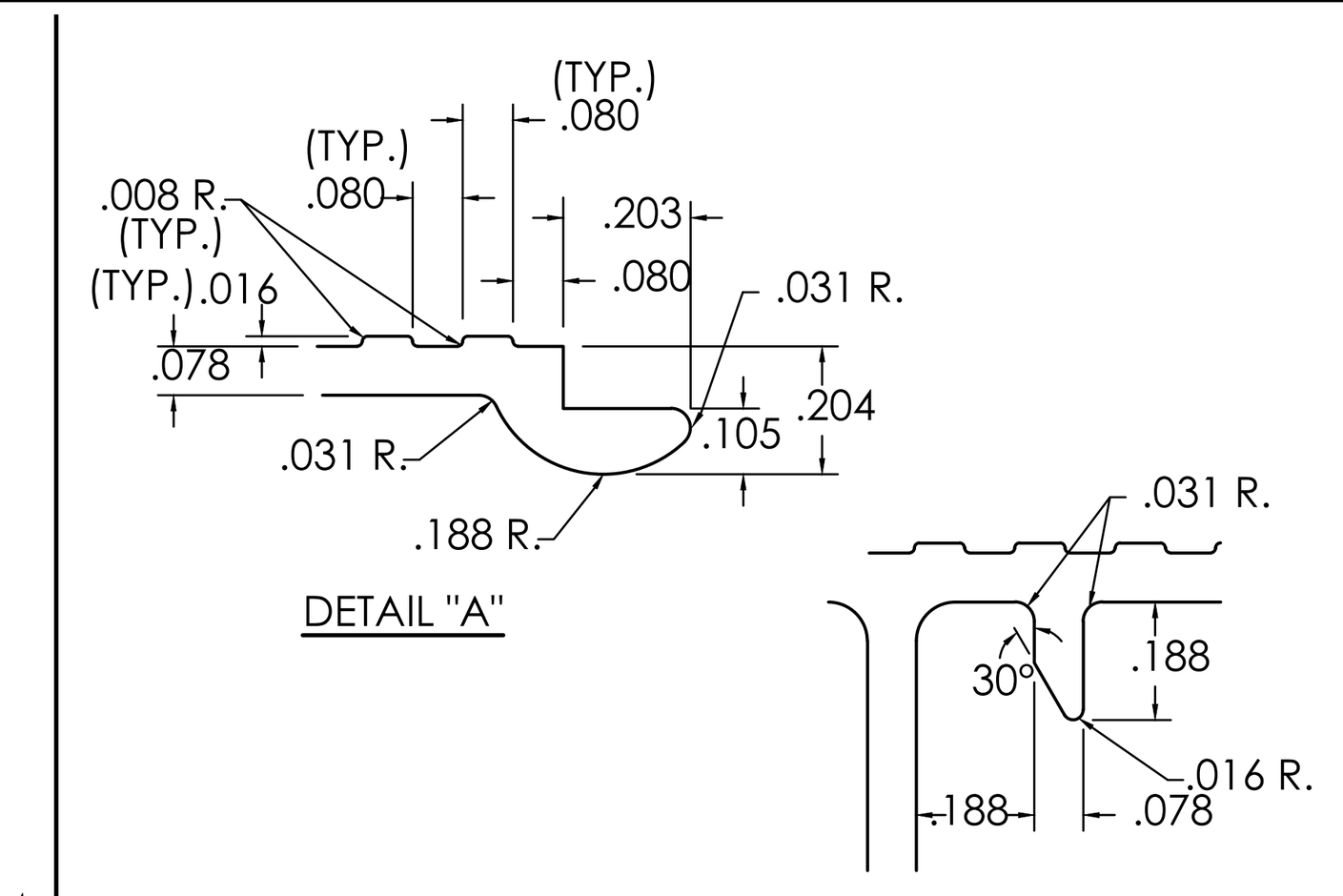

8 / B38 — INTERLOCK PLANK DETAIL
NOT TO SCALE

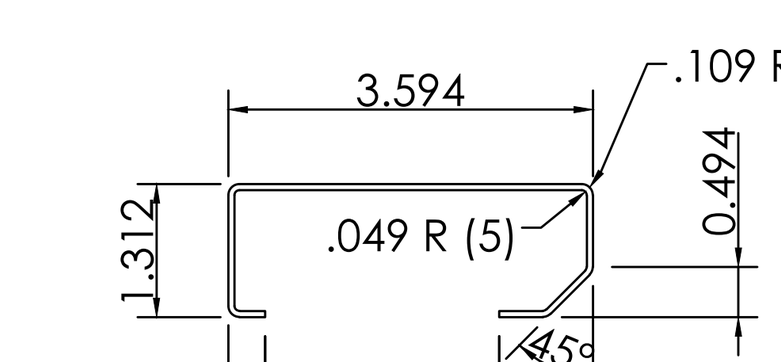

STANDARD ALUMINUM PLANK SLEEVE
.060 WALL , 0.497#/FT.
1. Ix = .097 IN. e-4
2. MATERIAL - 6063 T-6
3. MIN. MAT. PROP. - 25000 PSI
4. E = 10,000,000 PSI
5. C = .891 IN.

9 / B38 — STANDARD ALUMINUM PLANK SLEEVE
NOT TO SCALE

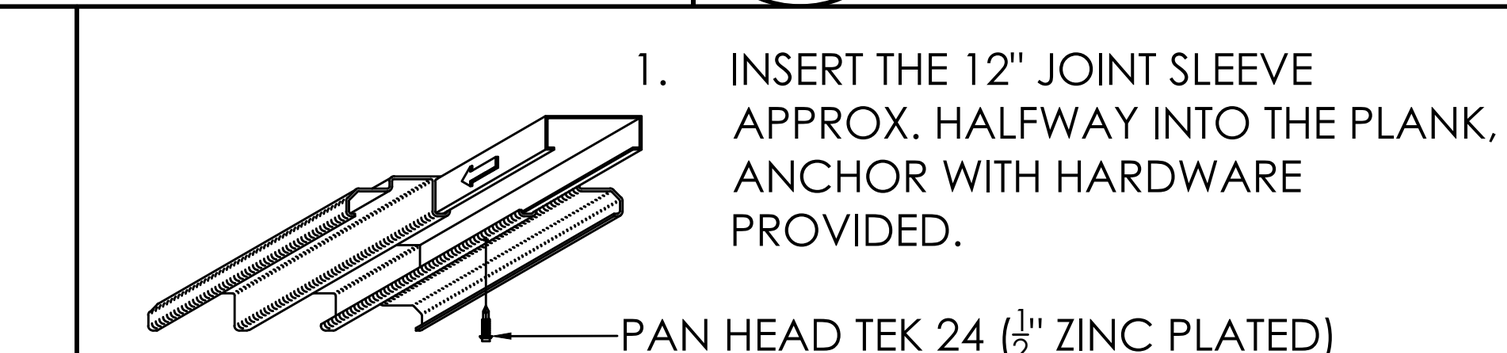

1. INSERT THE 12" JOINT SLEEVE APPROX. HALFWAY INTO THE PLANK, ANCHOR WITH HARDWARE PROVIDED.
2. SLIDE THE END OF THE NEXT PLANK OVER THE JOINT SLEEVE UNTIL THE PLANKS ARE SNUG AGAINST EACH OTHER. **DO NOT** ANCHOR THIS PLANK TO THE JOINT SLEEVE.

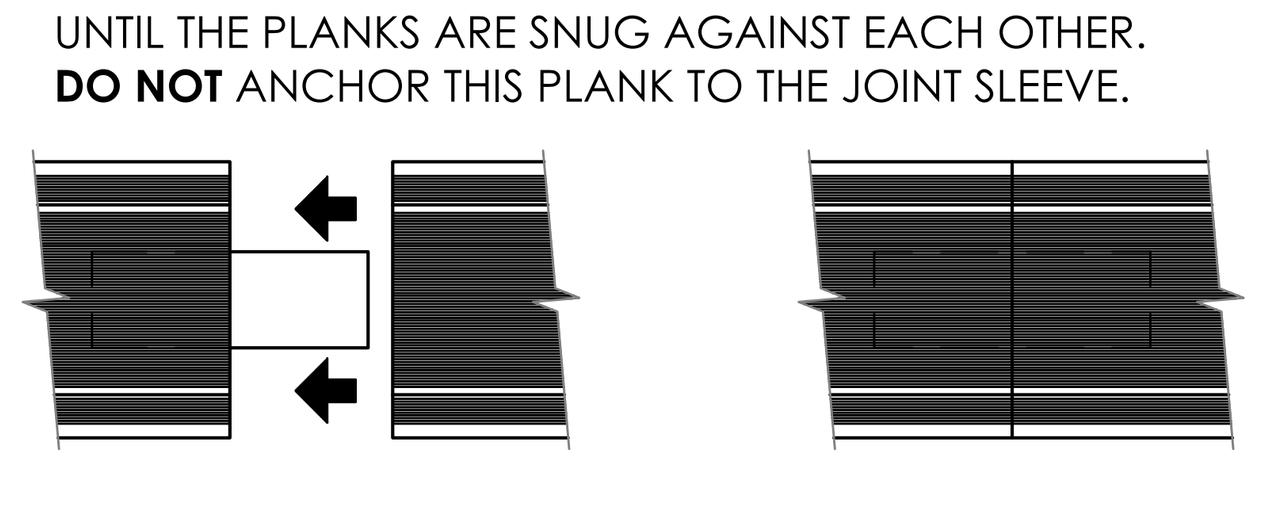

10 / B38 — RISER JOINT SLEEVE INSTALLATION DETAIL
NOT TO SCALE

1. LOCATE THE END CAP AS SHOWN. (WITH WIDEST FLANGE ON BOTTOM FOR CHANNEL E.C., AND NARROW FLANGE ON TOP FOR ANGLE E.C.)
2. MECHANICALLY FASTEN THROUGH BOTTOM FLANGE OF CHANNEL E.C., AND TOP FLANGE OF ANGLE E.C. (CHANNEL E.C. SHOULD BE TAPPED INTO PLACE WITH A RUBBER MALLET AS NECESSARY).

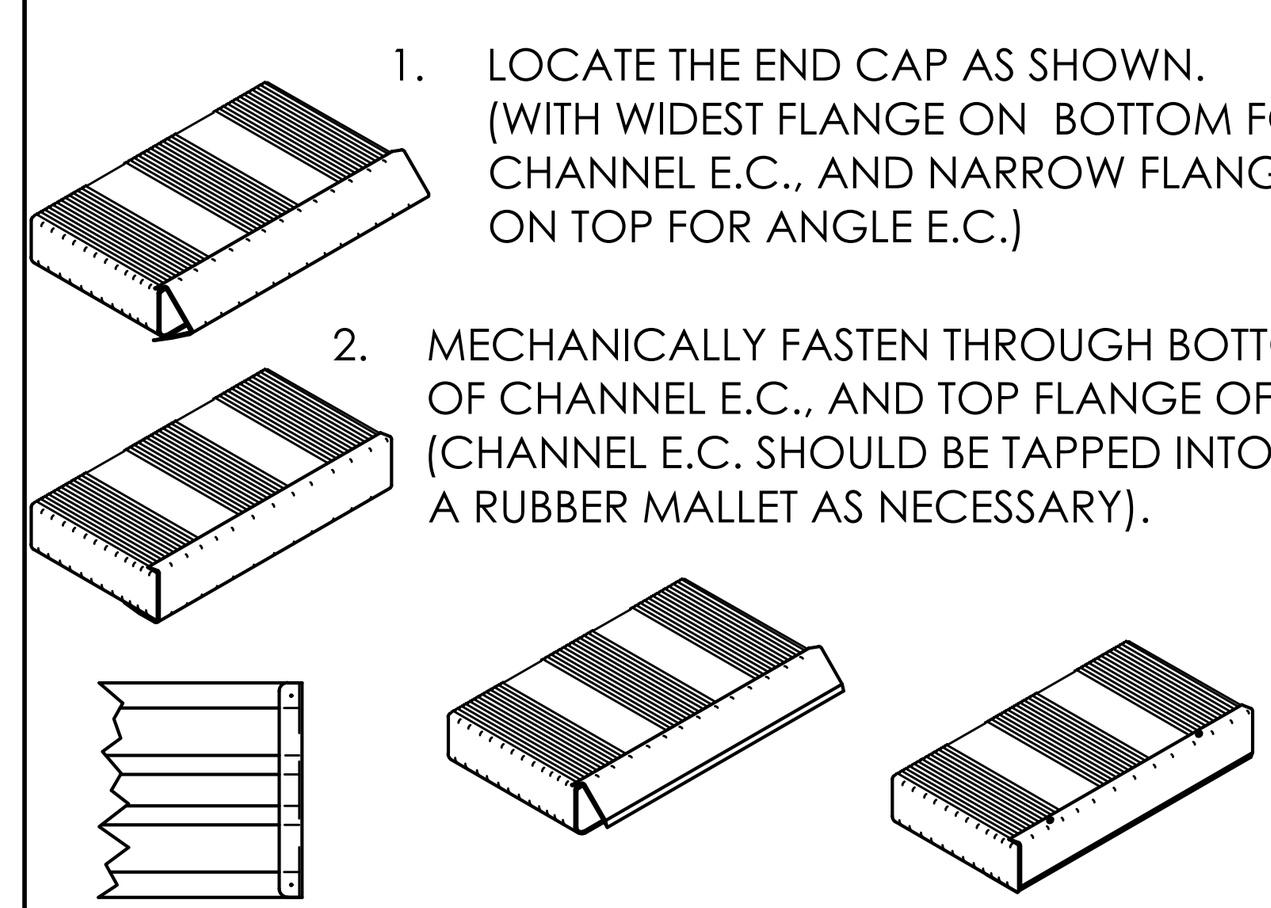

11 / B38 — ENDCAP INSTALLATION DETAIL
NOT TO SCALE

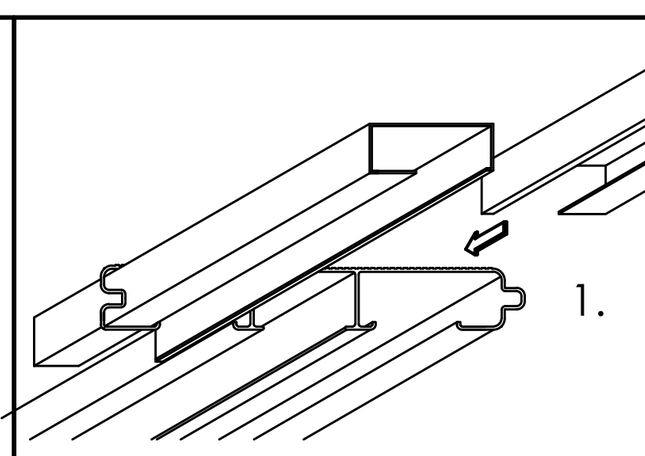

1. INSERT THE TWIN JOINT SLEEVES APPROX. HALFWAY INTO THE PLANK, STAGGERED ½"±. ANCOR WITH #24 TEK SCREW.
2. SLIDE THE END OF THE NEXT PLANK OVER THE TWIN JOINT SLEEVES UNTIL THE PLANKS ARE SNUG AGAINST EACH OTHER. **DO NOT** ANCHOR THIS PLANK TO THE TWIN JOINT SLEEVES.

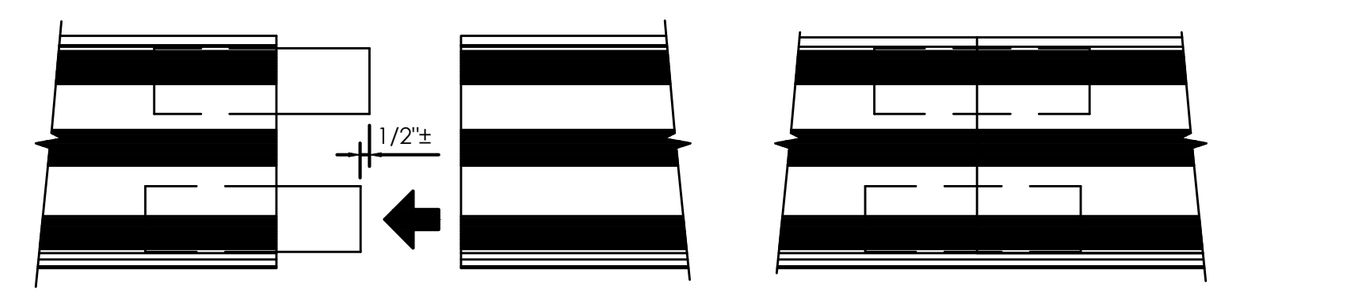

12 / B38 — TONGUE & GROOVE JOINT SLEEVE INSTALLATION DETAIL
NOT TO SCALE

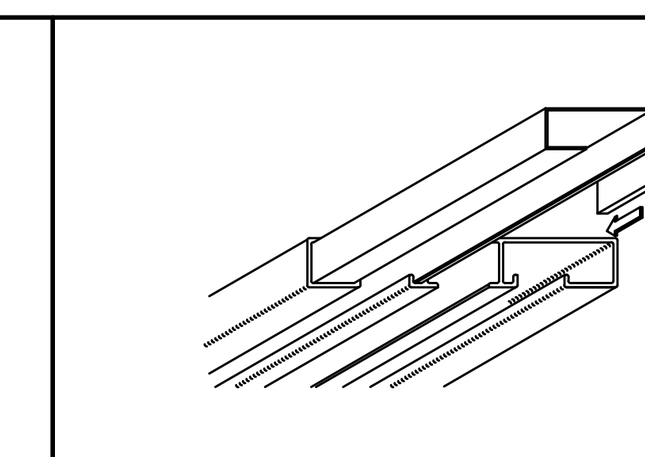

1. INSERT THE TWIN 12" JOINT SLEEVES APPROXIMATELY HALFWAY INTO THE PLANK, STAGGERED 1/2"±. ANCHOR WITH HARDWARE PROVIDED.
2. SLIDE THE END OF THE NEXT PLANK OVER THE TWIN JOINT SLEEVES UNTIL THE PLANKS ARE SNUG AGAINST EACH OTHER. DO NOT ANCHOR THIS PLANK TO THE TWIN JOINT SLEEVES.

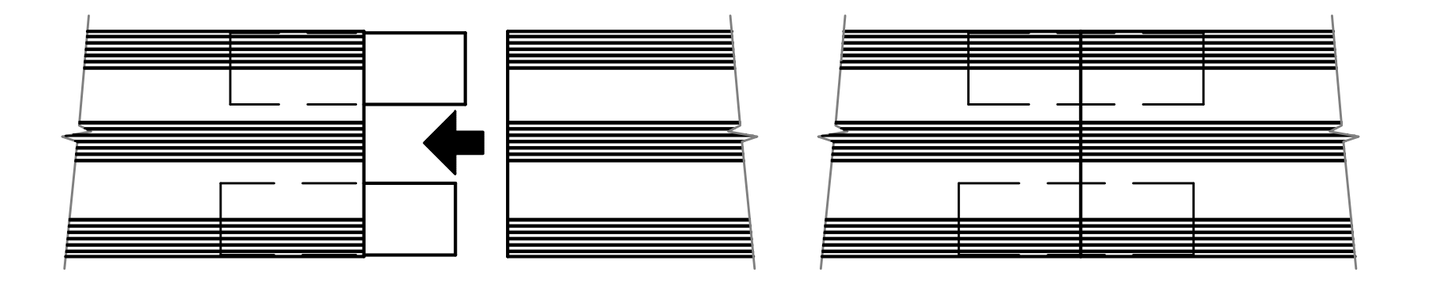

13 / B38 — JOINT SLEEVE INSTALLATION DETAIL
NOT TO SCALE

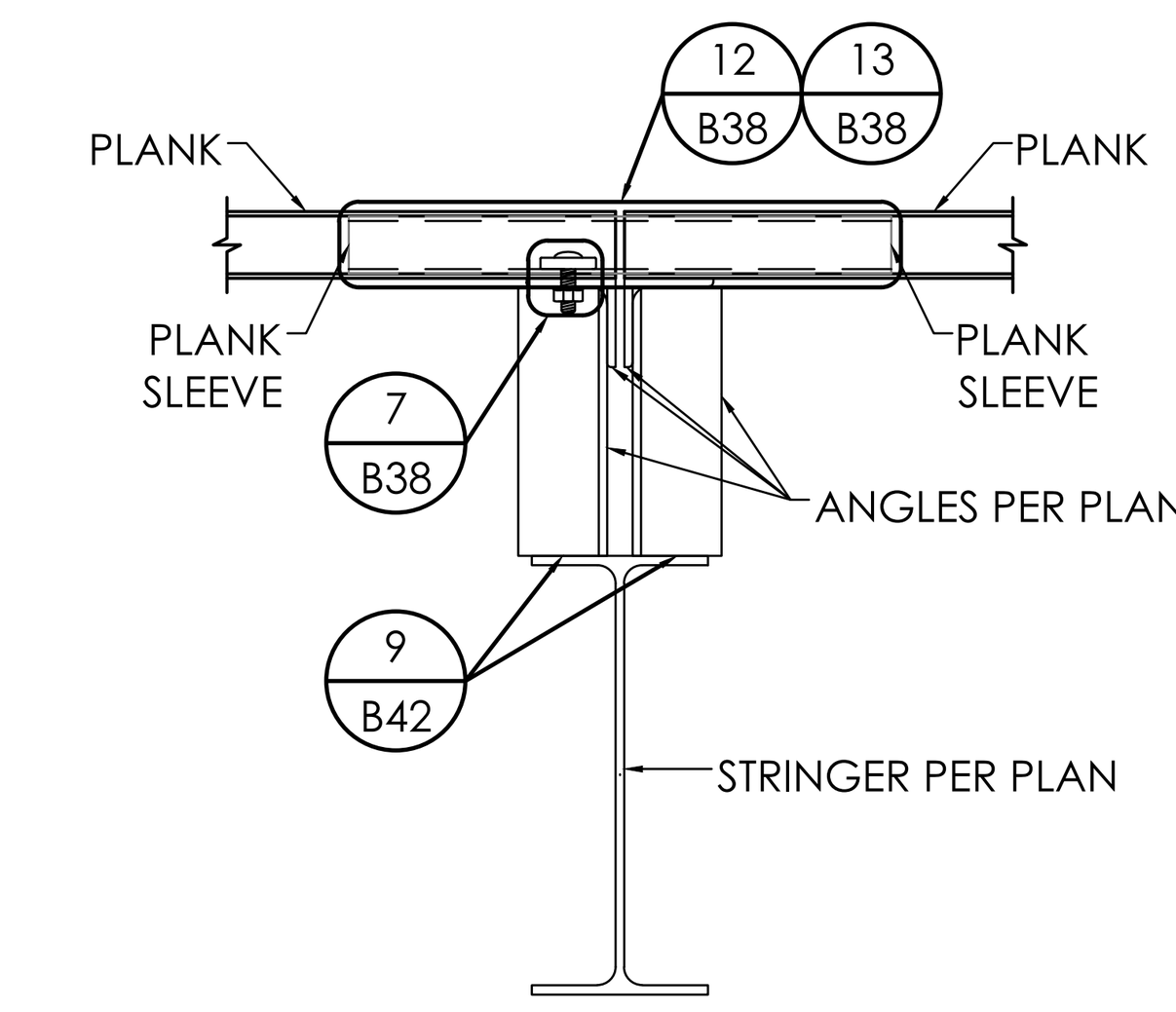

14 / B38 — PLANK SLEEVE ATTACHMENT
NOT TO SCALE

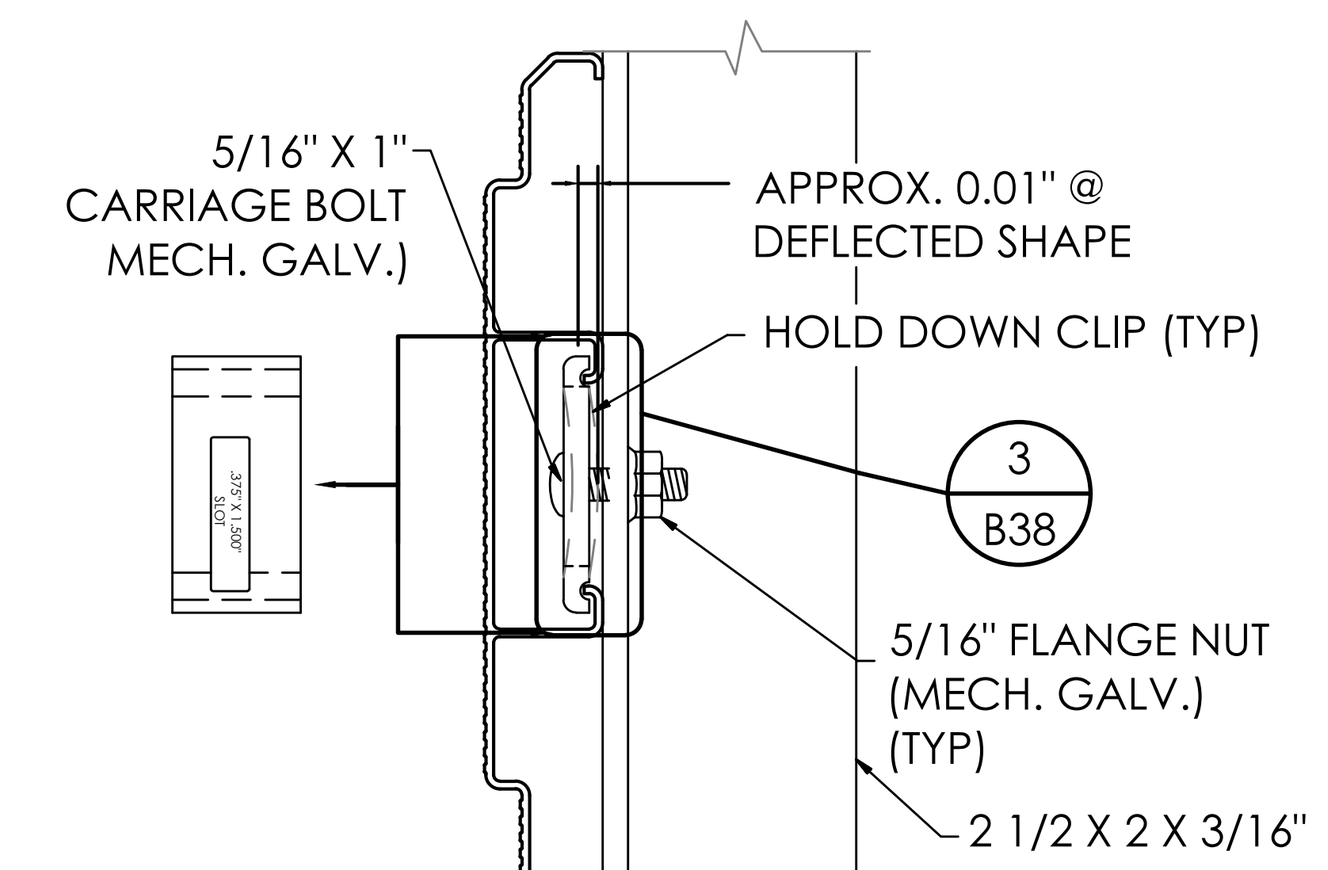

NOTE:
SNUG FLANGE NUT TO ATTACHMENT FIXTURE. TIGHTEN 1 TO 1 ½ TURNS TILL HOLDDOWN CLIP IS PARTIALLY DEFLECTED

15 / B38 — RISER BOARD FACADE INSTALLATION DETAIL
NOT TO SCALE

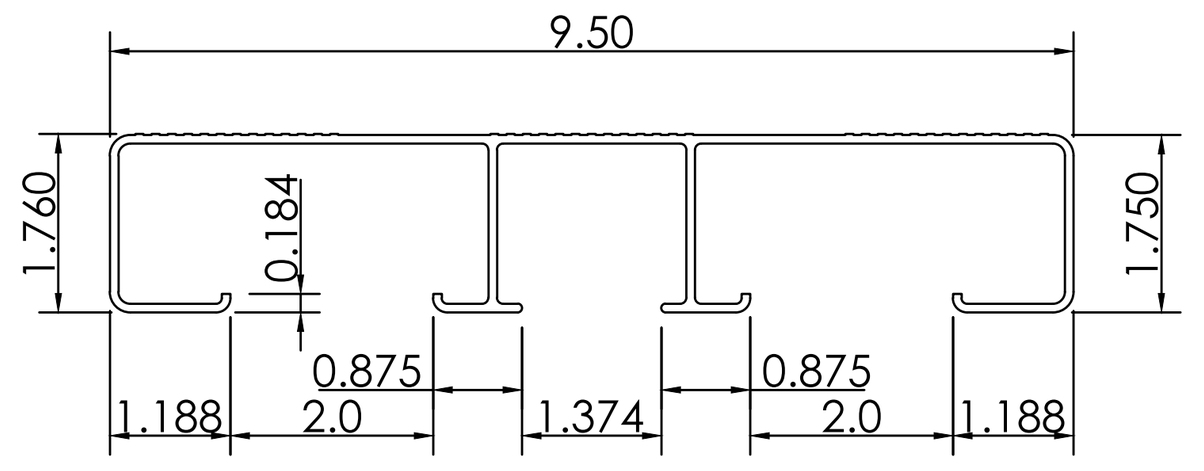

2X10 HEAVY ALUMINUM PLANK
.075 WALL , 1.769#/FT.
1. Ix = .843 IN. e-4
2. MATERIAL - 6063 T-6
3. MIN. MAT. PROP. - 25000 PSI
4. E = 10,000,000 PSI
5. C = 1.10 IN.

16 / B38 — 2 X 10 HEAVY ALUMINUM PLANK DETAIL
NOT TO SCALE

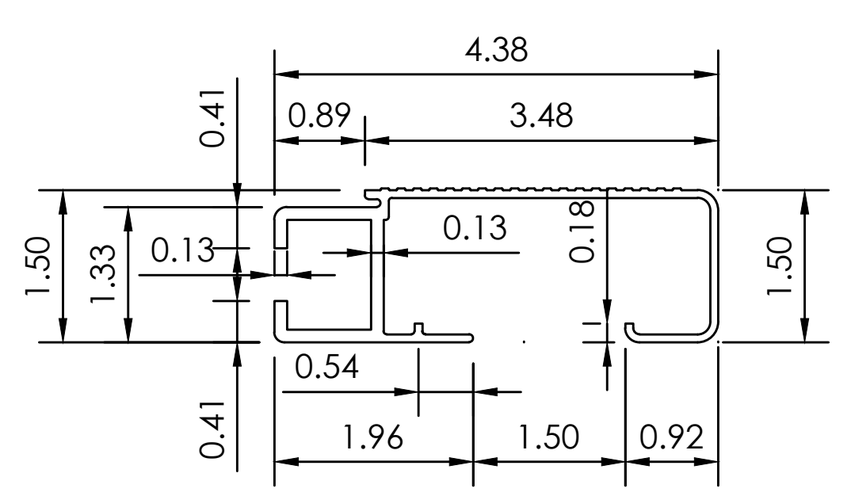

2X4 ALUMINUM KL STEP NOSE PLANK
.078 WALL , 1.555#/FT.
1. Ix = .650 IN. e-4
2. MATERIAL - 6063 T-6
3. MIN. MAT. PROP. - 25000 PSI
4. E = 10,000,000 PSI
5. C = .706 IN.

17 / B38 — 2 X 4.5 KL STEP NOSE PLANK DETAIL
NOT TO SCALE

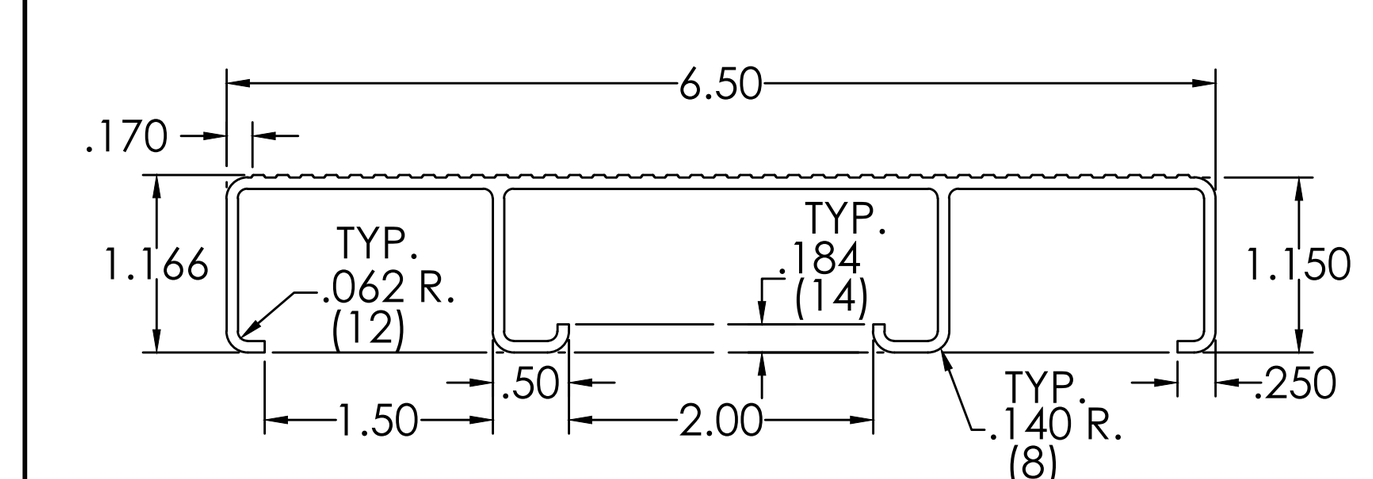

1X6 1/2 ALUMINUM TOE BOARD
.078 WALL , 1.132#/FT.
1. Ix = 0.154 in^4
2. MATERIAL - 6063 T-6
3. MIN. MAT. PROP. - 25000 PSI
4. E = 10,000,000 PSI
5. C = 0.8.22 in

18 / B38 — 1X6 1/2 ALUMINUM (VERT.) TOEBOARD PLANK DETAIL
NOT TO SCALE

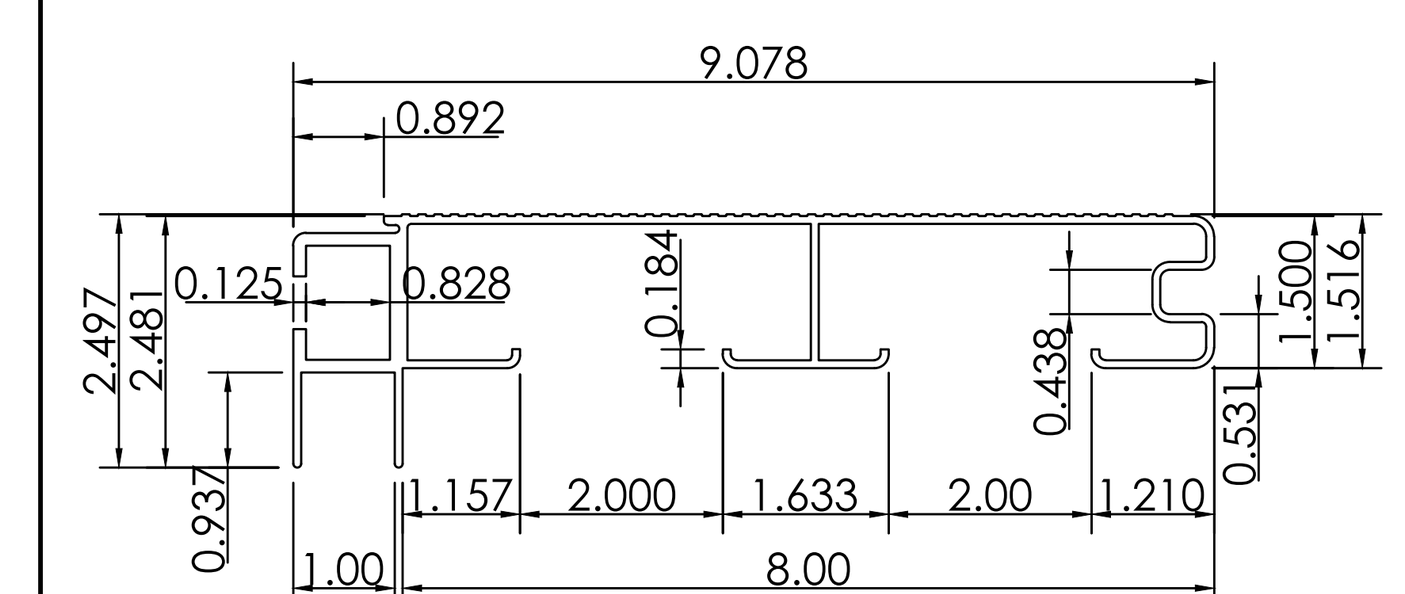

2X8 TONGUE & GROOVE NOSE PLANK
.078 WALL , 2.389#/FT.
1. Ix = .944 IN. e-4
2. MATERIAL - 6063 T-6
3. MIN. MAT. PROP. - 25000 PSI
4. E = 10,000,000 PSI
5. C = .768 IN.

19 / B38 — 2 X 8 TONGUE & GROOVE ALUMINUM NOSE PLANK DETAIL
NOT TO SCALE

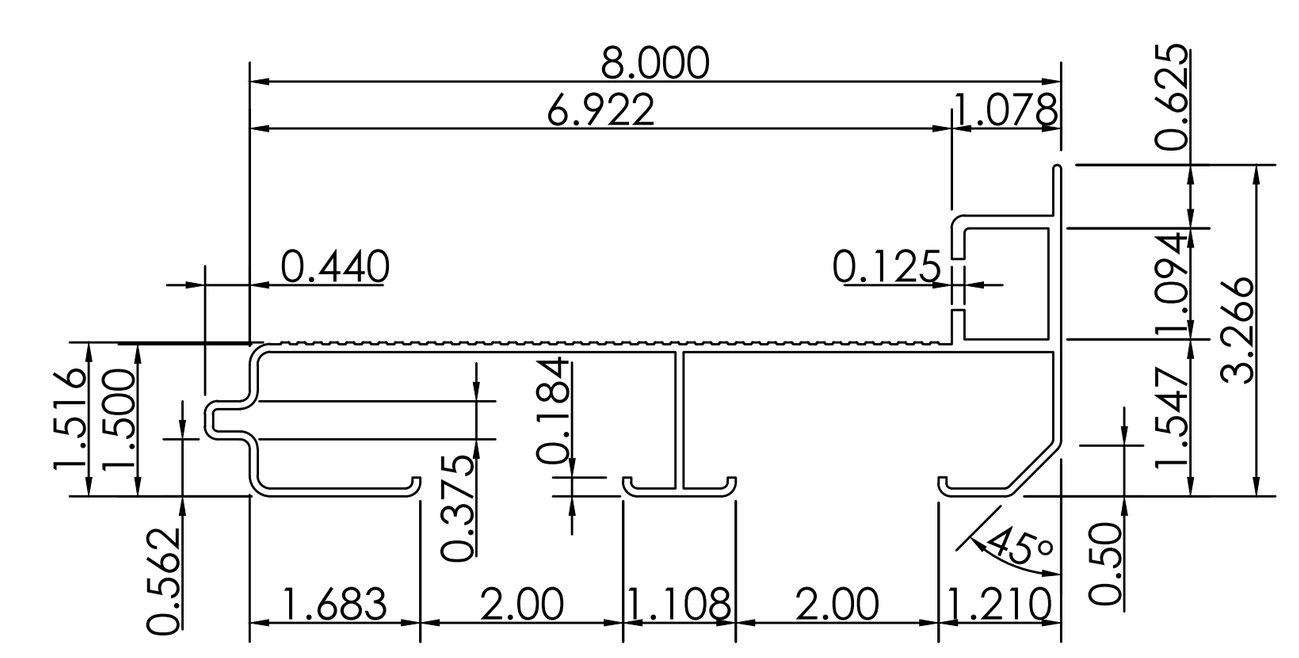

2X8 TONGUE & GROOVE HEEL PLANK
.078 WALL , 2.145#/FT.
1. Ix = 1.18 IN. e-4
2. MATERIAL - 6063 T-6
3. MIN. MAT. PROP. - 25000 PSI
4. E = 10,000,000 PSI
5. C = 1.28 IN.

20 / B38 — 2 X 8 TONGUE & GROOVE ALUMINUM HEEL PLANK DETAIL
NOT TO SCALE

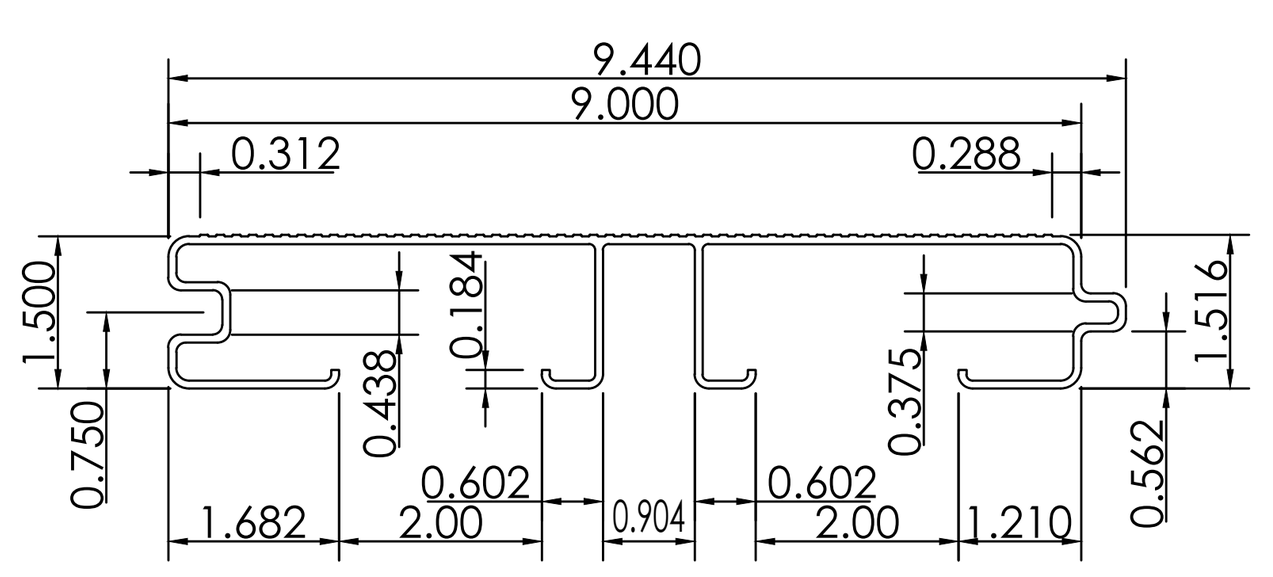

2X9 TONGUE & GROOVE PLANK
.078 WALL , 1.943#/FT.
1. Ix = .555 IN. e-4
2. MATERIAL - 6063 T-6
3. MIN. MAT. PROP. - 25000 PSI
4. E = 10,000,000 PSI
5. C = .945 IN.

21 / B38 — 2 X 9 ALUMINUM TONGUE & GROOVE PLANK DETAIL
NOT TO SCALE

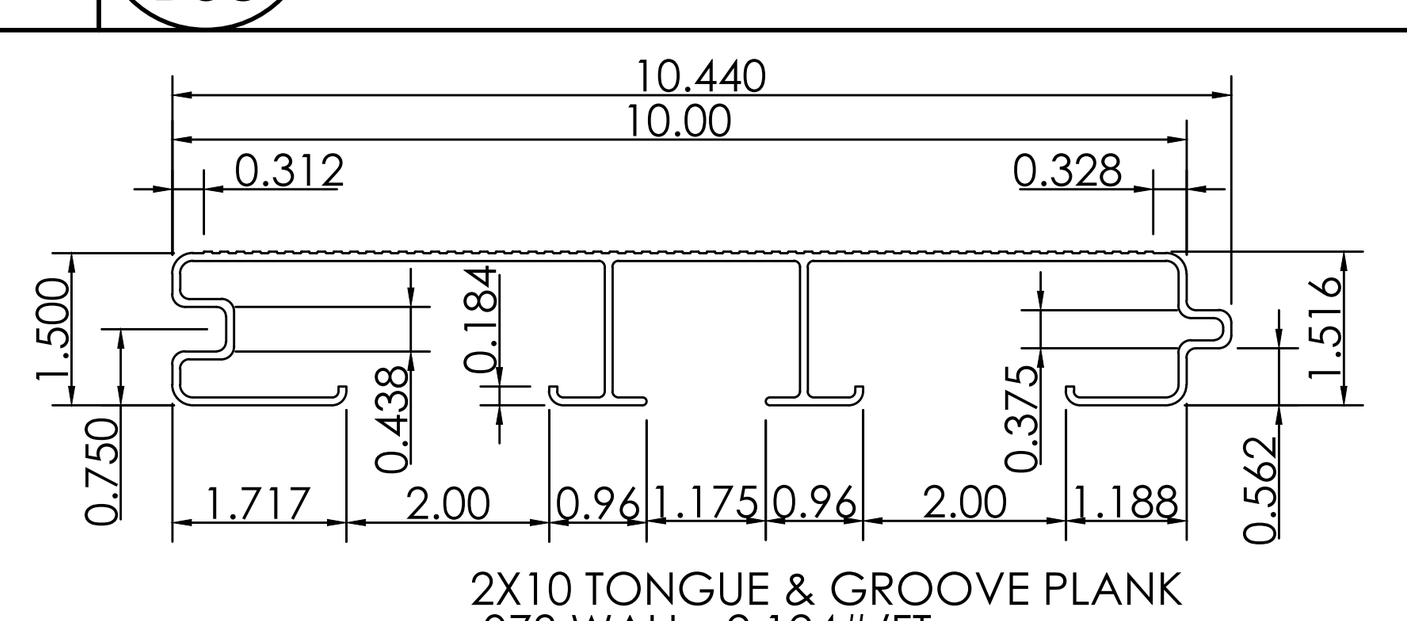

2X10 TONGUE & GROOVE PLANK
.078 WALL , 2.124#/FT.
1. Ix = .630 IN. e-4
2. MATERIAL - 6063 T-6
3. MIN. MAT. PROP. - 25000 PSI
4. E = 10,000,000 PSI
5. C = .937 IN.

22 / B38 — 2 X 10 ALUMINUM TONGUE & GROOVE PLANK DETAIL
NOT TO SCALE

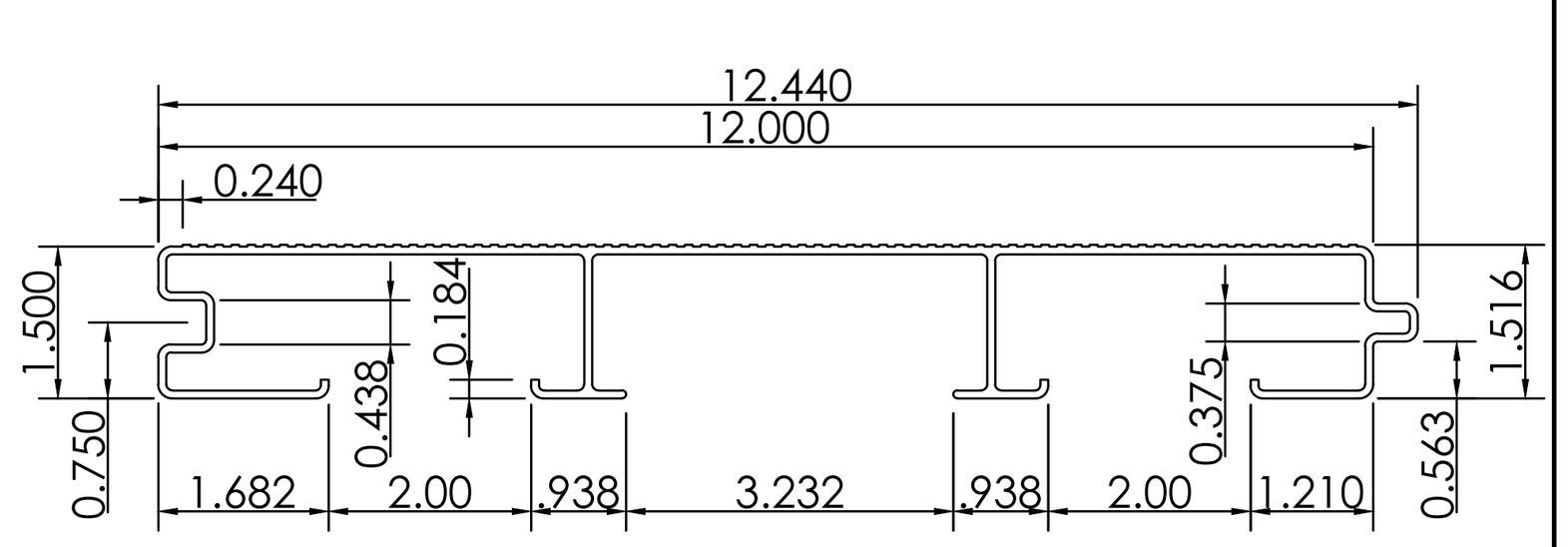

2X12 TONGUE & GROOVE PLANK
.078 WALL , 2.344#/FT.
1. Ix = .676 IN. e-4
2. MATERIAL - 6063 T-6
3. MIN. MAT. PROP. - 25000 PSI
4. E = 10,000,000 PSI
5. C = .986 IN.

23 / B38 — 2 X 12 ALUMINUM TONGUE & GROOVE PLANK DETAIL
NOT TO SCALE

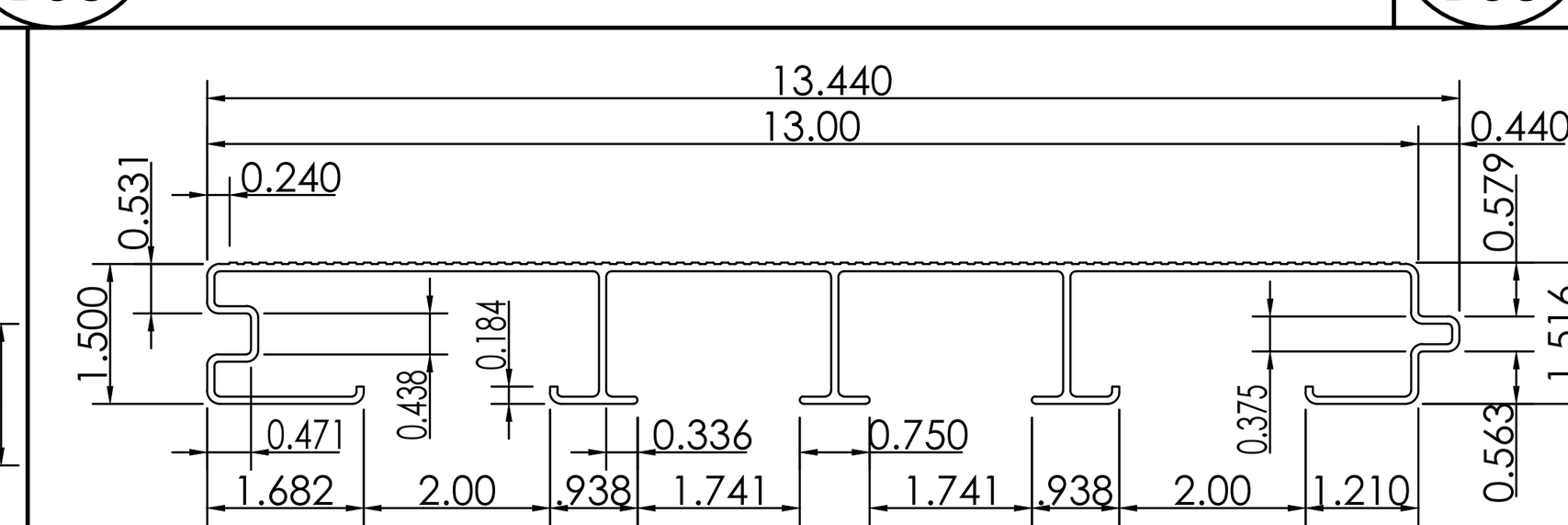

2X13 ALUMINUM TONGUE & GROOVE PLANK
.078 WALL , 3.040#/FT.
1. Ix = .769 IN. e-4
2. MATERIAL - 6063 T-6
3. MIN. MAT. PROP. - 25000 PSI
4. E = 10,000,000 PSI
5. C = .968 IN.

24 / B38 — 2 X 13 ALUMINUM TONGUE & GROOVE PLANK DETAIL
NOT TO SCALE

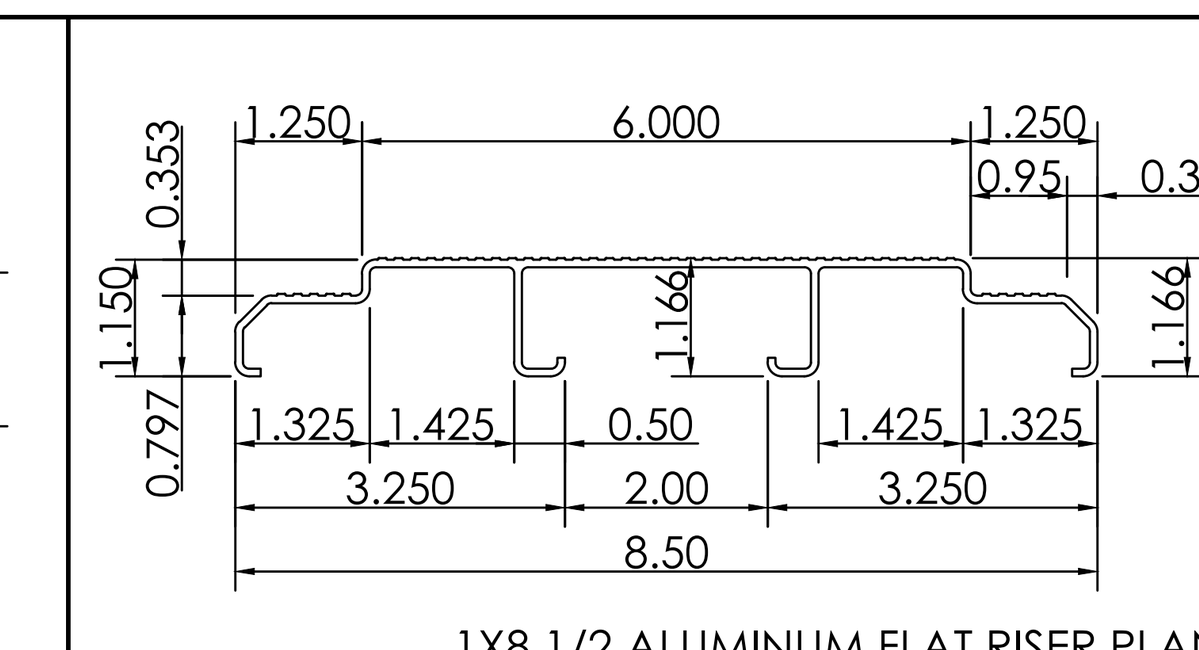

1X8 1/2 ALUMINUM FLAT RISER PLANK
.075 WALL , 1.283#/FT.
1. Ix = .151 IN. e-4
2. MATERIAL - 6063 T-6
3. MIN. MAT. PROP. - 25000 PSI
4. E = 10,000,000 PSI
5. C = .799 IN.

25 / B38 — 1 X 8 1/2 ALUMINUM FLAT RISER PLANK DETAIL
NOT TO SCALE

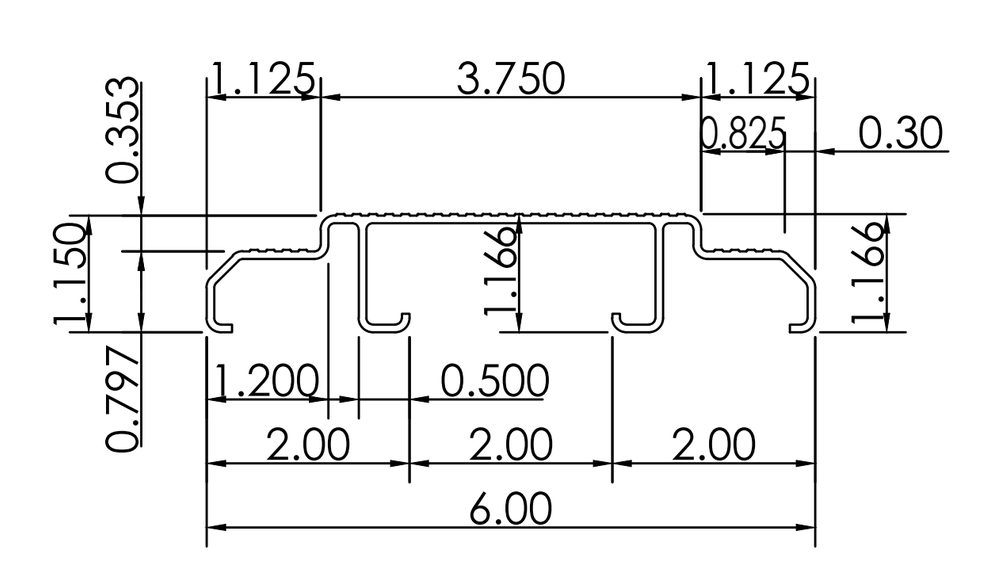

1X6 ALUMINUM FLAT RISER PLANK
.075 WALL , 1.033#/FT.
1. Ix = .128 IN. e-4
2. MATERIAL - 6063 T-6
3. MIN. MAT. PROP. - 25000 PSI
4. E = 10,000,000 PSI
5. C = .731 IN.

26 / B38 — 1 X 6 ALUMINUM FLAT RISER PLANK DETAIL
NOT TO SCALE

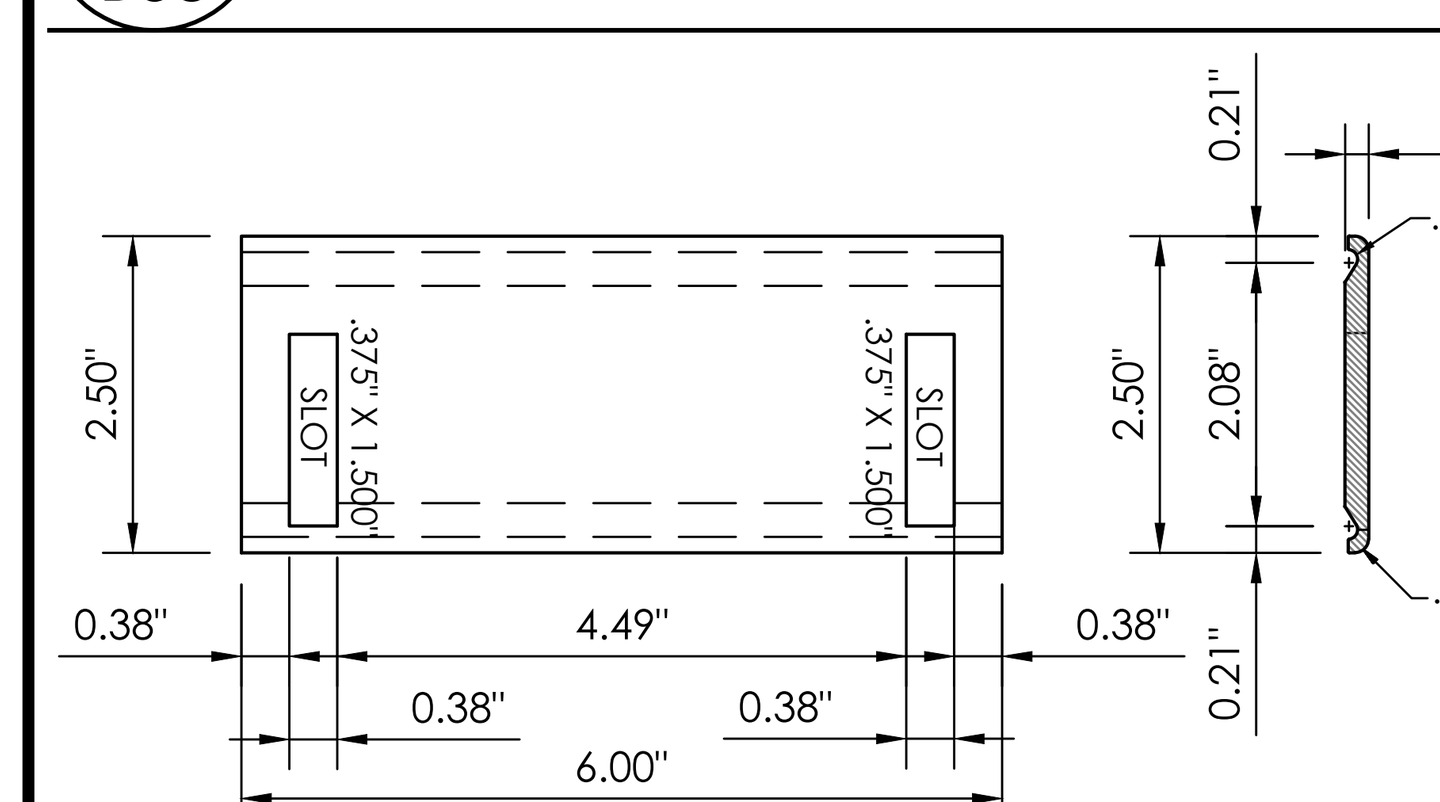

ALUMINUM ALLOY = 6063-T6

27 / B38 — 6" HOLD DOWN CLIP DETAIL
NOT TO SCALE

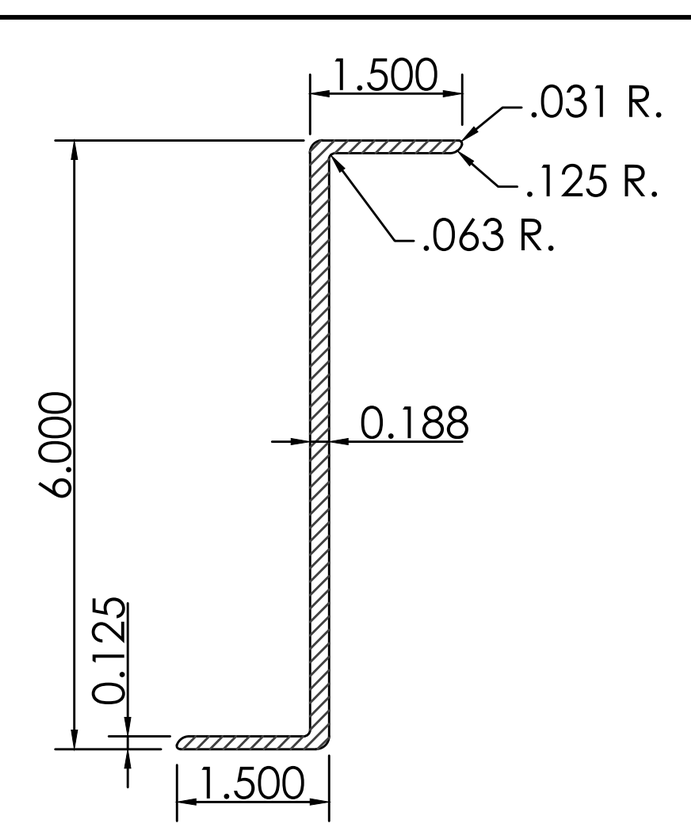

ALLOY = 6061-T6
ESTIMATED AREA = 1.445 SQ. IN.
ESTIMATED WEIGHT PER FT. = 1.734 LBS.
ESTIMATED PERIMETER = 17.34 IN.

28 / B38 — 6" ALUMINUM "Z" BRACKET DETAIL
NOT TO SCALE

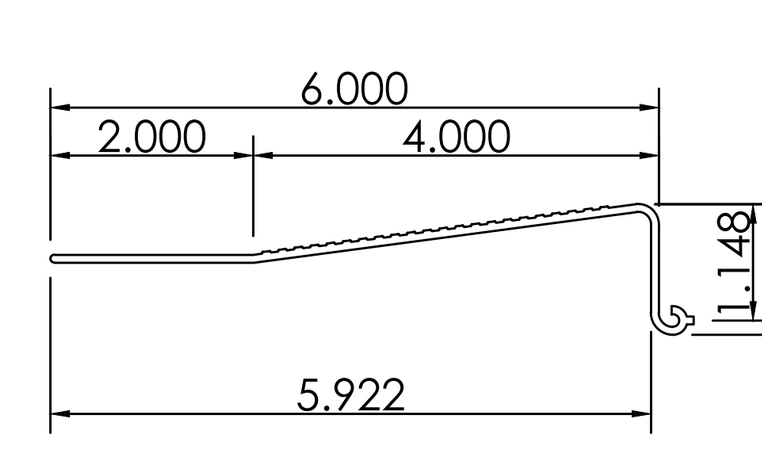

6" ALUMINUM STEP RISER PLANK
.078 WALL , 0.748#/FT.

29 / B38 — 6" ALUMINUM STEP RISER PLANK DETAIL
NOT TO SCALE

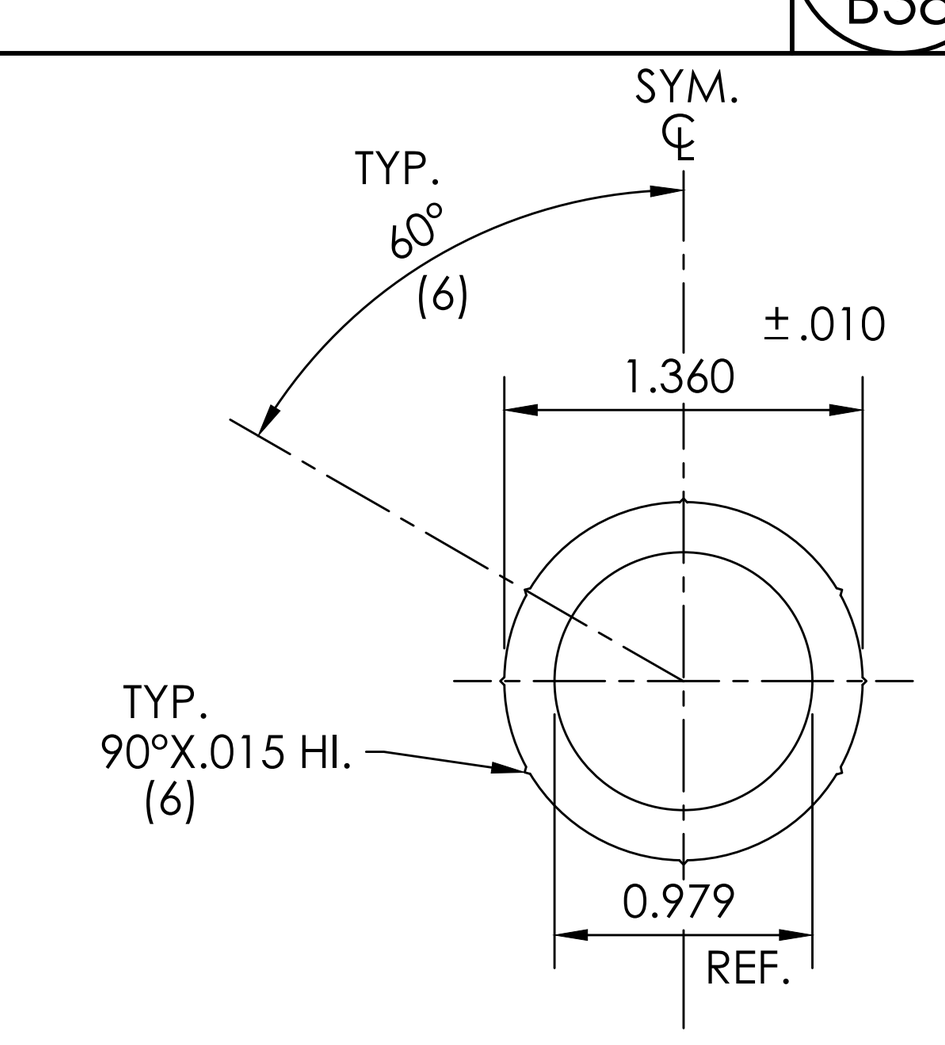

PLANE PROPERTIES:
AREA= .70445 sq. in.

SECTION PROPERTIES:
MOMENT OF INERTIA: 8.9114 in^4
SECTION MODULUS: 2.1089 in^3
RADIUS OF GYRATION: 3.5573 in

ALLOY = 6063-T6
ESTIMATED WEIGHT PER FT. = 0.827 LBS.
ESTIMATED WALL THICKNESS = .191 IN.

30 / B38 — REINFORCING SLEEVE DETAIL
NOT TO SCALE

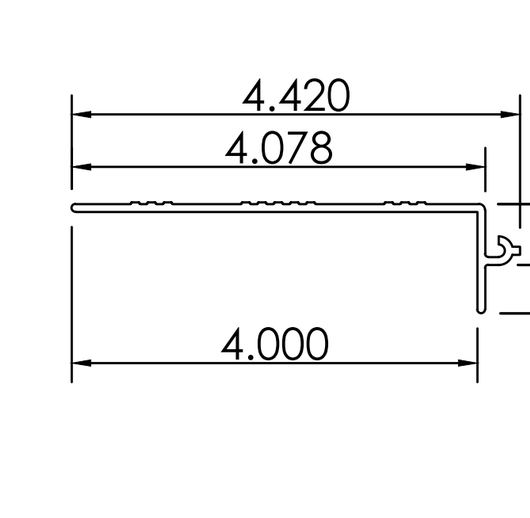

4" ALUMINUM STEP RISER PLANK
.078 WALL , 0.540#/FT.

31 / B38 — 4" ALUMINUM STEP RISER PLANK DETAIL
NOT TO SCALE

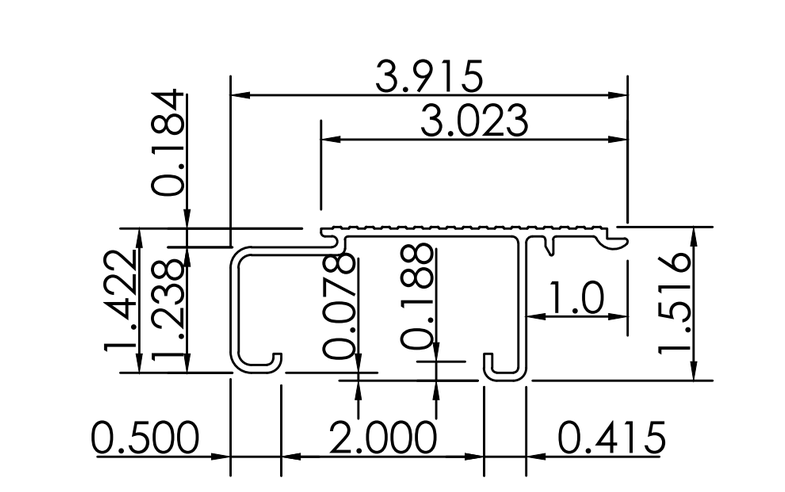

2X4 ALUMINUM INTERLOCKING NOSE W/RISER PLANK
.078 WALL , 0.781#/FT.
1. Ix = .164 IN. e-4
2. MATERIAL - 6063 T-6
3. MIN. MAT. PROP. - 25000 PSI
4. E = 10,000,000 PSI
5. C = 1.05 IN.

32 / B38 — 2 X 4 ALUMINUM (NOSE W/RISER) INTERLOCKING PLANK DETAIL
NOT TO SCALE

THIS DRAWING AND ALL INFORMATION THEREIN IS THE PROPERTY OF THE SOUTHERN BLEACHER COMPANY, TAYLOR & SYFAN AND IS CONFIDENTIAL AND MUST NOT BE MADE PUBLIC OR COPIED. THIS DRAWING IS LOANED SUBJECT TO RE-TURN UPON DEMAND AND, IS NOT TO BE USED DIRECTLY OR INDIRECTLY IN ANY WAY DETRIMENTAL TO OUR INTERESTS.

TAYLOR & SYFAN
STRUCTURAL ENGINEERS
CENTRAL COAST OFFICE — Ph: (626) 793-7438 Fax: (626) 793-7439 Toll: (800) 579-3881
553 S. Oak Knoll Ave. Pasadena, CA 91101
http://www.tsstructural.com/

Southern® BLEACHER COMPANY
GRANDSTANDS ▪BLEACHERS ▪STADIUMS
PO Box One, Graham, Texas 76450
801 Fifth Street.
Phone: 940/549-0733 Fax: 940/549-1365
Established 1946

REGISTERED PROFESSIONAL ENGINEER — BRIAN T. DEAN — S 6087 — STRUCTURAL — STATE OF CALIFORNIA
S&S 06/17/26
PRINCIPAL

TYPE: PLANK DETAILS
TITLE: PARLIER UNIFIED SCHOOL DISTRICT / PARLIER HIGH SCHOOL / PARLIER, CALIFORNIA

REV	BY	DATE	DESCRIPTION

DATE: 02/09/26 | DRAWN: JOA | CHECKED: DMC
JOB NUMBER: #26011R2
SHEET: B38 OF B43

22" X 34" (11x17 = 1/2 indicated scale)

26011R2

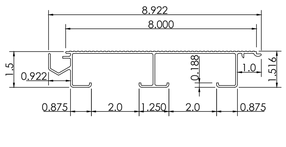

2X8 ALUMINUM INTERLOCKING DECK PLANK
.078 WALL , 1.746#/FT.
1. Ix = .479 IN. e-4
2. MATERIAL - 6063 T-6
3. MIN. MAT. PROP. - 25000 PSI
4. E = 10,000,000 PSI
5. C = .981 IN.

1 B39 **2 X 8 ALUMINUM (DECK) INTERLOCKING PLANK DETAIL**
NOT TO SCALE

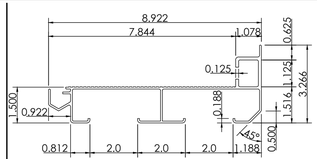

2X8 ALUMINUM INTERLOCKING (2000 HEEL) PLANK
.078 WALL , 2.296#/FT.
1. Ix = 1.21 IN. e-4
2. MATERIAL - 6063 T-6
3. MIN. MAT. PROP. - 25000 PSI
4. E = 10,000,000 PSI
5. C = 1.26 IN.

2 B39 **2 X 8 ALUMINUM (2000 HEEL) INTERLOCKING PLANK DETAIL**
NOT TO SCALE

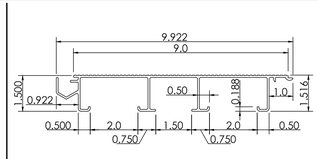

2X9 ALUMINUM INTERLOCKING DECK PLANK
.078 WALL , 1.931#/FT.
1. Ix = .465 IN. e-4
2. MATERIAL - 6063 T-6
3. MIN. MAT. PROP. - 25000 PSI
4. E = 10,000,000 PSI
5. C = 1.03 IN.

3 B39 **2 X 9 ALUMINUM (DECK) INTERLOCKING PLANK DETAIL**
NOT TO SCALE

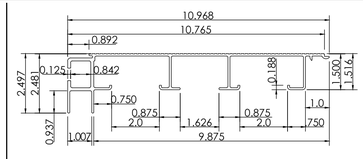

2X10 ALUMINUM INTERLOCKING (2000 NOSE) PLANK
.078 WALL , 2.716#/FT.
1. Ix = 1.06 IN. e-4
2. MATERIAL - 6063 T-6
3. MIN. MAT. PROP. - 25000 PSI
4. E = 10,000,000 PSI
5. C = .850 IN.

4 B39 **2 X 10 ALUMINUM (2000 NOSE) INTERLOCKING PLANK DETAIL**
NOT TO SCALE

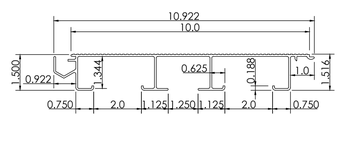

2X10 ALUMINUM INTERLOCKING DECK PLANK
.078 WALL , 2.656#/FT.
1. Ix = .575 IN. e-4
2. MATERIAL - 6063 T-6
3. MIN. MAT. PROP. - 25000 PSI
4. E = 10,000,000 PSI
5. C = 1.00 IN.

5 B39 **2 X 10 ALUMINUM (DECK) INTERLOCKING PLANK DETAIL**
NOT TO SCALE

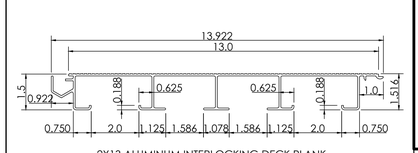

2X13 ALUMINUM INTERLOCKING DECK PLANK
.085 WALL , 2.888#/FT.
1. Ix = .731 IN. e-4
2. MATERIAL - 6063 T-6
3. MIN. MAT. PROP. - 25000 PSI
4. E = 10,000,000 PSI
5. C = 1.01 IN.

6 B39 **2 X 13 ALUMINUM (DECK) INTERLOCKING PLANK DETAIL**
NOT TO SCALE

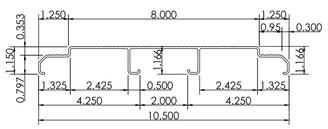

1X10 1/2 ALUMINUM FLAT RISER PLANK
.075 WALL , 1.481#/FT.
1. Ix = .165 IN. e-4
2. MATERIAL - 6063 T-6
3. MIN. MAT. PROP. - 25000 PSI
4. E = 10,000,000 PSI
5. C = .842 IN.

7 B39 **1 X 10 1/2 ALUMINUM FLAT RISER PLANK DETAIL**
NOT TO SCALE

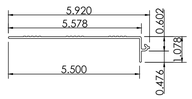

5 1/2" ALUMINUM STEP RISER PLANK
.078 WALL , 0.686#/FT.

8 B39 **5 1/2" ALUMINUM STEP RISER PLANK DETAIL**
NOT TO SCALE

THIS DRAWING AND ALL INFORMATION THEREIN IS THE PROPERTY OF THE SOUTHERN BLEACHER COMPANY, MOBILEPAN AND IS CONFIDENTIAL AND MUST NOT BE MADE PUBLIC OR COPIED. THIS DRAWING IS LOANED SUBJECT TO RE-TURN UPON DEMAND AND, IS NOT TO BE USED DIRECTLY OR INDIRECTLY IN ANY WAY DETRIMENTAL TO OUR INTERESTS.

STRUCTURAL ENGINEERS
CENTRAL OFFICE
553 S. Oak Knoll Ave. Pasadena, CA 91101
Ph: (626) 793-7438
Fax: (626) 793-7439
(800) 379-3881
http://www.tsmanuals.com/
TAYLOR&SYFAN
Southern®
BLEACHER COMPANY
GRANDSTANDS ●BLEACHERS ●STADIUMS
PO Box One, Graham, Texas 76450
801 Fifth Street Phone: 940-549-0733 Fax: 940-549-1368
Established 1946

REGISTERED PROFESSIONAL ENGINEER
BRIAN T. DEAKEN
S 6087
STRUCTURAL
STATE OF CALIFORNIA
S&S
06/17/26
PRINCIPAL

TYPE: PLANK DETAILS
TITLE: PARLIER UNIFIED SCHOOL DISTRICT
PARLIER HIGH SCHOOL
PARLIER, CALIFORNIA

REV	BY	DATE	DESCRIPTION

DATE 02/09/26 | DRAWN JOA | CHECKED DMC

JOB NUMBER #26011R2

SHEET B39 | OF B43

22" X 34" (1:1x17 = 1/2 indicated scale)

26011R2

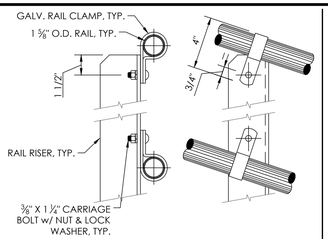

1 B40 RAIL RISER ATTACHMENT DETAIL
NOT TO SCALE

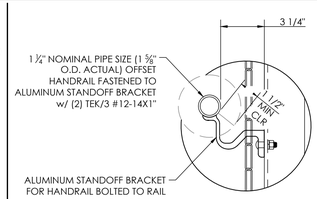

2 B40 HANDRAIL DETAIL
NOT TO SCALE

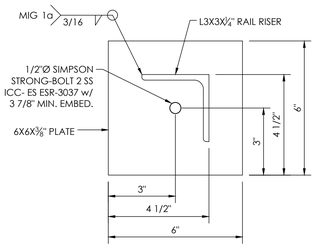

3 B40 BASE PLATE ATTACHMENT DETAIL
NOT TO SCALE

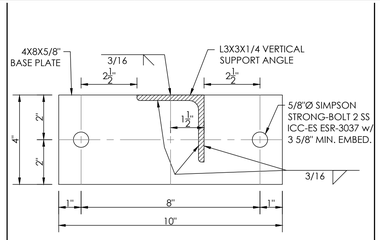

4 B40 BASE PLATE ATTACHMENT DETAIL
NOT TO SCALE

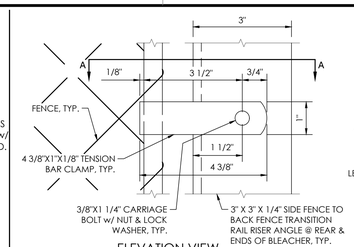

ELEVATION VIEW

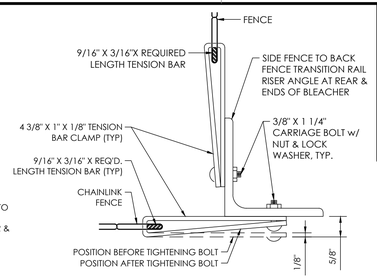

VIEW A - A

5 B40 TENSION BAR CLAMP DETAIL
NOT TO SCALE

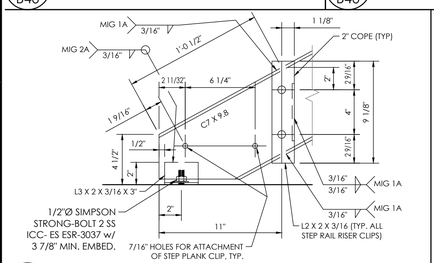

6 B40 LOWER PART/STEP FRAME DETAIL
NOT TO SCALE
(6" RISE X 11" TREAD SHOWN, OTHER RISES SIMILAR)

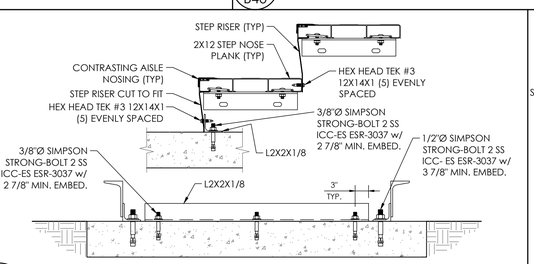

7 B40 STEP RISERS @ BOTTOM OF EXIT STEPS
NOT TO SCALE

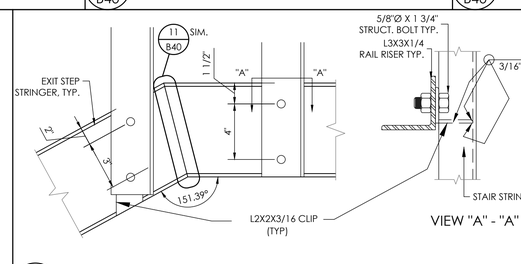

VIEW "A" - "A"

8 B40 UPPER PART / STEP FRAME CONNECTION DETAIL
NOT TO SCALE

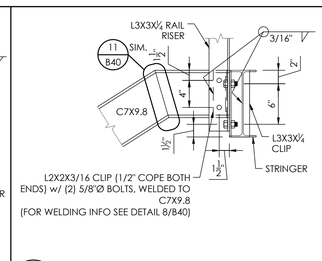

9 B40 STAIR CONNECTION DETAIL
NOT TO SCALE

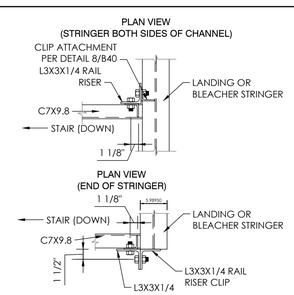

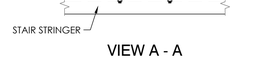

VIEW A - A

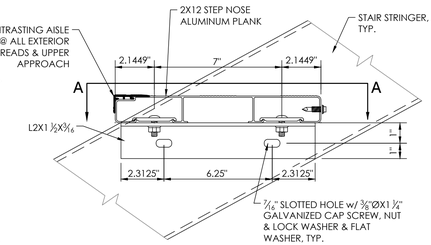

10 B40 STEP CONNECTION DETAIL
NOT TO SCALE

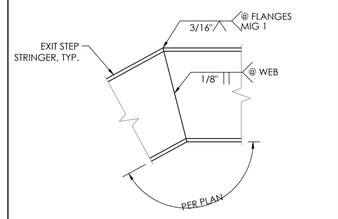

11 B40 STEP STRINGER WELD DETAIL
NOT TO SCALE

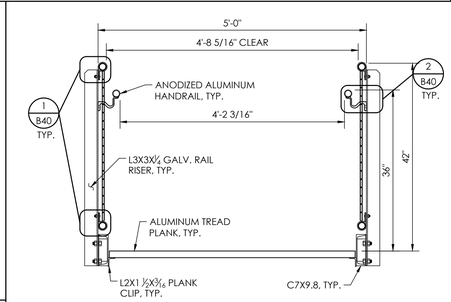

12 B40 EXIT STEP SECTION
NOT TO SCALE

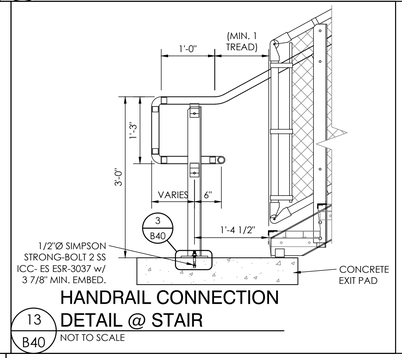

13 B40 HANDRAIL CONNECTION DETAIL @ STAIR
NOT TO SCALE

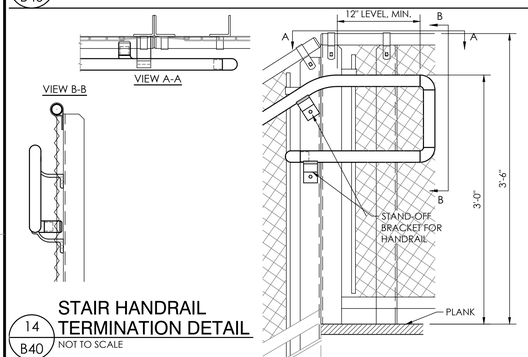

14 B40 STAIR HANDRAIL TERMINATION DETAIL
NOT TO SCALE

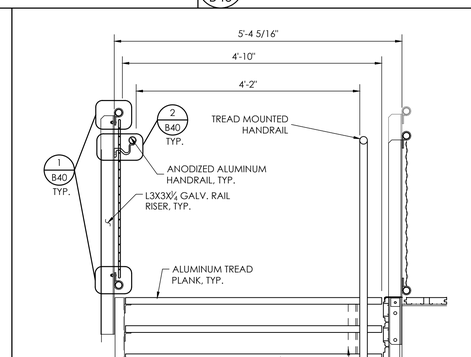

15 B40 EXIT STEP SECTION
NOT TO SCALE

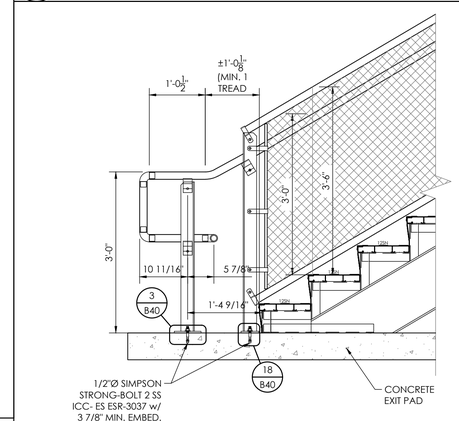

16 B40 HANDRAIL CONNECTION DETAIL @ STAIR
NOT TO SCALE

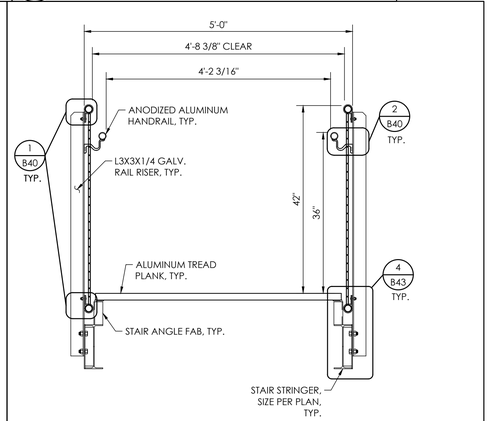

17 B40 EXIT STEP SECTION
NOT TO SCALE

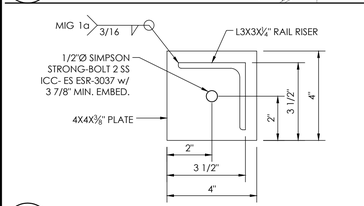

18 B40 BASE PLATE ATTACHMENT DETAIL
NOT TO SCALE

NOTE: ALL BOLTS ARE A307 U.N.O.

TAYLOR & YEAN
STRUCTURAL ENGINEERS
CORPORATE OFFICE: 553 S. Oak Knoll Ave. Pasadena, CA 91101
Ph: (626) 792-7438
Fax: (626) 792-7439
Ph: (800) 379-3881
Fax: (800) 379-3882
http://www.taylorandyean.com/

THIS DRAWING AND ALL INFORMATION THEREIN IS THE PROPERTY OF THE SOUTHERN BLEACHER COMPANY. IMOR A SYMILAR NATURE CONFIDENTIAL AND MUST NOT BE MODIFIED OR COPIED. THIS DRAWING IS LOANED SUBJECT TO RE-TURN UPON DEMAND AND, IS NOT TO BE USED DIRECTLY OR INDIRECTLY IN ANY WAY DETRIMENTAL TO OUR INTERESTS.

Southern® BLEACHER COMPANY
GRANDSTANDS •BLEACHERS •STADIUMS
Established 1946
PO Box One, Graham, Texas 76450
801 Fifth Street Phone: 940-549-0733 Fax: 940-549-1365

REGISTERED PROFESSIONAL ENGINEER
BRIAN T. DEAN
S 6087
STRUCTURAL
STATE OF CALIFORNIA
S&S
06/17/26
PRINCIPAL

REV	BY	DATE	DESCRIPTION

DATE	DRAWN	CHECKED
02/09/26	JOA	DMC

JOB NUMBER #26011R2

SHEET B40 OF B43

TYPE: EXIT DETAILS

TITLE: PARLIER UNIFIED SCHOOL DISTRICT
PARLIER HIGH SCHOOL
PARLIER, CALIFORNIA

22" X 34" (11x17 = 1/2 indicated scale)

26011R2

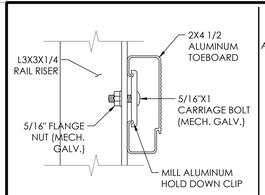

1 B41 **TOEBOARD ATTACHMENT DETAIL**
NOT TO SCALE

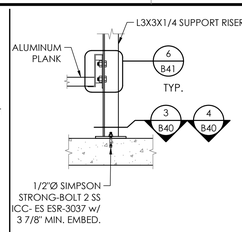

2 B41 **RAIL RISER CONNECTION DETAIL**
NOT TO SCALE

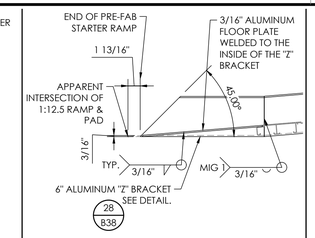

3 B41 **STARTER RAMP WELD DETAIL**
NOT TO SCALE

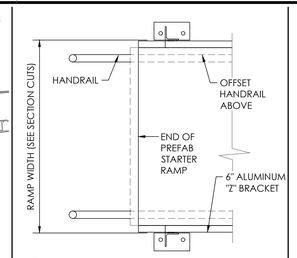

4 B41 **END OF RAMP DETAIL**
NOT TO SCALE

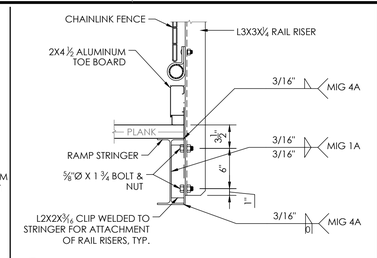

5 B41 **RAIL RISER ATTACHMENT DETAIL**
NOT TO SCALE

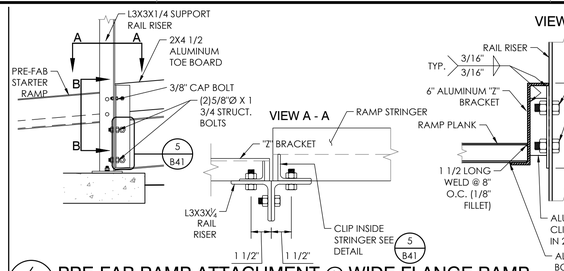

6 B41 **PRE-FAB RAMP ATTACHMENT @ WIDE FLANGE RAMP**
NOT TO SCALE

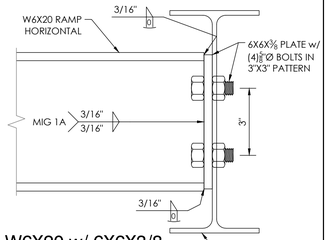

7 B41 **W6X20 w/ 6X6X3/8 PLATE WELD DETAIL**
NOT TO SCALE

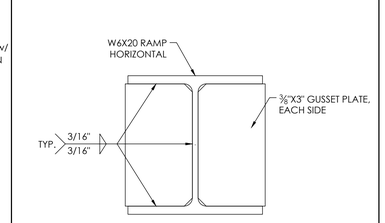

8 B41 **GUSSET PLATE DETAIL**
NOT TO SCALE

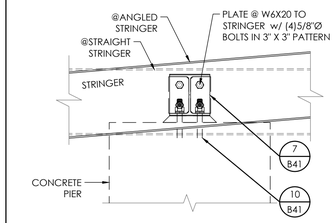

9 B41 **RAMP BEAM DETAIL @ STRINGER**
NOT TO SCALE

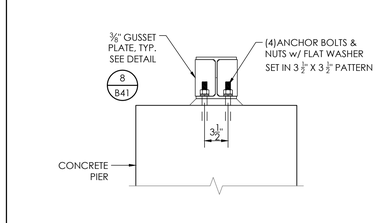

10 B41 **RAMP BEAM DETAIL @ PIER**
NOT TO SCALE

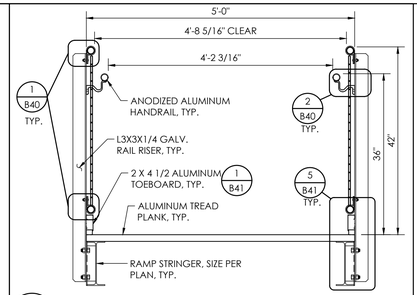

11 B41 **RAMP SECTION DETAIL**
NOT TO SCALE

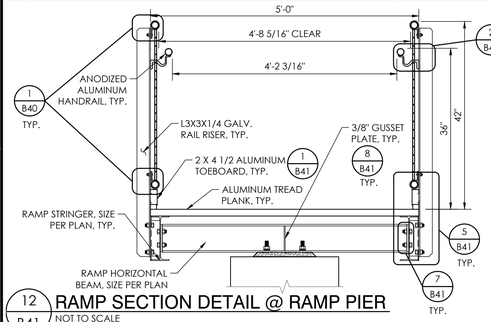

12 B41 **RAMP SECTION DETAIL @ RAMP PIER**
NOT TO SCALE

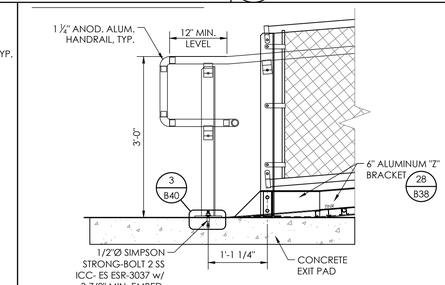

13 B41 **HANDRAIL CONNECTION DETAIL @ RAMP**
NOT TO SCALE

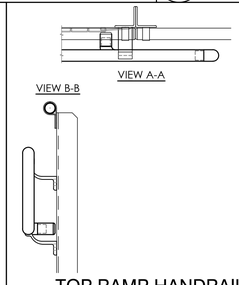

14 B41 **TOP RAMP HANDRAIL TERMINATION DETAIL**
NOT TO SCALE

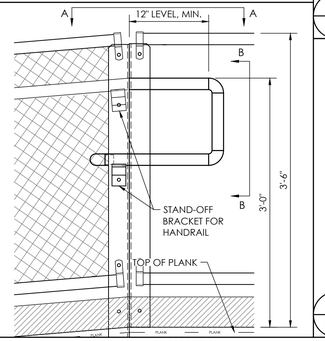

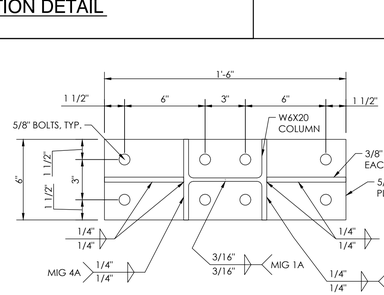

15 B41 **RAMP COLUMN CONNECTION DETAIL**
NOT TO SCALE

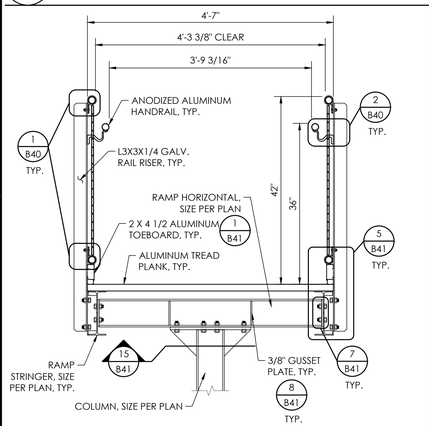

16 B41 **RAMP SECTION DETAIL @ RAMP COLUMN**
NOT TO SCALE

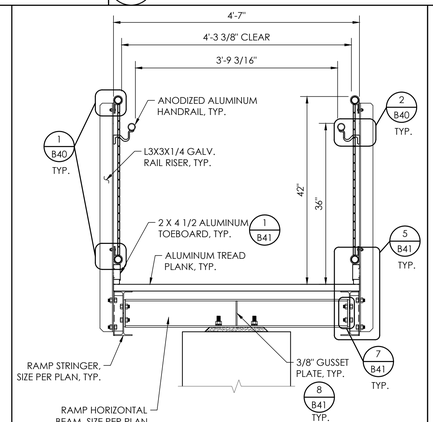

17 B41 **RAMP SECTION DETAIL @ RAMP PIER**
NOT TO SCALE

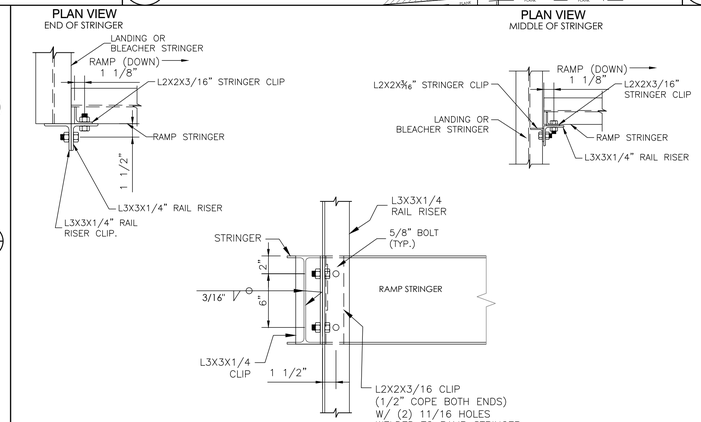

18 B41 **CONNECTION DETAIL**
NOT TO SCALE

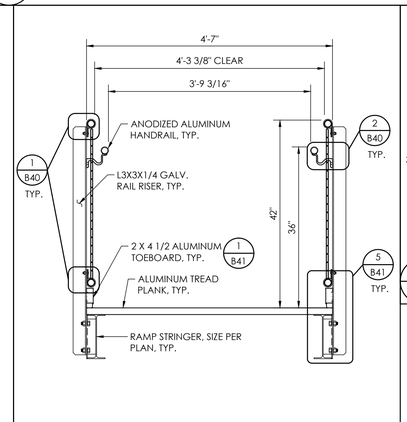

19 B41 **RAMP SECTION DETAIL**
NOT TO SCALE

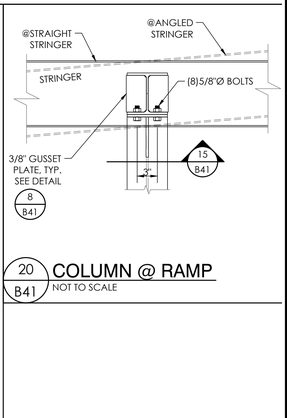

20 B41 **COLUMN @ RAMP**
NOT TO SCALE

NOTE: ALL BOLTS ARE A307 U.N.O.

THIS DRAWING AND ALL INFORMATION THEREIN IS THE PROPERTY OF THE SOUTHERN BLEACHER COMPANY, INC(S.B.C.)AND IS CONFIDENTIAL AND MUST NOT BE MADE PUBLIC OR COPIED. THIS DRAWING IS LOANED SUBJECT TO RE-TURN UPON DEMAND AND, IS NOT TO BE USED DIRECTLY OR INDIRECTLY IN ANY WAY DETRIMENTAL TO OUR INTERESTS.

STRUCTURAL ENGINEERS
TAYLOR & YEAH
CONTRACT
CONSULTANTS
553 S. Oak Knoll Ave. Pasadena, CA 91101
Ph: (626) 792-7438
Fax: (626) 792-7439
http://www.tayloryeah.com/

Southern®
BLEACHER COMPANY
GRANDSTANDS •BLEACHERS •STADIUMS
PO Box One, Graham, Texas 76450
801 Fifth Street Phone: 940/549-0733 Fax: 940/549-1365
Established 1946

REGISTERED PROFESSIONAL ENGINEER BRIAN T. DEAN S 6087 STRUCTURAL STATE OF CALIFORNIA
S&S 06/17/26
PRINCIPAL

TYPE	DESCRIPTION	DATE	REV	BY
EXIT DETAILS				

PARLIER UNIFIED SCHOOL DISTRICT
PARLIER HIGH SCHOOL
PARLIER, CALIFORNIA

DATE 02/09/26 | DRAWN JOA | CHECKED DMC

JOB NUMBER #26011R2

SHEET B41 | OF B43

22" X 34" (1:1x17 = 1/2 indicated scale)

26011R2

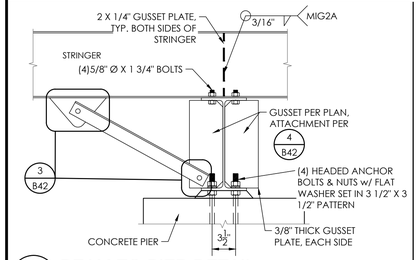

1 B42 **BEAM TO PIER DETAIL**
NOT TO SCALE

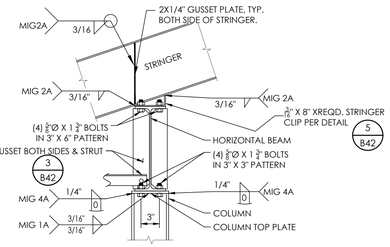

2 B42 **BEAM TO COLUMN DETAIL**
NOT TO SCALE

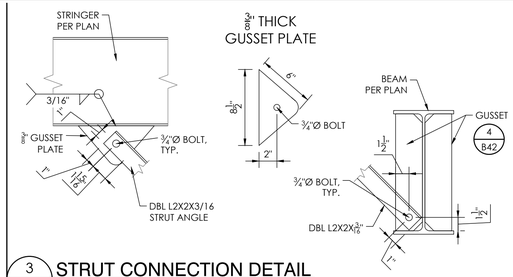

3 B42 **STRUT CONNECTION DETAIL**
NOT TO SCALE

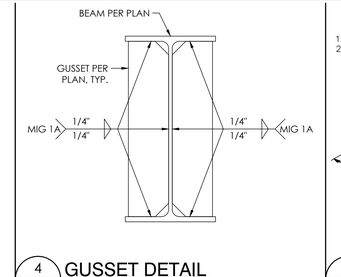

4 B42 **GUSSET DETAIL**
NOT TO SCALE

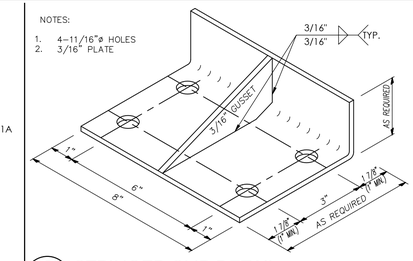

5 B42 **STRINGER CLIP DETAIL**
NOT TO SCALE

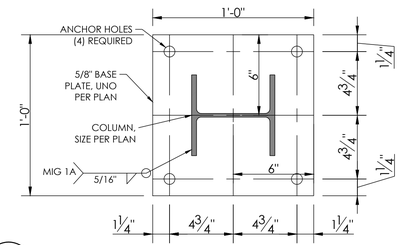

6 B42 **BASE PLATE ATTACHMENT DETAIL**
NOT TO SCALE

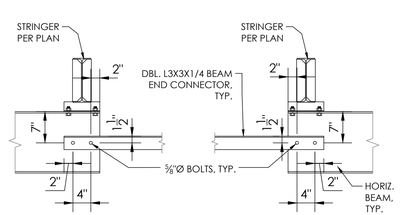

7 B42 **BEAM END CONNECTION DETAIL**
NOT TO SCALE

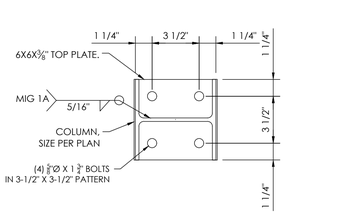

8 B42 **TOP PLATE ATTACHMENT DETAIL**
NOT TO SCALE

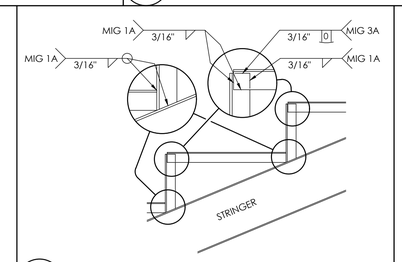

9 B42 **ANGLE FABRICATION DETAIL**
NOT TO SCALE

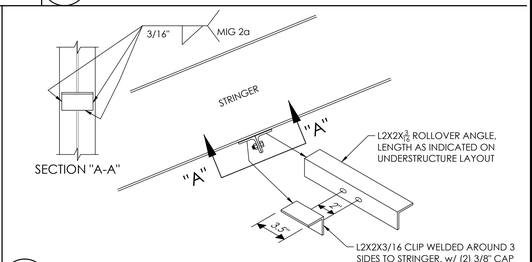

10 B42 **ROLLOVER ANGLE DETAIL**
NOT TO SCALE

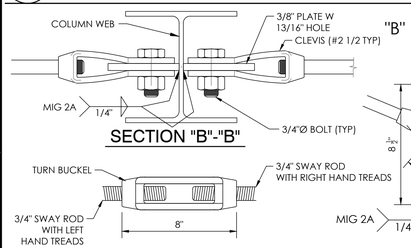

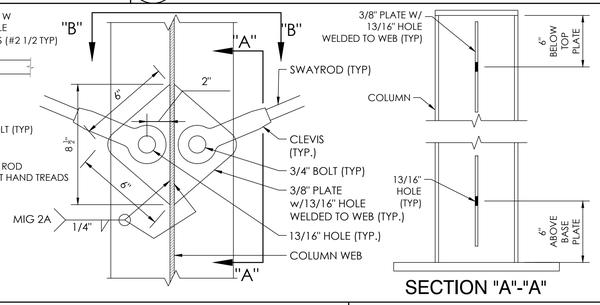

11 B42 **CLEVIS INST. DETAIL**
NOT TO SCALE

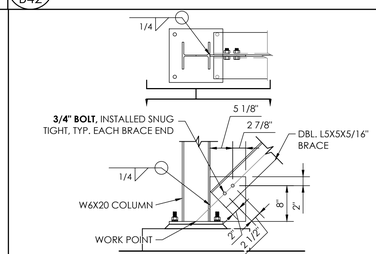

12 B42 **BEAM TO COLUMN DETAIL**
NOT TO SCALE

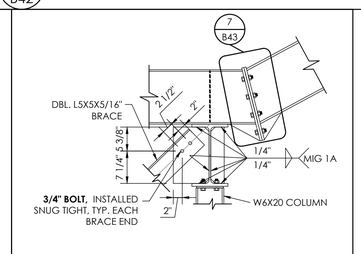

13 B42 **BEAM TO COLUMN DETAIL**
NOT TO SCALE

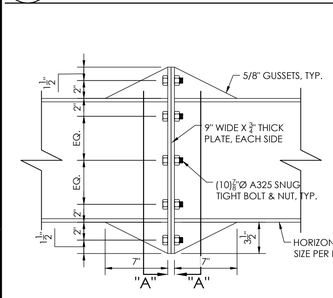

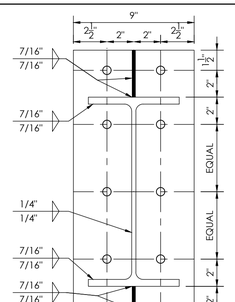

14 B42 **HORIZONTAL BEAM SPLICE DETAIL**
NOT TO SCALE

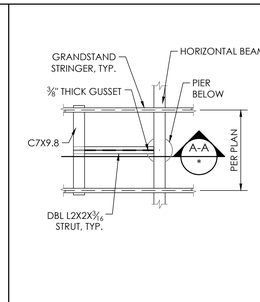

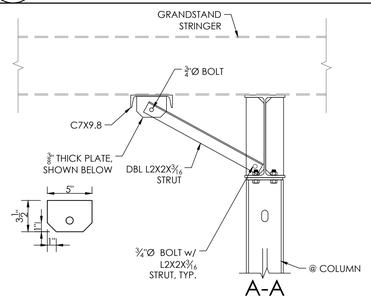

15 B42 **STRUT CONNECTION DETAIL**
NOT TO SCALE

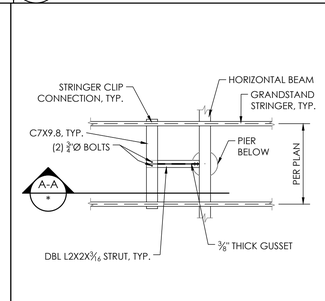

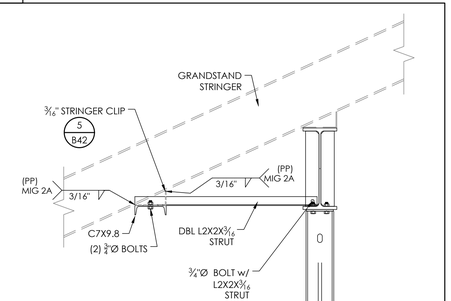

16 B42 **STRUT CONNECTION DETAIL**
NOT TO SCALE

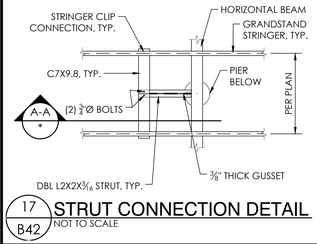

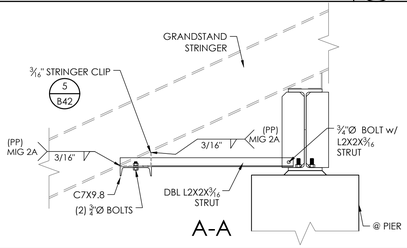

17 B42 **STRUT CONNECTION DETAIL**
NOT TO SCALE

NOTE: ALL BOLTS ARE A307 U.N.O.

THIS DRAWING AND ALL INFORMATION THEREIN IS THE PROPERTY OF THE SOUTHERN BLEACHER COMPANY, MOBILE, AL AND IS CONFIDENTIAL AND MUST NOT BE MADE PUBLIC OR COPIED. THIS DRAWING IS LOANED SUBJECT TO RE-TURN UPON DEMAND AND, IS NOT TO BE USED DIRECTLY OR INDIRECTLY IN ANY WAY DETRIMENTAL TO OUR INTERESTS.

STRUCTURAL ENGINEERS
TAYLOR & SYFAN
CONSULTING
CONTRACT
FAX
553 S. Oak Knoll Ave., Pasadena, CA 91101
http://www.tsmanet.com/
Southern
BLEACHER COMPANY
GRANDSTANDS • BLEACHERS • STADIUMS
Established 1946
PO Box One, Graham, Texas 76450
801 Fifth Street
Phone: 940-549-0733 Fax: 940-549-1365

REGISTERED PROFESSIONAL ENGINEER
BRIAN T. DEAN
S 6087
STRUCTURAL
STATE OF CALIFORNIA
S&S
06/17/26
PRINCIPAL

TYPE: GRANDSTAND DETAILS
TITLE: PARLIER UNIFIED SCHOOL DISTRICT
PARLIER HIGH SCHOOL
PARLIER, CALIFORNIA

REV	BY	DATE	DESCRIPTION

DATE: 02/09/26 | DRAWN: JOA | CHECKED: DMC
JOB NUMBER: #26011R2
SHEET: B42 | OF: B43

22" X 34" (11x17 = 1/2 indicated scale)

26011R2

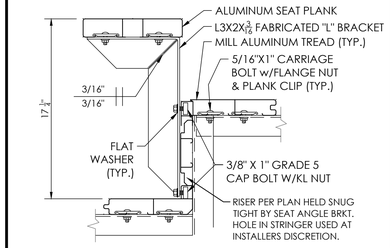

1 B43 "L" BRACKET DETAIL
NOT TO SCALE

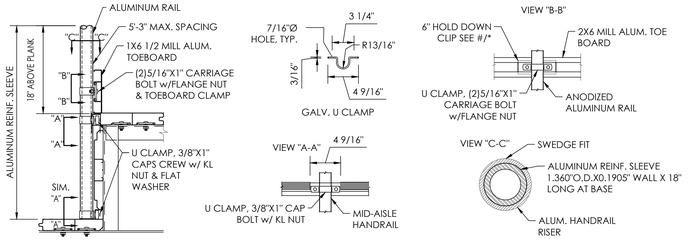

2 B43 RAIL ATTACHMENT DETAIL
NOT TO SCALE

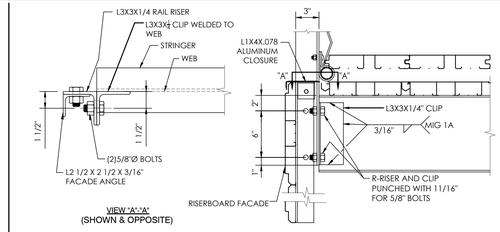

3 B43 FRONT RAIL RISER ATTACHMENT DETAIL
NOT TO SCALE

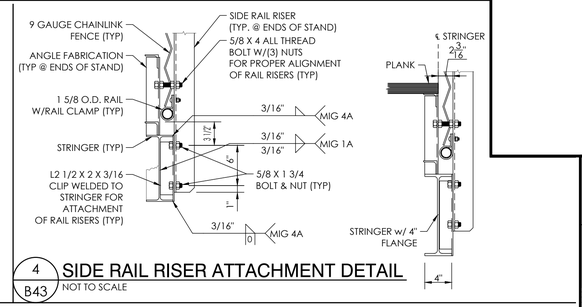

4 B43 SIDE RAIL RISER ATTACHMENT DETAIL
NOT TO SCALE

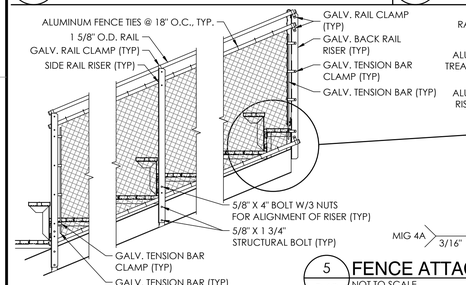

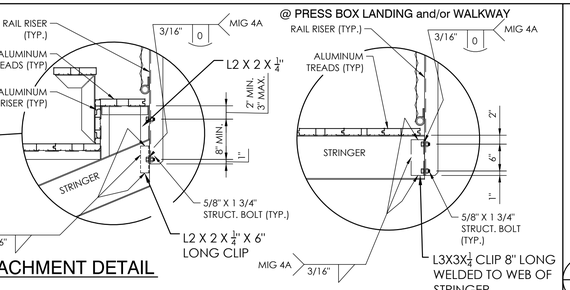

5 B43 FENCE ATTACHMENT DETAIL
NOT TO SCALE

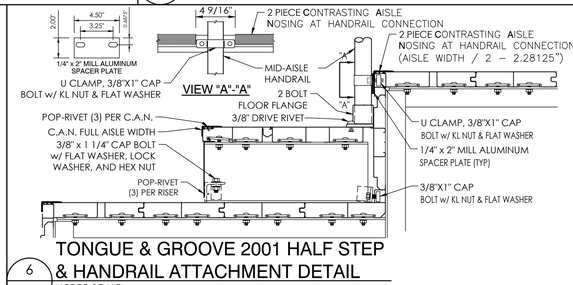

6 B43 TONGUE & GROOVE 2001 HALF STEP & HANDRAIL ATTACHMENT DETAIL
NOT TO SCALE

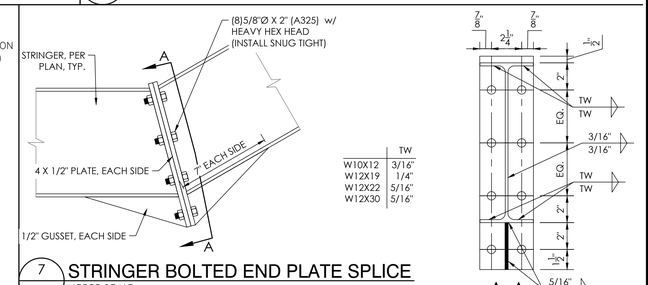

7 B43 STRINGER BOLTED END PLATE SPLICE
NOT TO SCALE

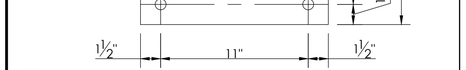

8 B43 BASE PLATE ATTACHMENT DETAIL
NOT TO SCALE

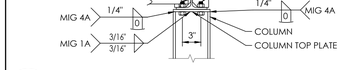

9 B43 BEAM TO COLUMN DETAIL
NOT TO SCALE

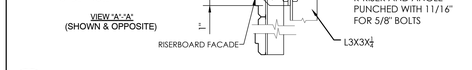

10 B43 FRONT RAIL RISER ATTACHMENT DETAIL
NOT TO SCALE



11 B43 STRINGER SNOOTER JOINT CONNECTION
NOT TO SCALE

FLANGE PP WELD CONFIGURATION

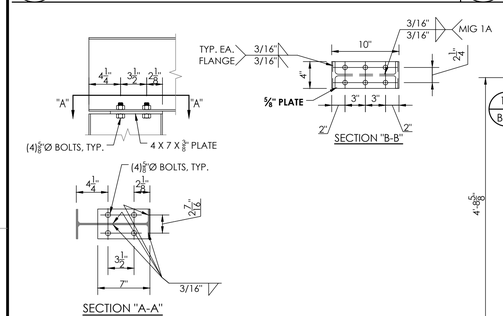

12 B43 PRESS BOX DETAIL
NOT TO SCALE

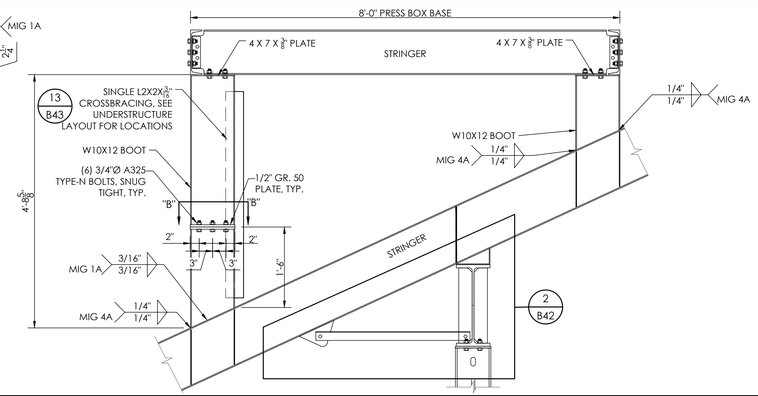

13 B43 CROSSBRACING @ BOOT
NOT TO SCALE

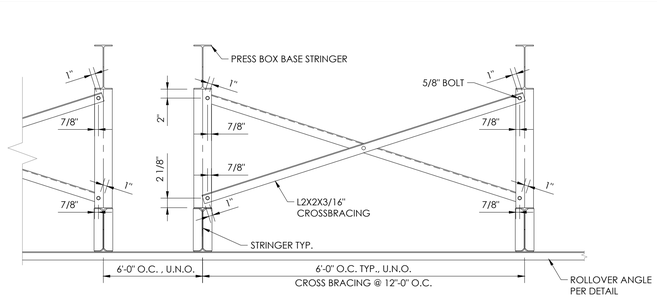

NOTE: ALL BOLTS ARE A307 U.N.O.

THIS DRAWING AND ALL INFORMATION THEREIN IS THE PROPERTY OF THE SOUTHERN BLEACHER COMPANY, MOBILE, AND IS CONFIDENTIAL AND MUST NOT BE MADE PUBLIC OR COPIED. THIS DRAWING IS LOANED SUBJECT TO RE-TURN UPON DEMAND AND, IS NOT TO BE USED DIRECTLY OR INDIRECTLY IN ANY WAY DETRIMENTAL TO OUR INTERESTS.

STRUCTURAL ENGINEERS
CONTACT: BRIAN T. DEAN
PHONE: (626) 793-7438
FAX: (626) 793-3881
E-MAIL: bdean@taylor-syfan.com
http://www.taylor-syfan.com
553 S. Oak Knoll Ave. Pasadena, CA 91101
TAYLOR & SYFAN
Southern BLEACHER COMPANY
GRANDSTANDS • BLEACHERS • STADIUMS
PO Box One, Graham, Texas 76450
801 Fifth Street Phone: 940-549-0733 Fax: 940-549-1365
Established 1946

REGISTERED PROFESSIONAL ENGINEER
BRIAN T. DEAN
S 6087
STRUCTURAL
STATE OF CALIFORNIA
S&S
06/17/26
PRINCIPAL

REV	BY	DATE	DESCRIPTION

DATE	DRAWN	CHECKED
02/09/26	JOA	DMC

JOB NUMBER #26011R2

SHEET B43 OF B43

TYPE: GRANDSTAND DETAILS

TITLE: PARLIER UNIFIED SCHOOL DISTRICT
PARLIER HIGH SCHOOL
PARLIER, CALIFORNIA

22" X 34" (11x17 = 1/2 indicated scale)

26011R2

DSA 103-22: LISTING OF STRUCTURAL TESTS & SPECIAL INSPECTIONS, 2022 CBC

Application Number:	School Name:	School District:
04-122194	Pre Check	Daktronics, Inc.
DSA File Number:	Increment Number:	Date Created: 2023-04-20 22:42:50

2022 CBC

IMPORTANT: This form is only a summary list of structural tests and some of the special inspections required for the project. Generally, the structural tests and special inspections noted on this form are those that will be performed by the Geotechnical Engineer of Record, Laboratory of Record, or Special Inspector. The actual complete test and inspection program must be performed as detailed on the DSA approved documents. The appendix at the bottom of this form identifies work NOT subject to DSA requirements for special inspection or structural testing. The project inspector is responsible for providing inspection of all facets of construction, including but not limited to, special inspections not listed on this form such as structural wood framing, high-load wood diaphragms, cold-formed steel framing, anchorage of non-structural components, etc., per Title 24, Part 2, Chapter 17A (2022 CBC).

**NOTE: Undefined section and table references found in this document are from the CBC, or California Building Code.

KEY TO COLUMNS

1. TYPE	2. PERFORMED BY
Continuous Indicates that a continuous special inspection is required	GE (Geotechnical Engineer) Indicates that the special inspection shall be performed by a registered geotechnical engineer or his or her authorized representative.
Periodic Indicates that a periodic special inspection is required	LOR (Laboratory of Record) Indicates that the test or special inspection shall be performed by a testing laboratory accepted in the DSA Laboratory Evaluation and Acceptance (LEA) Program. See CAC Section 4-335.
Test Indicates that a test is required	PI (Project Inspector) Indicates that the special inspection may be performed by a project inspector when specifically approved by DSA.
	SI (Special Inspection) Indicates that the special inspection shall be performed by an appropriately qualified/approved special inspector.

THE REST OF THE DSA 103 FORM CONTINUES ON SHEETS 2 & 3.

CHECKLIST OF DESIGN PARAMETERS:

- RISK CATEGORY: II
- WIND SPEED: 100 MPH OR 130 MPH, AS SELECTED FROM TABLES ON SHEETS 8 THRU 10
- ALL CONNECTIONS AND MOUNTING DETAILS DESIGNED FOR 130MPH.
- EXPOSURE: C
- Kzt = 1.0, Kd = 0.85, g = 0.85
- LATERAL FORCE-RESISTING SYSTEM: SIGNS & BILLBOARDS
- ANALYSIS PROCEDURE: EQUIVALENT LATERAL FORCE PROCEDURE
- SEISMIC DESIGN CATEGORY: E
- SEISMIC IMPORTANCE FACTOR: Ie = 1.0
- SITE CLASS: D (E & F ARE NOT ALLOWED)
- Ss: 3.00
- S1: 1.50
- SDS: 2.00
- SD1: 1.70
- Fv = 1.7
- Fa = 1.0
- R = 3.0
- Cs: 0.67
- DESIGN BASE SHEAR: V = 0.67*W
- IF PROJECT IS LOCATED IN A FLOOD ZONE OTHER THAN ZONE X, A LETTER STAMPED AND SIGNED FROM A SOILS ENGINEER IS NEEDED TO VALIDATE THE ALLOWABLE SOIL VALUES SPECIFIED IN THIS PC ARE STILL APPLICABLE.
- GEOHAZARD REPORTS ARE NOT REQUIRED FOR NON-BUILDING FREESTANDING SIGN AND SCOREBOARD STRUCTURES. REF. IR A-4
- CUT SHEETS FOR MANUFACTURED EQUIPMENT ARE REQUIRED.
- THERE ARE NO APPLICABLE FIRE, LIFE SAFETY, OR ENERGY/CLIMATE DESIGN PARAMETERS.

SHEET 1; SCOREBOARD PC COVER SHEET
SHEET 2; DSA 103 SPECIAL INSPECTION FORM
SHEET 3; DSA 103 SPECIAL INSPECTION FORM (CONT.)
~~SHEET 4; EQUIPMENT MOUNTING DETAILS (WITHOUT VIDEO DISPLAY)~~
SHEET 5; EQUIPMENT MOUNTING DETAILS (WITH VIDEO DISPLAY)
SHEET 6; DECORATIVE ACCENT TRUSS LAYOUT
~~SHEET 7; SPORTSOUND 500 ATTACHMENT DETAILS~~
~~SHEET 8; SPORTSOUND 1500HD MOUNTING DETAILS~~
SHEET 9; TWO-COLUMN STRUCTURE DETAILS WITH PIER FOUNDATIONS
~~SHEET 10; THREE-COLUMN STRUCTURE DETAILS WITH PIER FOUNDATIONS~~
~~SHEET 11; SPORTSOUND 1500HD SINGLE POLE MOUNTING~~

DRAWING INDEX

SCOPE: CONSTRUCTION OF 2- OR 3-COLUMN STRUCTURES FOR USE WITH DAKTRONICS SIGNS.

INSPECTOR OF RECORD, CLASS 2

PRECHECK DRAWING CHANGES:
CHANGES IN THE PLANS AND SPECIFICATION SHALL BE MADE BY REVISION DOCUMENTS APPROVED BY DSA. (2022 CALIFORNIA ADMINISTRATIVE CODE SECTION 4-338)

SITE SPECIFIC ARCHITECTURAL DRAWING CHANGES:
ALL WORK SHALL CONFORM TO TITLE 24, CALIFORNIA CODE OF REGULATIONS (CCR) CHANGES TO THE APPROVED DRAWING AND SPECIFICATION SHALL BE MADE BY AN ADDENDUM OR A CONSTRUCTION CHANGE DOCUMENT (CCD) APPROVED BY THE DIVISION OF STATE ARCHITECTS, AS REQUIRED BY SECTION 4-338 PART 1 TITLE 24 CCR.

A PROJECT INSPECTOR EMPLOYED BY THE DISTRICT, OWNER AND APPROVED BY THE DIVISION OF STATE ARCHITECTS SHALL PROVIDE SPECIAL INSPECTION OF THE WORK, THE DUTIES OF THE INSPECTION ARE DEFINED IN SECTION 4-342, PART 1, TITLE 24 CODE.

TITLE 24 CODES

2022 CALIFORNIA ADMINISTRATIVE CODE (CAC)...................................	(PART 1, TITLE 24 CCR)
2022 CALIFORNIA BUILDING CODE (CBC), VOLUMES 1 AND 2..............	(PART 2, TITLE 24 CCR
2022 CALIFORNIA ELECTRICAL CODE..	(PART 3, TITLE 24 CCR)
2022 CALIFORNIA MECHANICAL CODE (CMC)...	(PART 4, TITLE 24 CCR)
2022 CALIFORNIA PLUMBING CODE...	(PART 5, TITLE 24 CCR)
2022 CALIFORNIA ENERGY CODE..	(PART 6, TITLE 24 CCR)
2022 CALIFORNIA FIRE CODE (CFC)..	(PART 9, TITLE 24 CCR)
2022 CALIFORNIA GREEN BUILDING STANDARDS CODE.......................	(PART 11, TITLE 24 CCR)
2022 CALIFORNIA REFERENCED STANDARDS CODE............................	(PART 12, TITLE 24 CCR)

REFERENCE CODE SECTIONS FOR APPLICABLE STANDARDS
2022 CBC, CHAPTER 35
2022 CFC, CHAPTER 80

GENERAL REQUIREMENTS
THE ARCHITECT OR STRUCTURAL ENGINEER IN GENERAL RESPONSIBLE CHARGE SHALL SIGN AND SEAL ALL DRAWINGS AND SPECIFICATIONS.

GENERAL / CODE INFORMATION

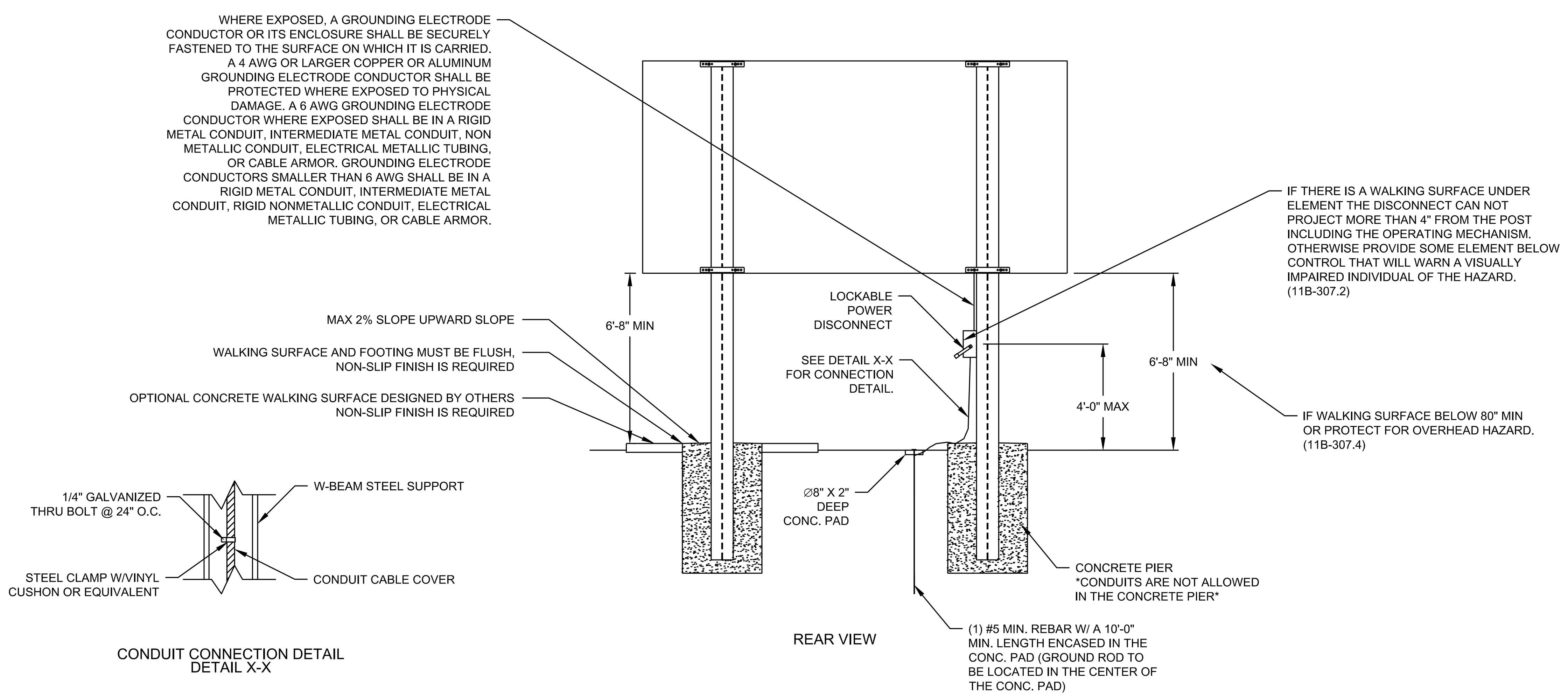

NOTE:

ALL DISPLAYS MUST BE GROUNDED PER ARTICLE 250 AND 600 OF THE CALIFORNIA ELECTRICAL CODE WITH NO MORE THAN 10 OHMS GROUND RESISTANCE.

GROUNDING DETAIL

ALUMINUM: ALL ALUMINUM MEMBER GRADE 6061-T6 (UNLESS NOTED OTHERWISE)
CORROSION RESISTANT MATERIAL SHALL BE PROVIDED BETWEEN FERROUS METAL (STEEL) AND NON-FERROUS METAL (ALUMINUM).

STEEL: DESIGN AND FABRICATION IN ACCORDANCE WITH AISC-ASD, 15th EDITION.
WIDE FLANGE SHAPES ASTM A992 (Fy = 50 ksi)
BOLTS SS304 F593C CW1. Fu=100 KSI OR A325 WITH CORROSION-PREVENTITIVE COATING THAT DEMONSTRATED NO MORE THAN 2% RED RUST IN MINIMUM 1,000 HOURS OF EXPOSURE IN SALT SPRAY TEST PER ASTM B117.
ZINC PLATED FASTENERS DO NOT COMPLY WITH THIS REQUIREMENT AND GALVANIZED HARDWARE IS NOT COMPATIBLE WITH ALL MANUFACTURED EQUIPMENT.
REINFORCING STEEL ASTM 615, GRADE 60 (Fy = 60 ksi)
HSS SHAPES ASTM A500 GR C (Fy = 50 ksi)
STRUCTURAL STEEL SHALL BE HOT-DIP GALVANIZED (MINIMUM ASTM A123 OR A153 CLASS D, AS APPLICABLE) OR PAINTED WITH ZINC-RICH PRIMER, UNDERCOAT, AND FINISH COAT; OR EQUIVALENT PAINT SYSTEM.

WELDING: DESIGN AND FABRICATION ACCORDING TO AWS D1.1, CURRENT EDITION, AWS CERTIFICATION REQUIRED OF ALL STRUCTURAL WELDERS.
E70XX ELECTRODES FOR SMAW PROCESSES
F7X-EXXX ELECTRODES FOR SAW PROCESSES
PROVIDE PERIODIC SPECIAL INSPECTION FOR FIELD WELDING PER 2022 CBC, TABLE 1705A.2.1

CONCRETE: DESIGN AND CONSTRUCTION ACCORDING TO ACI 318-19.
TYPE V CEMENT, MAXIMUM WATER-TO-CEMENT RATIO = 0.45
COMPRESSIVE STRENGTH AT 28 DAYS (f'c) = 4500 PSI, MIN.
CONTINUOUS BATCH PLANT INSPECTION NOT REQUIRED.
PROVIDE SLOPE AWAY FROM BASE OF SUPPORTS.
CONCRETE POURED INTO CONSTRAINED EARTH EXCAVATIONS MUST CURE UNDER PROPER CONDITIONS FOR 4 DAYS PRIOR TO SIGN CABINET INSTALLATION.
EXCEPTION: IF THE OVERALL HEIGHT OF THE SIGN IS LESS THAN 20 FEET ABOVE GRADE AND THE SIGN POLE IS ADEQUATELY BRACED AGAINST WIND LOADS FOR A MINIMUM OF 4 DAYS, THE SIGN CABINET MAY BE INSTALLED THE SAME DAY THE FOOTING IS POURED.

SOILS: SOIL PASSIVE PRESSURE BASED ON 2022 CBC, TABLE 1806A.2, CLASS 5.
LATERAL BEARING PRESSURE = 100 PSF/FT (THIS VALUE IS INCREASED IN THE CALCULATIONS PER CBC SECTION 1806A.3.4 FOR POLE FOOTING DESIGN)
INSPECTOR OF RECORD (IR) SHALL PROVIDE INSPECTION OF SOILS PER TEST AND INSPECTION FORM DSA-103. (IF SOFT OR SANDY SOIL, COLLAPSING OR UNSTABLE SOIL, CORROSIVE SOIL, ORGANIC MATERIALS OR GROUNDWATER ARE ENCOUNTERED, IMMEDIATELY CONTACT THE ARCHITECT OR ENGINEER OF RECORD FOR ADDITIONAL FOUNDATION REQUIREMENTS.)

TESTING & QUALITY CONTROL:

UNLESS NOTED OTHERWISE, CONCRETE MATERIALS SHALL CONFORM TO CHAPTER 19A. SPECIAL INSPECTIONS AND TESTS SHALL BE REQUIRED PER TABLE 1705A.3. FOUNDATION INSPECTION SHALL BE REQUIRED PER 1705A.6. STEEL SPECIAL INSPECTION AND TESTS SHALL BE REQUIRED PER TABLE 1705A.2.1.

NOTES: SIGN CABINETRY SHALL BE FABRICATED TO PROVIDE ISOLATION OF DISSIMILAR MATERIALS.

DAKTRONICS HAS DESIGNED THE DISPLAY COMPONENTS AND THEIR MOUNTING PER CBC 2022 AND THEY ARE IN COMPLIANCE WITH THE CURRENT CODES.

CONSTRUCTION SPECIFICATIONS

PRE-CHECK (PC) DOCUMENT

CODE: 2022 CBC

A SEPARATE PROJECT APPLICATION FOR CONSTRUCTION IS REQUIRED.

VECTOR ENGINEERS
WELLS L. HOLMES, S.E.
651 W. GALENA PARK BLVD. STE. 101
DRAPER, UTAH 84020
(801) 990-1775
(801) 990-1776 FAX

REGISTERED PROFESSIONAL ENGINEER WELLS HOLMES S 6203 STRUCTURAL STATE OF CALIFORNIA
08/07/2023

STRUCTURAL ENGINEER OF RECORD

APPROVED
DIV. OF THE STATE ARCHITECT
APP: 04-122194 PC
REVIEWED FOR
SS ☑ FLS ☑ ACS ☑ CG ☐
DATE: 09/18/2023

PROJECT-SPECIFIC APPROVALS

Quote: 893679-1-0

PRE-CHECK (PC) DOCUMENT
Code: 2022 CBC
A separate project application for construction is required.

THE CONCEPTS EXPRESSED AND DETAILS SHOWN ON THIS DRAWING ARE CONFIDENTIAL AND PROPRIETARY. DO NOT REPRODUCE BY ANY MEANS WITHOUT THE EXPRESS WRITTEN CONSENT OF DAKTRONICS, INC. OR ITS WHOLLY OWNED SUBSIDIARIES.
COPYRIGHT 2020 DAKTRONICS, INC. (USA)

THIRD ANGLE PROJECTION

PROJECT:	2022 CBC DSA PRE-CHECK DRAWINGS				
TITLE:	SHEET 1; SCOREBOARD PC COVER SHEET				
DATE:	8 MAR 23	DIM UNITS: INCHES [MILLIMETERS]		SHEET	REV
SCALE:	1/4" = 1'-0"	DO NOT SCALE DRAWING		1	A
DESIGN:	KKURTEN	JOB NO.	FUNC - TYPE - SIZE	5224617	
DRAWN:	SEASTMA	P2236	F - 10 - D		

DSA 103-22: LISTING OF STRUCTURAL TESTS & SPECIAL INSPECTIONS, 2022 CBC

Application Number: 04-122194 | School Name: Pre Check | School District: Daktronics, Inc.
DSA File Number: | Increment Number: | Date Created: 2023-04-20 22:42:50

2022 CBC

IMPORTANT: This form is only a summary list of structural tests and some of the special inspections required for the project. Generally, the structural tests and special inspections noted on this form are those that will be performed by the Geotechnical Engineer of Record, Laboratory of Record, or Special Inspector. The actual complete test and inspection program must be performed as detailed on the DSA approved documents. The appendix at the bottom of this form identifies work NOT subject to DSA requirements for special inspection or structural testing. The project inspector is responsible for providing inspection of all facets of construction, including but not limited to, special inspections not listed on this form such as structural wood framing, high-load wood diaphragms, cold-formed steel framing, anchorage of non-structural components, etc., per Title 24, Part 2, Chapter 17A (2022 CBC).

**NOTE: Undefined section and table references found in this document are from the CBC, or California Building Code.

KEY TO COLUMNS

1. TYPE	2. PERFORMED BY
Continuous Indicates that a continuous special inspection is required	GE (Geotechnical Engineer) Indicates that the special inspection shall be performed by a registered geotechnical engineer or his or her authorized representative.
Periodic Indicates that a periodic special inspection is required	LOR (Laboratory of Record) Indicates that the test or special inspection shall be performed by a testing laboratory accepted in the DSA Laboratory Evaluation and Acceptance (LEA) Program. See CAC Section 4-335.
Test Indicates that a test is required	PI (Project Inspector) Indicates that the special inspection may be performed by a project inspector when specifically approved by DSA.
	SI (Special Inspection) Indicates that the special inspection shall be performed by an appropriately qualified/approved special inspector.

DSA 103-22: LISTING OF STRUCTURAL TESTS & SPECIAL INSPECTIONS (SOILS), 2022 CBC

Table 1705A,6, Table 1705A,7, Table 1705A,8

Application Number: 04-122194 | School Name: Pre Check | School District: Daktronics, Inc.
DSA File Number: | Increment Number: | Date Created: 2023-04-20 22:42:50

Geotechnical Reports:Project does NOT have and does NOT require a geotechnical report

	S1. GENERAL:			
	Test or Special Inspection	Type	Performed By	Code References and Notes
☐	a. Verify that: * Site has been prepared properly prior to placement of controlled fill and/or excavations for foundations. * Foundation excavations are extended to proper depth and have reached proper material. * Materials below footings are adequate to achieve the design bearing capacity.	See Notes	PI	Refer to specific items identified in the Appendix listing exemptions for limitations. Placement of controlled fill exceeding 12" depth under foundations is not permitted without a geotechnical report.

	S2. SOIL COMPACTION AND FILL:			
	Test or Special Inspection	Type	Performed By	Code References and Notes
☐	a. Verify use of proper materials, densities and inspect lift thicknesses, placement and compaction during placement of fill.	Continuous	LOR*	* Under the supervision of a geotechnical engineer or LOR's engineering manager. Refer to specific items identified in the Appendix listing exemptions for limitations.
☐	b. Compaction testing.	Test	LOR*	* Under the supervision of a geotechnical engineer or LOR's engineering manager. Refer to specific items identified in the Appendix listing exemptions for limitations.

	S3. DRIVEN DEEP FOUNDATIONS (PILES):			
	Test or Special Inspection	Type	Performed By	Code References and Notes
☐	a. Verify pile materials, sizes and lengths comply with the requirements.	Continuous	GE*	* By geotechnical engineer or his or her qualified representative.
☐	b. Determine capacities of test piles and conduct additional load tests as required.	Test	LOR*	* Under the supervision of the geotechnical engineer.

DSA 103-22: LISTING OF STRUCTURAL TESTS & SPECIAL INSPECTIONS (SOILS), 2022 CBC

Table 1705A,6, Table 1705A,7, Table 1705A,8

Application Number: 04-122194 | School Name: Pre Check | School District: Daktronics, Inc.
DSA File Number: | Increment Number: | Date Created: 2023-04-20 22:42:50

	Test or Special Inspection	Type	Performed By	Code References and Notes
☐	c. Inspect driving operations and maintain complete and accurate records for each pile.	Continuous	GE*	* By geotechnical engineer or his or her qualified representative.
☐	d. Verify locations of piles and their plumbness, confirm type and size of hammer, record number of blows per foot of penetration, determine required penetrations to achieve design capacity, record tip and butt elevations and record any pile damage.	Continuous	GE*	* By geotechnical engineer or his or her qualified representative.
☐	e. Steel piles.	Provide tests and inspections per STEEL section below.		
☐	f. Concrete piles and concrete filled piles.	Provide tests and inspections per CONCRETE section below.		
☐	g. For specialty piles, perform additional inspections as determined by the registered design professional in responsible charge.	*	*	* As defined on drawings or specifications.

	S4. CAST-IN-PLACE DEEP FOUNDATIONS (PIERS):			
	Test or Special Inspection	Type	Performed By	Code References and Note
☑	a. Inspect drilling operations and maintain complete and accurate records for each pier.	Continuous	PI	Continuous inspection to be provided by project inspector. Refer to specific items identified in the Appendix listing exemptions for limitations.
☑	b. Verify pier locations, diameters, plumbness and lengths,Record concrete or grout volumes.	Continuous	PI	Continuous inspection to be provided by project inspector. Refer to specific items identified in the Appendix listing exemptions for limitations.
☑	c. Concrete piers.	Provide tests and inspections per CONCRETE section below.		

PRE-CHECK (PC) DOCUMENT
CODE: 2022 CBC
A SEPARATE PROJECT APPLICATION FOR CONSTRUCTION IS REQUIRED.
VECTOR ENGINEERS
WELLS L. HOLMES, S.E.
651 W. GALENA PARK BLVD. STE. 101
DRAPER, UTAH 84020
(801) 990-1775
(801) 990-1776 FAX
REGISTERED PROFESSIONAL ENGINEER WELLS HOLMES S.E. 5203 STRUCTURAL STATE OF CALIFORNIA
08/07/2023
STRUCTURAL ENGINEER OF RECORD

DSA 103-22: LISTING OF STRUCTURAL TESTS & SPECIAL INSPECTIONS (SOILS), 2022 CBC

Table 1705A,6, Table 1705A,7, Table 1705A,8

Application Number: 04-122194 | School Name: Pre Check | School District: Daktronics, Inc.
DSA File Number: | Increment Number: | Date Created: 2023-04-20 22:42:50

	Test or Special Inspection	Type	Performed By	Code References and Notes
	SS. RETAINING WALLS:			
	Test or Special Inspection	Type	Performed By	Code References and Notes
☐	a. Placement, compaction and inspection of backfill.	Continuous	GE*	1705A,6.1, * By geotechnical engineer or his or her qualified representative. (See section S2 above).
☐	b. Placement of soil reinforcement and/or drainage devices.	Continuous	GE*	* By geotechnical engineer or his or her qualified representative.
☐	c. Segmental retaining walls; inspect placement of units, dowels, connectors, etc.	Continuous	GE*	* By geotechnical engineer or his or her qualified representative. See DSA IR 18-2.
☐	d. Concrete retaining walls.	Provide tests and inspections per CONCRETE section below.		
☐	e. Masonry retaining walls.	Provide tests and inspections per MASONRY section below.		

	S6. OTHER SOILS:			
	Test or Special Inspection	Type	Performed By	Code References and Notes
☐	a. Soil Improvements	Test	GE*	Submit a comprehensive report documenting final soil improvements constructed, construction observation and the results of the confirmation testing and analysis to CGS (California Geological Survey) for final acceptance. * By geotechnical engineer or his or her qualified representative.
☐	b. Inspection of Soil Improvements	Continuous	GE*	* By geotechnical engineer or his or her qualified representative.
☐	c.			

DSA 103-22: LISTING OF STRUCTURAL TESTS & SPECIAL INSPECTIONS (CONCRETE), 2022 CBC

Table 1705A,3; ACI 318-19 Sections 26,12 & 26,13

Application Number: 04-122194 | School Name: Pre Check | School District: Daktronics, Inc.
DSA File Number: | Increment Number: | Date Created: 2023-04-20 22:42:50

	C1. CAST-IN-PLACE CONCRETE			
	Test or Special Inspection	Type	Performed By	Code References and Notes
☑	a. Verify use of required design mix.	Periodic	SI	Table 1705A,3 Item 5, 1910A,1.
☑	b. Identify, sample, and test reinforcing steel.	Test	LOR	1910A,2; ACI 318-19 Ch.20 and Section 26,6.1.2; DSA IR 17-10. (See Appendix (end of this form) for exemptions.)
☑	c. During concrete placement, fabricate specimens for strength tests, perform slump and air content tests, and determine the temperature of the concrete.	Test	LOR	Table 1705A,3 Item 6; ACI 318-19 Sections 26,5 & 26,12.
☑	d. Test concrete (f'c).	Test	LOR	1905A,1.17; ACI 318-19 Section 26,12.
☑	e. Batch plant inspection: Eliminated	See Notes	SI	Default of 'Continuous' per 1705A,3.3. If approved by DSA, batch plant inspection may be reduced to 'Periodic' subject to requirements in Section 1705A,3.3.1, or eliminated per 1705A,3.3.2. See IR 17-13. (See Appendix (end of this form) for exemptions.)
☐	f. Welding of reinforcing steel.	Provide special inspection per STEEL, Category S/A4(d) & (e) and/or S/A5(g) & (h) below.		

	C2. PRESTRESSED / POST-TENSIONED CONCRETE (IN ADDITION TO SECTION C1):			
	Test or Special Inspection	Type	Performed By	Code References and Notes
☐	a. Sample and test prestressing tendons and anchorages.	Test	LOR	1705A,3.4, 1910A,3
☐	b. Inspect placement of prestressing tendons.	Periodic	SI	1705A,3.4, Table 1705A,3 Items 1 & 9.

DSA 103-22: LISTING OF STRUCTURAL TESTS & SPECIAL INSPECTIONS (CONCRETE), 2022 CBC

Table 1705A,3; ACI 318-19 Sections 26,12 & 26,13

Application Number: 04-122194 | School Name: Pre Check | School District: Daktronics, Inc.
DSA File Number: | Increment Number: | Date Created: 2023-04-20 22:42:50

	Test or Special Inspection	Type	Performed By	Code References and Notes
☐	c. Verify in-situ concrete strength prior to stressing of post-tensioning tendons.	Periodic	SI	Table 1705A,3 Item 13, Special inspector to verify specified concrete strength test prior to stressing.
☐	d. Inspect application of post-tensioning or prestressing forces and grouting of bonded prestressing tendons.	Continuous	SI	1705A,3.4, Table 1705A,3 Item 9; ACI 318-14 Section 26,13

	C3. PRECAST CONCRETE (IN ADDITION TO SECTION C1):			
	Test or Special Inspection	Type	Performed By	Code References and Notes
☐	a. Inspect fabrication of precast concrete members.	Continuous	SI	ACI 318-19 Section 26,13.
☐	b. Inspect erection of precast concrete members.	Periodic	SI*	Table 1705A,3 Item 10, * May be performed by PI when specifically approved by DSA.
☐	c. For precast concrete diaphragm connections or reinforcement at joints classified as moderate or high deformability elements (MDE or HDE) in structures assigned to Seismic Design Category D, E or F, inspect such connections and reinforcement in the field for: 1. Installation of the embedded parts 2. Completion of the continuity of reinforcement across joints. 3. Completion of connections in the field.	Continuous	SI	Table 1705A,3; ACI 318-19 Section 26,13,1,3; ACI 550,5
☐	d. Inspect installation tolerances of precast concrete diaphragm connections for compliance with ACI 550,5.	Periodic	SI	Table 1705A,3; ACI 318-19 Section 26,13,1,3; ACI 550,5

APPROVED
DIV. OF THE STATE ARCHITECT
APP: 04-122194 PC
REVIEWED FOR
SS ☑ FLS ☑ ACS ☑ CG ☐
DATE: 09/18/2023

PROJECT-SPECIFIC APPROVALS

DSA 103-22: LISTING OF STRUCTURAL TESTS & SPECIAL INSPECTIONS (CONCRETE), 2022 CBC

Table 1705A,3; ACI 318-19 Sections 26,12 & 26,13

Application Number: 04-122194 | School Name: Pre Check | School District: Daktronics, Inc.
DSA File Number: | Increment Number: | Date Created: 2023-04-20 22:42:50

	C4. SHOTCRETE (IN ADDITION TO SECTION C1):			
	Test or Special Inspection	Type	Performed By	Code References and Notes
☐	a. Inspect shotcrete placement for proper application techniques.	Continuous	SI	1705A,3,9, Table 1705A,3 Item 7, 1908A,1, 1908A,2, 1908A,3, See ACI 506.2-13 Section 3,4, ACI 506R-16.
☐	b. Sample and test shotcrete (Fc).	Test	LOR	1908A,2, 1705A,3.9

	C5. POST-INSTALLED ANCHORS:			
	Test or Special Inspection	Type	Performed By	Code References and Notes
☐	a. Inspect installation of post-installed anchors	See Notes	SI*	1617A,1,19, Table 1705A,3 Item 4a (Continuous) & 4b (Periodic), 1705A,3,8 (See Appendix (end of this form) for exemptions), ACI 318-14 Sections 17,8 & 26,13, * May be performed by the project inspector when specifically approved by DSA.
☐	b. Test post-installed anchors.	Test	LOR	1910A,5, (See Appendix (end of this form) for exemptions.)

	C6. OTHER CONCRETE:			
	Test or Special Inspection	Type	Performed By	Code References and Notes
☐	a.			

DSA 103-22: LISTING OF STRUCTURAL TESTS & SPECIAL INSPECTIONS (STEEL AND ALUMNINUM), 2022 CBC

1705A.2.1, Table 1705A.2.1; AISC 303-16, AISC 341-16, AISC 358-16, AISC 360-16; AISI S100-20; RCSC 2014; AWS D1.1, AWS D1.2, AWS D1.3, AWS D1.4, AWS D1.8

Application Number: 04-122194 | School Name: Pre Check | School District: Daktronics, Inc.
DSA File Number: | Increment Number: | Date Created: 2023-04-20 22:42:50

	S/A1, STRUCTURAL STEEL, COLD-FORMED STEEL AND ALUMINUM USED FOR STRUCTURAL PURPOSES			
	Test or Special Inspection	Type	Performed By	Code References and Notes
☑	a.Verify identification of all materials and: Mill certificates indicate material properties that comply with requirements. Material sizes, types and grades comply with requirements.	Periodic	*	Table 1705A,2.1 Item 3a-3c, 2202A,1, AISI S100-20 Section A3,1 & A3.2, AISI S240-20 Section A3 & A5, AISI S220-20 Sections A4 & A6. * By special inspector or qualified technician when performed off-site.
☑	b.Test unidentified materials	Test	LOR	2202A,1.
☑	c.Examine seam welds of HSS shapes	Periodic	SI	DSA IR 17-3.
☑	d.Verify and document steel fabrication per DSA-approved construction documents.	Periodic	SI	Not applicable to cold-formed steel light-frame construction, except for trusses (1705A,2.4).
☐	e.Buckling restrained braces.	Test	LOR	Testing and special inspections in accordance with IR 22-4.

	S/A2, HIGH-STRENGTH BOLTS:			
	Test or Special Inspection	Type	Performed By	Code References and Notes
☑	a.Verify identification markings and manufacturer's certificates of compliance conform to ASTM standards specified in the DSA-approved documents.	Periodic	SI	Table 1705A,2.1 Items 1a & 1b, 2202A,1; AISC 360-16 Section A3.3, J3.1, and N3.2; RCSC 2014 Section 1,5 & 2,1; DSA IR 17-8 & DSA IR 17-9,
☑	b.Test high-strength bolts, nuts and washers.	Test	LOR	Table 1705A,2.1 Item 1c, 2213A,1; RCSC 2014 Section 7,2; DSA IR 17-8.
☑	c.Bearing-type (snug tight) connections.	Periodic	SI	Table 1705A,2.1 Item 2a, 1705A,2.6, 2204A,2; AISC 360-16 J3.1, J3.2, M2.5 & N5.6; RCSC 2014 Section 9,1; DSA IR 17-9,
☐	d.Pretensioned and slip-critical connections.	*	SI	Table 1705A,2.1 Items 2b & 2c, 1705A,2.6, 2204A,2; AISC 360-16 J3.1, J3.2, M2.5 & N5.6; RCSC 2014 Sections 9,2 & 9,3; DSA IR 17-9. * Continuous or Periodic depends on the tightening method used.

DSA 103-22: LISTING OF STRUCTURAL TESTS & SPECIAL INSPECTIONS (STEEL AND ALUMNINUM), 2022 CBC

1705A.2.1, Table 1705A.2.1; AISC 303-16, AISC 341-16, AISC 358-16, AISC 360-16; AISI S100-20; RCSC 2014; AWS D1.1, AWS D1.2, AWS D1.3, AWS D1.4, AWS D1.8

Application Number: 04-122194 | School Name: Pre Check | School District: Daktronics, Inc.
DSA File Number: | Increment Number: | Date Created: 2023-04-20 22:42:50

	S/A3, WELDING:			
	Test or Special Inspection	Type	Performed By	Code References and Notes
☑	a.Verify weld filler material identification markings per AWS designation listed on the DSA-approved documents and the WPS.	Periodic	SI	1705A,2.5, Table 1705A,2.1 Items 4 & 5; AWS D1,1 and AWS D1,8 for structural steel; AWS D1,2 for Aluminum; AWS D1,3 for cold-formed steel; AWS D1,4 for reinforcing steel; DSA IR 17-3,
☑	b.Verify weld filler material manufacturer's certificate of compliance.	Periodic	SI	DSA IR 17-3,
☑	c.Verify WPS, welder qualifications and equipment.	Periodic	SI	DSA IR 17-3,

	S/A4, SHOP WELDING (IN ADDITION TO SECTION S/A3):			
	Test or Special Inspection	Type	Performed By	Code References and Notes
☑	a.Inspect groove welds, multi-pass fillet welds, single pass fillet welds > 5/16", plug and slot welds.	Continuous	SI	Table 1705A,2.1 Items 5a,1-4; AISC 360-16 (and AISC 341-16 as applicable); DSA IR 17-3,
☑	b.Inspect single-pass fillet welds ≤ 5/16", floor and roof deck welds.	Periodic	SI	1705A,2.2, Table 1705A,2.1 Items 5a,5 & 5a,6; AISC 360-16 (and AISC 341-16 as applicable); DSA IR 17-3,
☐	c.Inspect welding of stairs and railing systems.	Periodic	SI	1705A,2.1; AISC 360-16 (and AISC 341-16 as applicable); AWS D1,1 & D1.3; DSA IR 17-3,
☐	d.Verification of reinforcing steel weldability other than ASTM A706.	Periodic	SI	1705A,3.1; AWS D1.4; DSA IR 17-3, Verify carbon equivalent reported on mill certificates.
☐	e.Inspect welding of reinforcing steel.	Continuous	SI	Table 1705A,2.1 Item 5b, 1705A,3.1, Table 1705A,3 Item 2, 1903A,8;AWS D1.4; DSA IR 17-3.

PRE-CHECK (PC) DOCUMENT
Code: 2022 CBC
A separate project application for construction is required.

DAKTRONICS
THE CONCEPTS EXPRESSED AND DETAILS SHOWN ON THIS DRAWING ARE CONFIDENTIAL AND PROPRIETARY. DO NOT REPRODUCE BY ANY MEANS WITHOUT THE EXPRESS WRITTEN CONSENT OF DAKTRONICS, INC. OR ITS WHOLLY OWNED SUBSIDIARIES. COPYRIGHT 2022 DAKTRONICS, INC. ALL RIGHTS RESERVED.
THIRD ANGLE PROJECTION
PROJECT: 2022 CBC DSA PRE-CHECK DRAWINGS
TITLE: SHEET 2; DSA 103 SPECIAL INSPECTION FORM
DATE: 8 MAR 23 | DIM UNITS: INCHES [MILLIMETERS] | SHEET | REV
SCALE: 1/4" = 1'-0" | DO NOT SCALE DRAWING | 2 | A
DESIGN: KKURTEN | JOB NO. P2236 | FUNC - TYPE - SIZE F - 10 - D | 5224618
DRAWN: SEASTMA

DSA 103-22: LISTING OF STRUCTURAL TESTS & SPECIAL INSPECTIONS (STEEL AND ALUMNINUM), 2022 CBC

1705A.2.1, Table 1705A.2.1; AISC 303-16, AISC 341-16, AISC 358-16, AISC 360-16; AISI S100-20; RCSC 2014; AWS D1.1, AWS D1.2, AWS D1.3, AWS D1.4, AWS D1.8

Application Number: 04-122194
DSA File Number:
School Name: Pre Check
Increment Number:
School District: Daktronics, Inc.
Date Created: 2023-04-20 22:42:50

	Test or Special Inspection	Type	Performed By	Code References and Notes
	S/A5, FIELD WELDING (IN ADDITION TO SECTION S/A3):			
	Test or Special Inspection	Type	Performed By	Code References and Notes
☑	a.Inspect groove welds, multi-pass fillet welds, single pass fillet welds > 5/16", plug and slot welds.	Continuous	SI	Table 1705A.2.1 Items 5a.1– 4; AISC 360-16 (AISC 341-16 as applicable); DSA IR 17-3.
☑	b.Inspect single-pass fillet welds ≤ 5/16",	Periodic	SI	Table 1705A.2.1 Item 5a.5; AISC 360-16 (AISC 341-16 as applicable); DSA IR 17-3.
☐	c.Inspect end-welded studs (ASTM A-108) installation (including bend test).	Periodic	SI	2213A.2; AISC 360-16 (AISC 341-16 as applicable); AWS D1.1; DSA IR 17-3.
☐	d.Inspect floor and roof deck welds.	Periodic	SI	1705A.2.2, Table 1705A.2.1 Item 5a.6; AISC 360-16 (AISC 341-16 as applicable); AWS D1.3; DSA IR 17-3.
☐	e.Inspect welding of structural cold-formed steel.	Periodic	SI*	1705A.2.5; AWS D1.3; DSA IR 17-3. The quality control provisions of AISI S240-20 Chapter D shall also apply. * May be performed by the project inspector when specifically approved by DSA.
☐	f.Inspect welding of stairs and railing systems.	Periodic	SI*	1705A.2.1;AISC 360-16 (AISC 341-16 as applicable); AWS D1.1 & D1.3; DSA IR 17-3. * May be performed by the project inspector when specifically approved by DSA.
☐	g.Verification of reinforcing steel weldability.	Periodic	SI	1705A.3.1; AWS D1.4; DSA IR 17-3. Verify carbon equivalent reported on mill certificates.
☐	h.Inspect welding of reinforcing steel.	Continuous	SI	Table 1705A.2.1 Item 5b, 1705A.3.1, Table 1705A.3 Item 2, 1903A.8,AWS D1.4; DSA IR 17-3.

DSA 103-22: LISTING OF STRUCTURAL TESTS & SPECIAL INSPECTIONS (STEEL AND ALUMNINUM), 2022 CBC

1705A.2.1, Table 1705A.2.1; AISC 303-16, AISC 341-16, AISC 358-16, AISC 360-16; AISI S100-20; RCSC 2014; AWS D1.1, AWS D1.2, AWS D1.3, AWS D1.4, AWS D1.8

Application Number: 04-122194
DSA File Number:
School Name: Pre Check
Increment Number:
School District: Daktronics, Inc.
Date Created: 2023-04-20 22:42:50

	Test or Special Inspection	Type	Performed By	Code References and Notes
	S/A6, NONDESTRUCTIVE TESTING:			
	Test or Special Inspection	Type	Performed By	Code References and Notes
☐	a. Ultrasonic	Test	LOR	1705A.2.1, 1705A.2.5; AISC 341-16 J6.2, AISC 360-16 N5.5; AWS D1.1, AWS D1.8; DSA IR 17-2.
☐	b. Magnetic Particle	Test	LOR	1705A.2.1, 1705A.2.5; AISC 341-16 J6.2, AISC 360-16 N5.5; AWS D1.1, AWS D1.8; DSA IR 17-2.
☐	c.	Test	LOR	

	S/A7. STEEL JOISTS AND TRUSSES:			
	Test or Special Inspection	Type	Performed By	Code References and Notes
☐	a. Verify size, type and grade for all chord and web members as well as connectors and weld filler material; verify joist profile, dimensions and camber (if applicable); verify all weld locations, lengths and profiles; mark or tag each joist.	Continuous	SI	1705A.2.3, Table 1705A.2.3; AWS D1.1; DSA IR 22-3 for steel joists only. 1705A.2.4; AWS D1.3 for cold-formed steel trusses.

DSA 103-22: LISTING OF STRUCTURAL TESTS & SPECIAL INSPECTIONS (STEEL AND ALUMNINUM), 2022 CBC

1705A.2.1, Table 1705A.2.1; AISC 303-16, AISC 341-16, AISC 358-16, AISC 360-16; AISI S100-20; RCSC 2014; AWS D1.1, AWS D1.2, AWS D1.3, AWS D1.4, AWS D1.8

Application Number: 04-122194
DSA File Number:
School Name: Pre Check
Increment Number:
School District: Daktronics, Inc.
Date Created: 2023-04-20 22:42:50

	Test or Special Inspection	Type	Performed By	Code References and Notes
	S/A8, SPRAYED FIRE-RESISTANT MATERIALS:			
	Test or Special Inspection	Type	Performed By	Code References and Notes
☐	a. Examine structural steel surface conditions, inspect application, take samples, measure thickness and verify compliance of all aspects of application with DSA-approved documents.	Periodic	SI	1705A.15, 1705A.1, 1705A.2, 1705A.3, 1705A.4.
☐	b. Test density.	Test	LOR	1705A.15.1, 1705A.15.5, ASTM E736
☐	c. Bond strength adhesion/cohesion.	Test	LOR	1705A.15.1, 1705A.15.4, ASTM E605

	S/A9. ANCHOR BOLTS AND ANCHOR RODS:			
	Test or Special Inspection	Type	Performed By	Code References and Notes
☐	a. Anchor Bolts and Anchor Rods	Test	LOR	Sample and test anchor bolts and anchor rods not readily identifiable per procedures noted in DSA IR 17-11.
☐	b. Threaded rod not used for foundation anchorage.	Test	LOR	Sample and test threaded rods not readily identifiable per procedures noted in DSA IR 17-11.

	S/A10. STORAGE RACK SYSTEMS:			
	Test or Special Inspection	Type	Performed By	Code References and Notes
☐	a. Materials used, to verify compliance with one or more of the material test reports in accordance with the approved construction documents.	Periodic	SI	Table 1705A.13.7
☐	b. Fabricated storage rack elements.	Periodic	SI	1704A.2.5; Table 1705A.13.7

DSA 103-22: LISTING OF STRUCTURAL TESTS & SPECIAL INSPECTIONS (STEEL AND ALUMNINUM), 2022 CBC

1705A.2.1, Table 1705A.2.1; AISC 303-16, AISC 341-16, AISC 358-16, AISC 360-16; AISI S100-20; RCSC 2014; AWS D1.1, AWS D1.2, AWS D1.3, AWS D1.4, AWS D1.8

Application Number: 04-122194
DSA File Number:
School Name: Pre Check
Increment Number:
School District: Daktronics, Inc.
Date Created: 2023-04-20 22:42:50

	Test or Special Inspection	Type	Performed By	Code References and Notes
☐	c. Storage rack anchorage installation.	Periodic	SI	ANSI/MH16.1 Section 7.3.2; Table 1705A.13.7
☐	d. Completed storage rack system to indicate compliance with the approved construction documents.	Periodic	SI*	Table 1705A.13.7; * May be preformed by the project inspector when specifically approved by DSA.

	S/A11. Other Steel			
	Test or Special Inspection	Type	Performed By	Code References and Notes
☐	a.			

Appendix: Work Exempt from DSA Requirements for Structural Tests / Special Inspections

Application Number: 04-122194
DSA File Number:
School Name: Pre Check
Increment Number:
School District: Daktronics, Inc.
Date Created: 2023-04-20 22:42:50

Exempt items given in DSA IR A-22 or the 2019 CBC (including DSA amendments) and those items identified below with a check mark by the design professional are NOT subject to DSA requirements for the structural tests / special inspections noted. Items marked as exempt shall be identified on the approved construction documents. The project inspector shall verify all construction complies with the approved construction documents.

	SOILS:
☐	1. Deep foundations acting as a cantilever footing with a design based on minimum allowable pressures per CBC Table 1806A.2 and without a geotechnical report for the following cases: A) free standing sign or scoreboard, B) cell or antenna towers and poles less than 35'-0" tall (e.g., lighting poles, flag poles, poles supporting open mesh fences, etc.), C) single-story structure with dead load less than 5 psf (e.g., open fabric shade structure), or D) covered walkway structure with an apex height less than 10'-0" above adjacent grade.
☐	2. Shallow foundations, etc. are exempt from special inspections and testing by a Geotechnical Engineer for the following cases: A) buildings without a geotechnical report and meeting the exception item #1 criteria in CBC Section 1803A.2 supported by native soil (any excavation depth) or fill soil (not exceeding 12" depth per CBC Section 1804A.6), B) soil scarification/recompaction not exceeding 12" depth, C) native or fill soil supporting exterior non-structural flatwork (e.g., sidewalks, site concrete ramps, site stairs, parking lots, driveways, etc.), D) unpaved landscaping and playground areas, or E) utility trench backfill.

	CONCRETE/MASONRY:
☐	1. Post-installed anchors for the following: A) exempt non-structural components (e.g., mechanical, electrical, plumbing equipment - see item 7 for "Welding" in the Appendix below) given in CBC Section 1617A.1.18 (which replaces ASCE 7-16, Section 13.1.4) or B) interior nonstructural wall partitions meeting criteria listed in exempt item 3 for "Welding" in the Appendix below
☑	2. Concrete batch plant inspection is not required for items given in CBC Section 1705A.3.3.2 subject to the requirements and limitations in that section.
☐	3. Non-bearing non-shear masonry walls may be exempt from certain DSA masonry testing and special inspection items as allowed per DSA IR 21-1. Refer to construction documents for specific exemptions accordingly for each applicable wall condition.
☐	4. Epoxy shear dowels in site flatwork and/or other non-structural concrete.

Appendix: Work Exempt from DSA Requirements for Structural Tests / Special Inspections

Application Number: 04-122194
DSA File Number:
School Name: Pre Check
Increment Number:
School District: Daktronics, Inc.
Date Created: 2023-04-20 22:42:50

	CONCRETE/MASONRY:
☐	5. Testing of reinforcing bars is not required for items given in CBC Section 1910A.2 subject to the requirements and limitations in that section.

	WELDING:
☐	1. Solid-clad and open-mesh fences, gates with maximum leaf span of 10', and gates with a maximum rolling section of 10' all having an apex height less than 8'-0" above lowest adjacent grade. When located above circulation or occupied space below, these gates/fences are not located within 1.5x gate/fence height (max 8'-0") to the edge of floor or roof.
☐	2. Handrails, guardrails, and modular or relocatable ramps associated with walking surfaces less than 30" above adjacent grade (excluding post base connections per the 'Exception' language in Section 1705A.2.1); fillet welds shall not be ground flush.
☐	3. Non-structural interior cold-formed steel framing spanning less than 15'-0", such as in interior partitions, interior soffits, etc. supporting only self weight and light-weight finishes or adhered tile, masonry, stone, or terra cotta veneer no more than 5/8" thickness and apex less than 20'-0" in height and not over an exit way. Maximum tributary load to a member shall not exceed the equivalent of that occurring from a 10'x10' opening in a 15' tall wall for a header or king stud.
☐	4. Manufactured support frames and curbs using hot rolled or cold-formed steel (i.e., light gauge) for mechanical, electrical, or plumbing equipment weighing less than 2000# (equipment only) (connections of such frames to superstructure elements using welding will require special inspection as noted in selected item(s) for Sections S/A3, S/A4 and/or S/A5 of listing above).
☐	5. Manufactured components (e.g., Tolco, B-Line, Afcon, etc.) for mechanical, electrical, or plumbing hanger support and bracing (connections of such components to superstructure elements using welding will require special inspection as noted in selected item(s) for Sections S/A3, S/A4 and/or S/A5 of listing above).
☐	6. TV Brackets, projector mounts with a valid listing (see DSA IR A-5) and recreational equipment (e.g., playground structures, basketball backstops, etc.) (connections of such elements to superstructure elements using welding will require special inspection as noted in selected item(s) for sections S/A3, S/A4 and/or S/A5 located in the Steel/Aluminum category of listing above).
☐	7. Any support for exempt non-structural components given in CBC Section 1617A.1.18 (which replaces ASCE 7-16, Section 13.1.4) meeting the following: A) when supported on a floor/roof, <400# and resulting composite center of mass (including component's center of mass) d4' above supporting floor/roof, B) when hung from a wall or roof/floor, <20# for discrete units or <5 plf for distributed systems.

DSA 103-22: LISTING OF STRUCTURAL TESTS & SPECIAL INSPECTIONS(SIGNATURE), 2022 CBC

Application Number: 04-122194
DSA File Number:
School Name: Pre Check
Increment Number:
School District: Daktronics, Inc.
Date Created: 2023-04-20 22:42:50

Name of Architect or Engineer in general responsible charge:
Wells L. Holmes

Name of Structural Engineer (When structural design has been delegated):

Signature of Architect or Structural Engineer: Date: 04/24/2023

Note: To facilitate DSA electronic mark-ups and identification stamp application, DSA recommends against using secured electronic or digital signatures.

DSA STAMP

DSA 103-22: LIST OF REQUIRED VERIFIED REPORTS, CBC 2022

Application Number: 04-122194
DSA File Number:
School Name: Pre Check
Increment Number:
School District: Daktronics, Inc.
Date Created: 2023-04-20 22:42:50

1. Structural Testing and Inspection: Laboratory Verified Report Form DSA 291
2. Shop Welding Inspection: Laboratory Verified Report Form DSA 291, or, for independently contracting SI, Special Inspection Verified Report Form DSA 292
3. Field Welding Inspection: Laboratory Verified Report Form DSA 291, or, for independently contracting SI, Special Inspection Verified Report Form DSA 292
4. High-Strength Bolt Installation Inspection: Laboratory Verified Report Form DSA 291, or, for independently contracting SI, Special Inspection Verified Report Form DSA 292

PRE-CHECK (PC) DOCUMENT

CODE: 2022 CBC

A SEPARATE PROJECT APPLICATION FOR CONSTRUCTION IS REQUIRED.

VECTOR ENGINEERS
WELLS L. HOLMES, S.E.
651 W. GALENA PARK BLVD. STE. 101
DRAPER, UTAH 84020
(801) 990-1775
(801) 990-1776 FAX

REGISTERED PROFESSIONAL ENGINEER
WELLS HOLMES
S 8203
STRUCTURAL
STATE OF CALIFORNIA

08/07/2023

STRUCTURAL ENGINEER OF RECORD

APPROVED
DIV. OF THE STATE ARCHITECT
APP: 04-122194 PC
REVIEWED FOR
SS ☑ FLS ☑ ACS ☑ CG ☐
DATE: 09/18/2023

PROJECT-SPECIFIC APPROVALS

PRE-CHECK (PC) DOCUMENT
Code: 2022 CBC
A separate project application for construction is required.

THE CONCEPTS EXPRESSED AND DETAILS SHOWN ON THIS DRAWING ARE CONFIDENTIAL AND PROPRIETARY. DO NOT REPRODUCE BY ANY MEANS WITHOUT THE EXPRESS WRITTEN CONSENT OF DAKTRONICS, INC. OR ITS WHOLLY OWNED SUBSIDIARIES. COPYRIGHT 2020 DAKTRONICS, INC. [USA]

THIRD ANGLE PROJECTION

PROJECT:	2022 CBC DSA PRE-CHECK DRAWINGS		
TITLE:	SHEET 3, DSA 103 SPECIAL INSPECTION FORM (CONT.)		
DATE: 8 MAR 23	DIM UNITS: INCHES [MILLIMETERS]	SHEET	REV
SCALE: 1/4" = 1'-0"	DO NOT SCALE DRAWING	3	A
DESIGN: KKURTEN	JOB NO.	FUNC - TYPE - SIZE	5224619
DRAWN: SEASTMA	P2236	F - 10 - D	

COLUMN IS A W-FLANGE,
MAXIMUM FLANGE WIDTH IS 16".

MINIMUM CLAMPS PER SECTION:
2 COLUMN STRUCTURES: 8
3 COLUMN STRUCTURES: 12
INSTALL TORQUE: 40 FT*LBS

MAXIMUM SECTION HEIGHT IS 10'-0"

MAXIMUM SECTION WEIGHT
-12 PSF

I-BEAM LIMITATIONS
-MIN. FLANGE THICKNESS = 3/16"
-MAX.FLANGE THICKNESS = 3/4"
-IF THE I-BEAM FLANGE THICKNESS IS GREATER THAN SPECIFIED, LONGER BOLTS WILL BE REQUIRED AT THE CUSTOMER'S EXPENSE. MAX LENGTH OF REPLACEMENT BOLT IS 3.5". MUST BE SS304 BOLTS.

MOUNTING DETAIL 4

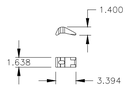

LAYOUT VIEW
AD PANEL CLAMP
(6061-T6 ALUMINUM)

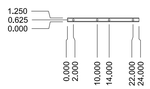

FRONT VIEW
MOUNTING CHANNEL (6061-T6)
FOR USE WITH 3 1/4" UNISTRUT

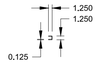

SIDE VIEW
MOUNTING CHANNEL (6061-T6)
FOR USE WITH 3 1/4" UNISTRUT

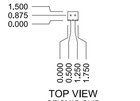

TOP VIEW
SEISMIC CLIP
5052-H32 ALUMINUM
FOR USE WITH 3 1/4" UNISTRUT

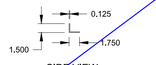

SIDE VIEW
SEISMIC CLIP
FOR USE WITH 3 1/4" UNISTRUT

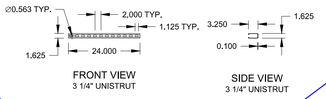

FRONT VIEW
3 1/4" UNISTRUT

SIDE VIEW
3 1/4" UNISTRUT

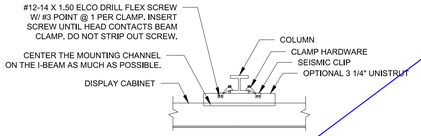

TOP VIEW

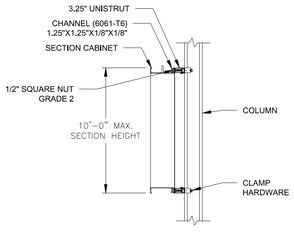

SIDE VIEW
WITH OPTIONAL 3 1/4" UNISTRUT

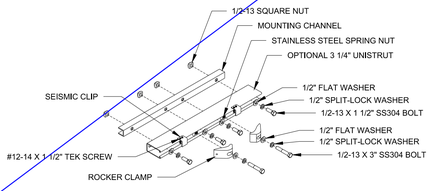

EXPLODED VIEW
WITH 3 1/4" UNISTRUT

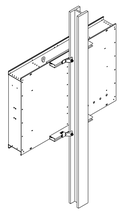

ISOMETRIC VIEW
WITH 3 1/4" UNISTRUT

COLUMN IS A W-FLANGE,
MAXIMUM FLANGE WIDTH IS 16".

MINIMUM CLAMPS PER SECTION:
2 COLUMN STRUCTURES: 8
3 COLUMN STRUCTURES: 12
INSTALL TORQUE: 40 FT*LBS

MAXIMUM SECTION HEIGHT IS 6'-6"

MAXIMUM SECTION WEIGHT
-12 PSF

I-BEAM LIMITATIONS
-MIN. FLANGE THICKNESS = 3/16"
-MAX.FLANGE THICKNESS = 3/4"
-IF THE I-BEAM FLANGE THICKNESS IS GREATER THAN SPECIFIED, LONGER BOLTS WILL BE REQUIRED AT THE CUSTOMER'S EXPENSE. MAX LENGTH OF REPLACEMENT BOLT IS 3.5". MUST BE SS304 BOLTS.

MOUNTING DETAIL 6



LAYOUT VIEW
SCOREBOARD EXTRUSION
(6061-T6 ALUMINUM)

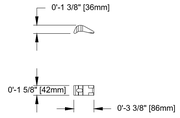

LAYOUT VIEW
SCOREBOARD CLAMP
(6061-T6 ALUMINUM)

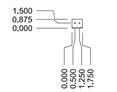

TOP VIEW
SEISMIC CLIP
5052-H32 ALUMINUM

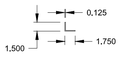

SIDE VIEW
SEISMIC CLIP

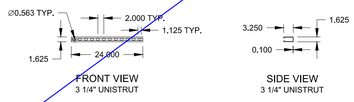

FRONT VIEW
3 1/4" UNISTRUT

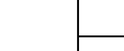

SIDE VIEW
3 1/4" UNISTRUT

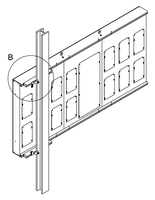

ISOMETRIC VIEW
WITH 3 1/4" UNISTRUT

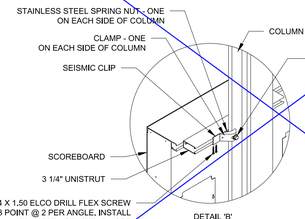

DETAIL 'B'
OPTIONAL 3 1/4" UNISTRUT

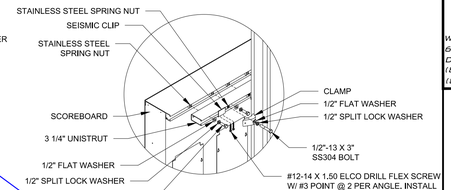

DETAIL 'B'
OPTIONAL 3 1/4" UNISTRUT
EXPLODED VIEW

COLUMN IS A W-FLANGE,
MAXIMUM FLANGE WIDTH IS 16".

MINIMUM CLAMPS PER SECTION:
2 COLUMN STRUCTURES: 8
3 COLUMN STRUCTURES: 12
INSTALL TORQUE: 40 FT*LBS

MAXIMUM SECTION HEIGHT IS 2'-6"

MAXIMUM SECTION WEIGHT
-12 PSF

I-BEAM LIMITATIONS
-MIN. FLANGE THICKNESS = 3/16"
-MAX.FLANGE THICKNESS = 3/4"
-IF THE I-BEAM FLANGE THICKNESS IS GREATER THAN SPECIFIED, LONGER BOLTS WILL BE REQUIRED AT THE CUSTOMER'S EXPENSE. MAX LENGTH OF REPLACEMENT BOLT IS 3.5". MUST BE SS304 BOLTS.

MOUNTING DETAIL 5

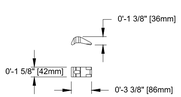

LAYOUT VIEW
AD PANEL CLAMP
(6061-T6 ALUMINUM)

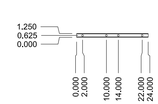

FRONT VIEW
MOUNTING CHANNEL (6061-T6)
FOR USE WITH 3 1/4" UNISTRUT

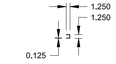

SIDE VIEW
MOUNTING CHANNEL (6061-T6)
FOR USE WITH 3 1/4" UNISTRUT

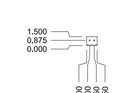

TOP VIEW
SEISMIC CLIP
5052-H32 ALUMINUM
FOR USE WITH 3 1/4" UNISTRUT



SIDE VIEW
SEISMIC CLIP
FOR USE WITH 3 1/4" UNISTRUT

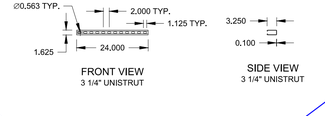

FRONT VIEW
3 1/4" UNISTRUT

SIDE VIEW
3 1/4" UNISTRUT

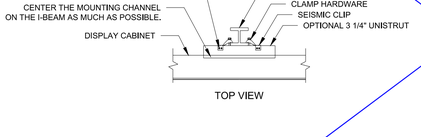

TOP VIEW

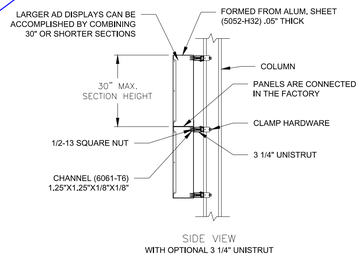

SIDE VIEW
WITH OPTIONAL 3 1/4" UNISTRUT

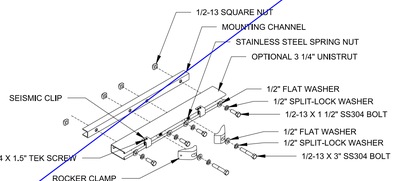

EXPLODED VIEW
WITH 3 1/4" UNISTRUT

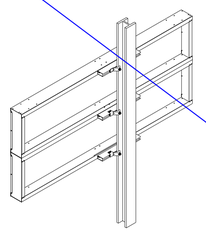

ISOMETRIC VIEW
WITH 3 1/4" UNISTRUT

COLUMN IS A W-FLANGE,
MAXIMUM FLANGE WIDTH IS 16".

MINIMUM CLAMPS PER SECTION:
2 COLUMN STRUCTURES: 8
3 COLUMN STRUCTURES: 12
INSTALL TORQUE: ROTATE THE NUT CLOCKWISE (TIGHTER) ONE FULL REVOLUTION BEYOND SNUG TIGHT. SNUG TIGHT, WHICH IS DEFINED BY THREE FACTORS:
1. ALL PLIES ARE PULLED INTO FIRM CONTACT.
2. TIGHTEN THE NUT WITH A STANDARD WRENCH.
3. NUT IS TIGHT ENOUGH TO PREVENT LOOSENING WITHOUT THE USE OF A WRENCH.

MAXIMUM SECTION HEIGHT IS 10'-6"

MAXIMUM SECTION WEIGHT
-12 PSF

I-BEAM LIMITATIONS
-MIN. FLANGE THICKNESS = 3/16"
-MAX.FLANGE THICKNESS = 3/4"
-IF THE I-BEAM FLANGE THICKNESS IS GREATER THAN SPECIFIED, LONGER BOLTS WILL BE REQUIRED AT THE CUSTOMER'S EXPENSE. REPLACEMENT BOLTS MUST BE 5/8"-11 ASTM F3125 GR. A325 HEAVY HEX, MECHANICALLY GALVANIZED PER ASTM B695 AND A MAX. LENGTH OF 4.50".

MOUNTING DETAIL 7

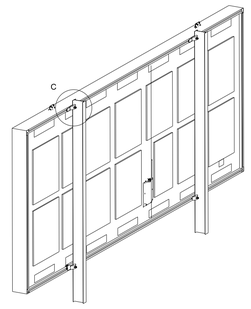

ISOMETRIC VIEW

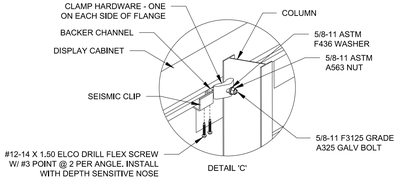

DETAIL 'C'



TOP VIEW
BACKER CHANNEL

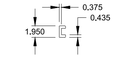

SIDE VIEW
BACKER CHANNEL

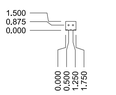

TOP VIEW
SEISMIC CLIP
5052-H32 ALUMINUM

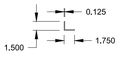

SIDE VIEW
SEISMIC CLIP

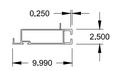

LAYOUT VIEW
VIDEO BOARD EXTRUSION
(6005A-T61 ALUMINUM
-6061-T6 ALUMINUM
-6351-T6 ALUMINUM)

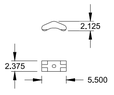

LAYOUT VIEW
DISPLAY CABINET CLAMP
(6061-T6 ALUMINUM)

PRE-CHECK (PC) DOCUMENT

CODE: 2022 CBC

A SEPARATE PROJECT APPLICATION FOR CONSTRUCTION IS REQUIRED.

VECTOR ENGINEERS
WELLS L. HOLMES, S.E.
651 W. GALENA PARK BLVD. STE. 101
DRAPER, UTAH 84020
(801) 990-1775
(801) 990-1776 FAX

REGISTERED PROFESSIONAL ENGINEER
WELLS HOLMES
S6203
STRUCTURAL
STATE OF CALIFORNIA

08/07/2023

STRUCTURAL ENGINEER OF RECORD

APPROVED
DIV. OF THE STATE ARCHITECT
APP: 04-122194 PC
REVIEWED FOR
SS ☑ FLS ☑ ACS ☑ CG ☐
DATE: 09/18/2023

PROJECT-SPECIFIC APPROVALS

PRE-CHECK (PC) DOCUMENT
Code: 2022 CBC
A separate project application for construction is required.

THE CONCEPTS EXPRESSED AND DETAILS SHOWN ON THIS DRAWING ARE CONFIDENTIAL AND PROPRIETARY. DO NOT REPRODUCE BY ANY MEANS WITHOUT THE EXPRESS WRITTEN CONSENT OF DAKTRONICS, INC. ALL RIGHTS RESERVED. COPYRIGHT 2022 DAKTRONICS, INC.-USA-

THIRD ANGLE PROJECTION

PROJECT:	2022 CBC DSA PRE-CHECK DRAWINGS				
TITLE:	SHEET 5: MOUNTING DETAILS W/ VIDEO DISPLAY				
DATE:	8 MAR 23	DIM UNITS:	INCHES [MILLIMETERS]	SHEET	REV
SCALE:	1/4" = 1'-0"		DO NOT SCALE DRAWING	5	A
DESIGN:	KKURTEN	JOB NO.	FUNC - TYPE - SIZE		
DRAWN:	SEASTMA	P2236	F - 10 - D	5224621	

COLUMN IS A W-FLANGE.
MAXIMUM FLANGE WIDTH IS 16".

MINIMUM CLAMPS PER SECTION:
2 COLUMN STRUCTURES: 8
3 COLUMN STRUCTURES: 12
INSTALL TORQUE: 40 FT*LBS

MAXIMUM SECTION HEIGHT IS 5'-0"

MAXIMUM SECTION WEIGHT
LESSER OF
-12 PSF

I-BEAM LIMITATIONS
-MIN. FLANGE THICKNESS = 3/16"
-MAX.FLANGE THICKNESS = 3/4"
-IF THE I-BEAM FLANGE THICKNESS IS GREATER THAN SPECIFIED, LONGER BOLTS WILL BE REQUIRED AT THE CUSTOMER'S EXPENSE. MAX LENGTH OF REPLACEMENT BOLT IS 3.5". MUST BE SS304 BOLTS.

LETTERING AND LOGOS ARE NOT TO COVER MORE THAN 50% OF THE DECORATIVE ELEMENT.

DESIGNED TO A CASE A WIND PRESSURE OF 34.5 psf (SERVICE LEVEL)

DECORATIVE ELEMENT COMPONENTS HAVE BEEN DESIGNED TO THE REQUIREMENTS OF CBC 2022 AND THE PARAMETERS LISTED ON THE NOTES PAGE. THESE ELEMENTS ARE NOT SUBJECT TO DSA REVIEW OR SPECIAL WELD INSPECTIONS.

MOUNTING DETAIL 8
DECORATIVE (NONSTRUCTURAL)
TRUSS ATTACHMENT

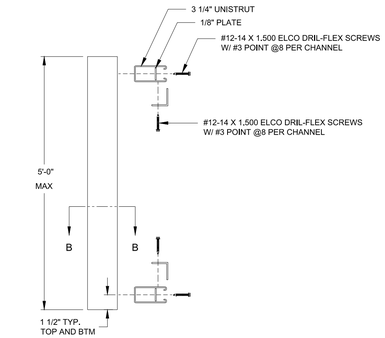

REFER TO DRAWING #4682220, SHEET 4,
MOUNTING DETAIL #4 FOR TRUSS FABRICATION DETAILS.

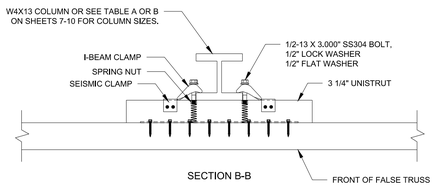

SECTION B-B

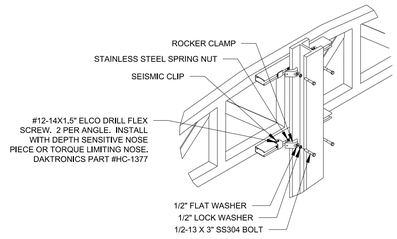

EXPLODED REAR ISOMETRIC VIEW
DECORATIVE TRUSS ATTACHMENT

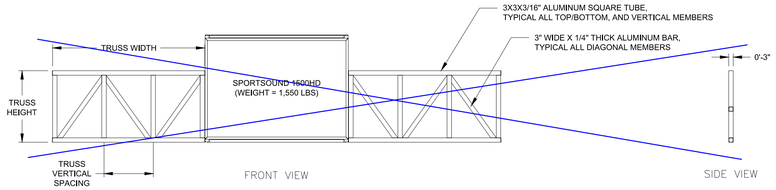

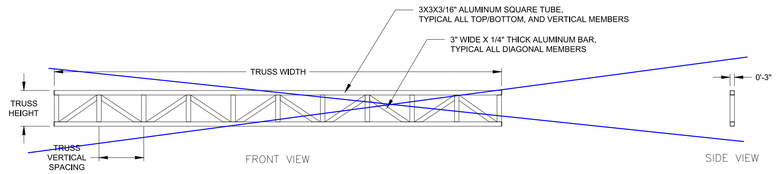

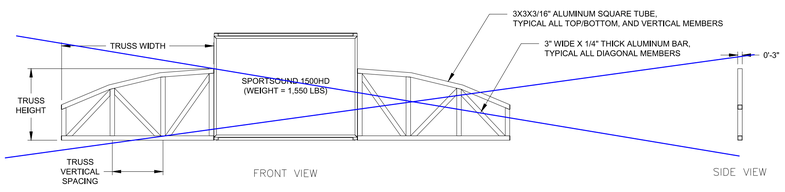

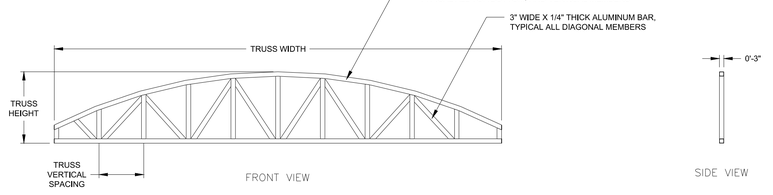

SPORTSOUND FLANKING ACCENT TRUSS						
CHECK OPTION	TRUSS WIDTH (FT)	TRUSS HEIGHT (FT)	MAXIMUM VERTICAL SPACING	NUMBER OF SUPPORTS PER TRUSS	MINIMUM SUPPORT SPACING	MAXIMUM SUPPORT SPACING
	3'-0"	3'-0"	2'-0"	2	1'-6"	2'-0"
	5'-0"	3'-0"	2'-6"	2	2'-3"	3'-0"
	5'-0"	4'-0"	2'-6"	2	2'-3"	3'-0"
	6'-0"	3'-0"	3'-0"	2	2'-10"	3'-0"
	6'-0"	4'-0"	3'-0"	2	2'-10"	3'-0"
	8'-6"	3'-0"	2'-10"	2	2'-9"	3'-4"
	8'-6"	4'-0"	2'-10"	2	2'-9"	3'-4"
	10'-0"	3'-0"	3'-4"	2	3'-3"	5'-0"
	10'-0"	4'-0"	3'-4"	2	3'-3"	5'-0"
	12'-0"	3'-0"	3'-0"	2	5'-10"	6'-11"
	12'-0"	4'-0"	3'-0"	2	5'-10"	6'-11"
	12'-6"	3'-0"	3'-4"	2	6'-2"	6'-11"
	12'-6"	4'-0"	3'-4"	2	6'-2"	6'-11"
	14'-0"	3'-0"	3'-6"	2	6'-9"	6'-11"
	14'-0"	4'-0"	3'-6"	2	6'-9"	6'-11"

FULL WIDTH ACCENT TRUSS						
CHECK OPTION	TRUSS WIDTH (FT)	TRUSS HEIGHT (FT)	MAXIMUM VERTICAL SPACING	NUMBER OF SUPPORTS	MINIMUM SUPPORT SPACING	MAXIMUM SUPPORT SPACING
	14'-0"	2'-0"	2'-6"	2	8'-6"	11'-0"
	14'-0"	3'-0"	3'-6"	2	8'-6"	11'-0"
	14'-0"	4'-0"	3'-6"	2	8'-6"	11'-0"
	16'-0"	2'-0"	3'-0"	2	8'-6"	11'-6"
	16'-0"	3'-0"	3'-0"	2	8'-6"	11'-6"
	16'-0"	4'-0"	3'-0"	2	8'-6"	11'-6"
	18'-0"	2'-0"	2'-6"	2	11'-0"	13'-0"
	18'-0"	3'-0"	3'-6"	2	11'-0"	13'-0"
	20'-0"	2'-0"	2'-6"	2	12'-0"	14'-0"
	20'-0"	3'-0"	3'-6"	2	12'-0"	14'-0"
	25'-6"	3'-0"	3'-6"	2	14'-0"	16'-0"
✔	25'-6"	4'-0"	3'-6"	2	14'-0"	16'-0"
	27'-0"	2'-0"	2'-10"	3	9'-0"	11'-0"
	27'-0"	4'-0"	3'-6"	3	9'-0"	11'-0"
	28'-0"	2'-0"	2'-10"	3	9'-6"	11'-6"
	28'-0"	3'-0"	3'-8"	3	9'-6"	11'-6"
	28'-0"	4'-0"	3'-8"	3	9'-6"	11'-6"
	30'-0"	3'-0"	3'-6"	3	10'-0"	12'-0"
	30'-0"	4'-0"	3'-8"	3	10'-0"	12'-0"
	30'-0"	5'-0"	3'-8"	3	10'-0"	12'-0"
	32'-0"	4'-0"	3'-6"	3	10'-6"	13'-0"
	32'-0"	5'-0"	3'-8"	3	10'-6"	13'-0"
	36'-0"	4'-0"	3'-8"	3	12'-0"	14'-0"
	36'-0"	5'-0"	3'-8"	3	12'-0"	14'-0"

DSA PRECHECK DRAWINGS

VECTOR ENGINEERS
WELLS L. HOLMES, S.E.
651 W. GALENA PARK BLVD. STE. 101
DRAPER, UTAH 84020
(801) 990-1775
(801) 990-1776 FAX

REGISTERED PROFESSIONAL ENGINEER
WELLS HOLMES
S 6203
STRUCTURAL
STATE OF CALIFORNIA

08/07/2023

STRUCTURAL ENGINEER OF RECORD

APPROVED
DIV. OF THE STATE ARCHITECT
APP: 04-122194 PC
REVIEWED FOR
SS ☑ FLS ☑ ACS ☑ CG ☐
DATE: 09/18/2023

PROJECT-SPECIFIC APPROVALS

PRE-CHECK (PC) DOCUMENT
Code: 2019 CBC
A separate project application for construction is required.

THE CONCEPTS EXPRESSED AND DETAILS SHOWN ON THIS DRAWING, ARE PROPRIETARY TO DAKTRONICS, INC. AND SHALL NOT BE USED BY ANY MEANS WITHOUT THE EXPRESS WRITTEN CONSENT OF DAKTRONICS, INC.,OR ITS WHOLLY OWNED SUBSIDIARIES. COPYRIGHT 2023 DAKTRONICS, INC.-USA)

THIRD ANGLE PROJECTION

PROJECT:	2022 CBC DSA PRE-CHECK DRAWINGS
TITLE:	SHEET 6, DECORATIVE ACCENT TRUSS LAYOUT
DATE:	18 JUL 23
DIM UNITS:	INCHES [MILLIMETERS]
SHEET:	6
REV:	A
SCALE:	1/4" = 1'-0"
	DO NOT SCALE DRAWING
DESIGN:	KKURTEN
DRAWN:	MLEOPOL
JOB NO.	P2236
FUNC - TYPE - SEE	F - 10 - D

5304752

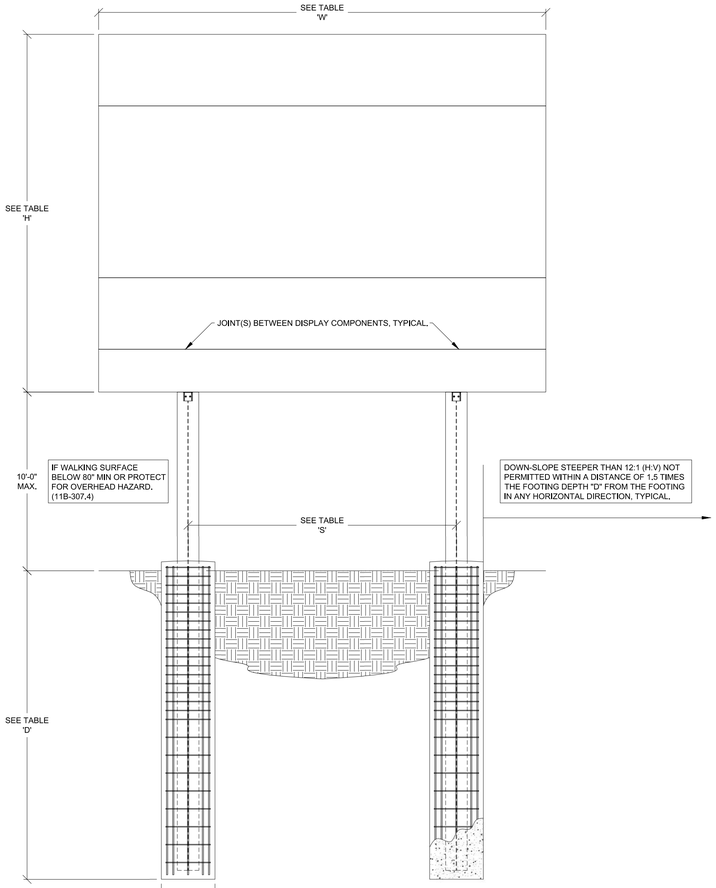

FRONT ELEVATION VIEW

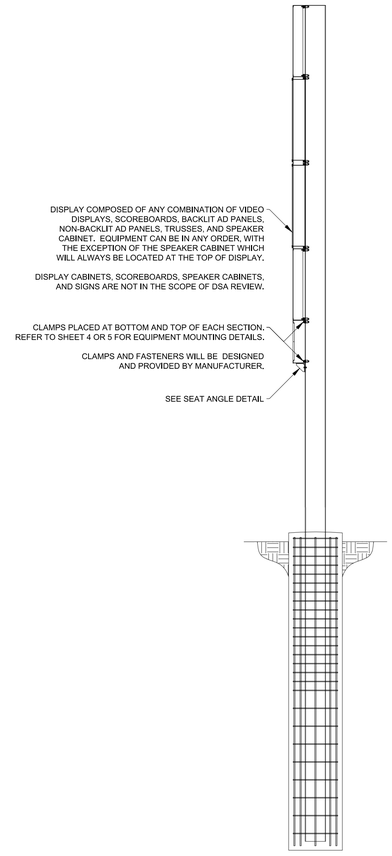

SCOREBOARD SIDE ELEVATION VIEW
SEE SHEET 4 FOR MOUNTING DETAILS

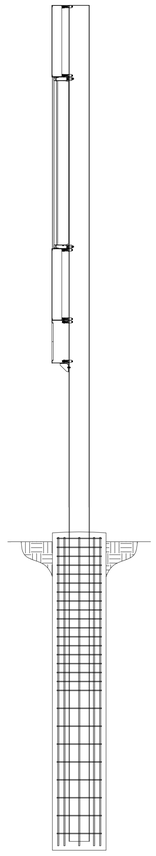

VIDEO DISPLAY SIDE ELEVATION VIEW
SEE SHEET 5 FOR MOUNTING DETAILS

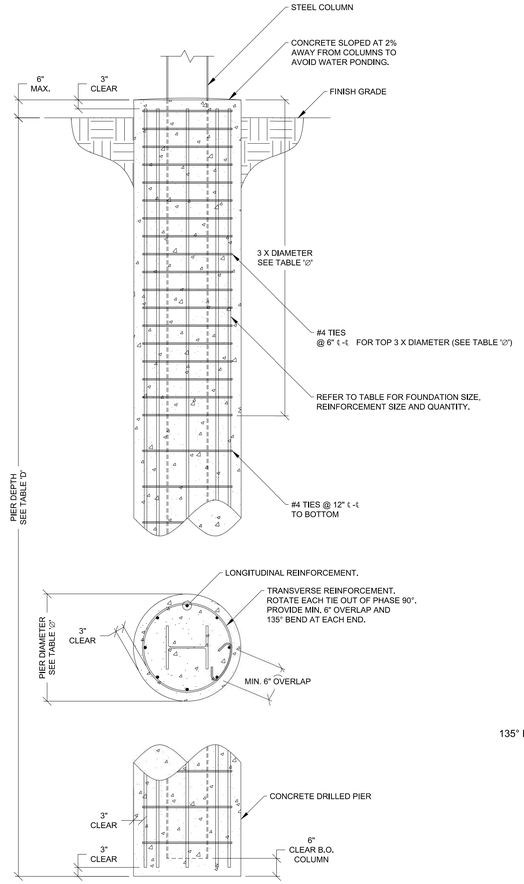

CONCRETE DRILLED PIER - SIDE PLAN VIEW
N.T.S.

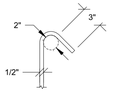

135° BEND DETAIL FOR #4 REBAR TIE

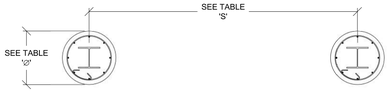

FOUNDATION PLAN VIEW

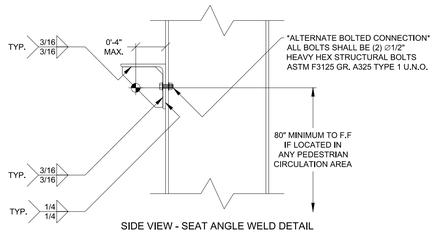

SIDE VIEW - SEAT ANGLE WELD DETAIL

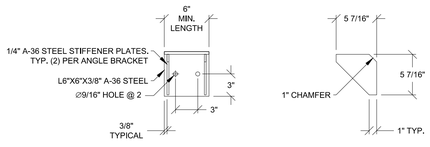

SEAT ANGLE DETAIL
MAXIMUM CAPACITY = 5,750 LBS. PER SEAT
SEAT ANGLE IS REQUIRED AT BOTTOM OF DISPLAY STACKS TYPICAL AT EACH COLUMN

TABLE A - STANDARD WIND REGIONS (100 MPH)

CHECK OPTION	OVERALL DIMENSIONS			COLUMNS		PIER FOOTINGS			WIND			SEISMIC
	"MAX. HEIGHT 'H' (FT)"	"MAX. WIDTH 'W' (FT)"	MAX. DISPLAY WEIGHT (LBS)	"SPACING 'S' (FT)"	SIZE	"DIAMETER 'Ø' (FT)"	"DEPTH 'D' (FT)"	"LONG. REINF. (QTY - SIZE)"	Kz	Cf	"DESIGN WIND PRESSURE (LBS/SQFT)"	"BASE SHEAR (LBS)"
	8.00	16.00	2386.00	10.00	W8X24	3	8.25	(7) #8	0.88	1.73	28.19	1680
	12.00	16.00	3154.00	10.00	W10X33	3	10	(7) #8	0.92	1.71	29.11	2380
	16.00	16.00	3922.00	10.00	W10X45	3	11.5	(7) #8	0.95	1.69	29.83	3080
	20.00	16.00	4690.00	10.00	W12X58	3	13.5	(7) #8	0.98	1.68	30.56	4060
	8.00	20.00	2770.00	12.00	W12X26	3	9	(7) #8	0.88	1.73	28.19	1960
	12.00	20.00	3730.00	12.00	W10X39	3	10.75	(7) #8	0.92	1.69	28.83	2800
	16.00	20.00	4690.00	12.00	W10X49	3	12.75	(7) #8	0.95	1.68	29.61	3500
	20.00	20.00	5650.00	12.00	W12X65	3	15.5	(7) #8	0.98	1.67	30.28	4620
	24.00	20.00	6610.00	12.00	W12X79	3	18.25	(7) #8	1.01	1.66	31.03	5740
	12.00	25.50	4522.00	15.00	W16X45	3	11.75	(7) #8	0.92	1.68	28.55	3080
	16.00	25.50	5746.00	15.00	W12X53	3	14.75	(7) #8	0.95	1.66	29.31	4200
✔	20.00	25.50	7670.00	15.00	W14X74	3	17.75	(7) #8	0.98	1.65	30.03	5600
	24.00	25.50	8894.00	15.00	W14X90	3	21	(7) #8	1.01	1.64	30.66	7000
	28.00	25.50	10118.00	15.00	W14X109*	4	20.25	(12) #8	1.03	1.64	31.33	8540
	32.00	25.50	11342.00	15.00	W18X143*	4	22.75	(12) #8	1.05	1.64	31.97	10780
	36.00	25.50	12566.00	15.00	W27X161*	4	25.5	(12) #8	1.07	1.64	32.56	12740

TABLE B - SPECIAL WIND REGIONS (130 MPH)

CHECK OPTION	OVERALL DIMENSIONS			COLUMNS		PIER FOOTINGS			WIND			SEISMIC
	"MAX. HEIGHT 'H' (FT)"	"MAX. WIDTH 'W' (FT)"	MAX. DISPLAY WEIGHT (LBS)	"SPACING 'S' (FT)"	SIZE	"DIAMETER 'Ø' (FT)"	"DEPTH 'D' (FT)"	"LONG. REINF. (QTY - SIZE)"	Kz	Cf	"DESIGN WIND PRESSURE (LBS/SQFT)"	"BASE SHEAR (LBS)"
	8.00	16.00	2386.00	10.00	W12X30	3	10	(7) #8	0.88	1.73	47.64	1820
	12.00	16.00	3154.00	10.00	W12X40	3	12.25	(7) #8	0.92	1.71	49.20	2520
	16.00	16.00	3922.00	10.00	W12X53	3	15.25	(7) #8	0.95	1.69	50.41	3360
	20.00	16.00	4690.00	10.00	W12X72	3	18.75	(7) #8	0.98	1.68	51.68	4480
	8.00	20.00	2770.00	12.00	W10X33	3	11	(7) #8	0.88	1.73	47.64	2100
	12.00	20.00	3730.00	12.00	W14X48	3	13.75	(7) #8	0.92	1.69	48.72	2940
	16.00	20.00	4690.00	12.00	W14X61	3	17.5	(7) #8	0.95	1.68	50.04	3920
	20.00	20.00	5650.00	12.00	W14X82*	3	21.25	(7) #8	0.98	1.67	51.17	5180
✔	24.00	20.00	6610.00	12.00	W14X99	4	21	(12) #8	1.01	1.66	52.44	6440
	12.00	25.50	4522.00	15.00	W14X53	3	16	(7) #8	0.92	1.68	48.25	3360
	16.00	25.50	5746.00	15.00	W16X67	3	20.25	(7) #8	0.95	1.66	49.53	4480
	20.00	25.50	7670.00	15.00	W14X90	4	20.5	(12) #8	0.98	1.65	50.75	6020
	24.00	25.50	8894.00	15.00	W24X117*	4	24.25	(12) #8	1.01	1.64	51.82	7840
	28.00	25.50	10118.00	15.00	W14X145*	4	28	(12) #8	1.03	1.64	52.95	9800
	32.00	25.50	11342.00	15.00	W30X173*	5	27.50	(19) #8	1.05	1.64	54.03	12040
	36.00	25.50	12566.00	15.00	W33X201*	5	30.75	(19) #8	1.07	1.64	55.02	14560

(1) PER ASCE7 CASE B LOADING. CASE B LOADING = (CASE A LOADING) X (1.67). THE PRESSURES HAVE BEEN MULTIPLIED BY 0.6 (ASD LOAD FACTOR).
(2) 0.7V PER ASCE7-16 ASD EQUATIONS.
(3) COLUMN MAY BE SPLICED WITH A PREQUALIFIED CJP WELD.
(*) MAY NEED LONGER BOLTS FOR CLAMP ATTACHMENTS.

PRE-CHECK (PC) DOCUMENT

CODE: 2022 CBC

A SEPARATE PROJECT APPLICATION FOR CONSTRUCTION IS REQUIRED.

VECTOR ENGINEERS
WELLS L. HOLMES, S.E.
651 W. GALENA PARK BLVD. STE. 101
DRAPER, UTAH 84020
(801) 990-1775
(801) 990-1776 FAX

REGISTERED PROFESSIONAL ENGINEER WELLS HOLMES S.E. 5203 STRUCTURAL STATE OF CALIFORNIA

08/07/2023

STRUCTURAL ENGINEER OF RECORD

APPROVED
DIV. OF THE STATE ARCHITECT
APP: 04-122194 PC
REVIEWED FOR
SS ☑ FLS ☑ ACS ☑ CG ☐
DATE: 09/18/2023

PROJECT-SPECIFIC APPROVALS

PRE-CHECK (PC) DOCUMENT
Code: 2022 CBC
A separate project application for construction is required.

THE CONCEPTS EXPRESSED AND DETAILS SHOWN ON THIS DRAWING ARE CONFIDENTIAL AND PROPRIETARY. DO NOT REPRODUCE BY ANY MEANS WITHOUT THE EXPRESS WRITTEN CONSENT OF DAKTRONICS, INC. OR ITS WHOLLY OWNED SUBSIDIARIES. COPYRIGHT 2020 DAKTRONICS, INC. ALL RIGHTS RESERVED.

THIRD ANGLE PROJECTION

PROJECT:	2022 CBC DSA PRE-CHECK DRAWINGS		
TITLE:	SHEET 9, 2-COLUMN STRUCTURE W/ PIER FOUNDATIONS		
DATE:	8 MAR 23	DIM UNITS: INCHES [MILLIMETERS]	SHEET: 9
SCALE:	1/8" = 1'-0"	DO NOT SCALE DRAWING	REV: A
DESIGN:	KKURTEN	JOB NO. P2236	FUNC - TYPE - SIZE: F - 10 - D
DRAWN:	SEASTMA		5224624